Airedale
APPLIED THERMAL INNOVATION

TurboChill™

Air Cooled (TCC) and FreeCool (TCF) Chiller

200kW to 1360kW

R1234ze(E)
Spray Evaporator

Technical Manual

ecoDesign COMPLIANT

CE

bsi. ISO 9001 Quality Management FM00542 ISO 14001 Environmental Management EMS52086

Warranty, Commissioning & Maintenance

As standard, Airedale guarantees all non consumable parts only for a period of 12 months, variations tailored to suit product and application are also available; please contact Airedale for full terms and details.

To further protect your investment in Airedale products, Airedale can provide full commissioning services, comprehensive maintenance packages and service cover 24 hours a day, 365 days a year (UK mainland).

For a free quotation contact Airedale or your local Sales Engineer.

All Airedale products are designed in accordance with EU Directives regarding prevention of build up of water, associated with the risk of contaminants such as Legionella.

For effective prevention of such risk it is necessary that the equipment is maintained in accordance with Airedale recommendations.

ChillerGuard™

In addition to commissioning, a 24 hour, 7 days a week on-call service is available throughout the year to UK mainland sites. This service will enable customers to contact a duty engineer outside normal working hours and receive assistance over the telephone. The duty engineer can, if necessary, attend site, usually within 24 hours or less.

Full details will be forwarded on acceptance of the maintenance agreement.

CAUTION ⚠	Warranty cover is not a substitute for maintenance. Warranty cover is conditional to maintenance being carried out in accordance with the recommendations provided during the warranty period. Failure to have the maintenance procedures carried out will invalidate the warranty and any liabilities by Airedale International Air Conditioning Ltd.

Spares

A spares list for 1, 3 and 5 years will be supplied with every unit and is also available from our Spares department on request.

Training

As well as our comprehensive range of products, Airedale offers a modular range of Refrigeration and Air Conditioning Training courses, for further information please contact Airedale.

Customer Services

For further assistance, please e-mail: enquiries@airedale.com or telephone:

UK Sales Enquiries	+ 44 (0) 113 239 1000	enquiries@airedale.com
International Enquiries	+ 44 (0) 113 239 1000	enquiries@airedale.com
Spares Hot Line	+ 44 (0) 113 238 7878	spares@airedale.com
Airedale Service	+ 44 (0) 113 239 1000	service@airedale.com
Technical Support	+ 44 (0) 113 239 1000	tech.support@airedale.com
Training Enquiries	+ 44 (0) 113 239 1000	training@airedale.com

For information, visit us at our Web Site: www.airedale.com

Airedale Ltd. endeavours to ensure that the information in this document is correct and fairly stated, but none of the statements are to be relied upon as a statement or representation of fact. Airedale Ltd. does not accept liability for any error or omission, or for any reliance placed on the information contained in this document. The development of Airedale products and services is continuous and the information in this document may not be up to date. It is important to check the current position with Airedale Ltd. at the address stated. This document is not part of a contract or licence unless expressly agreed. No part of this document may be reproduced or transmitted in any form or by any means, electronic or mechanical, including photocopying, recording, or information storage and retrieval systems, for any purpose other than the purchaser's personal use, without the express written permission of Airedale Ltd.

© 2019 Airedale International Air Conditioning Limited. All rights reserved. Printed in the UK.

Warranty

All Airedale products or parts (non consumable) supplied for installation within the UK mainland and commissioned by an Airedale engineer, carry a full Parts & Labour warranty for a period of 12 months from the date of commissioning or 18 months from the date of despatch, whichever is the sooner. Parts or Equipment supplied by Airedale for installation within the UK or for Export that are properly commissioned in accordance with Airedale standards and specification, not commissioned by an Airedale engineer; carry a 12 month warranty on non consumable Parts only from the date of commissioning or 18 months from the date of despatch, whichever is the sooner. Parts or equipment installed or commissioned not to acceptable Airedale standards or specification invalidate all warranty.

Warranty is only valid in the event that

In the period between delivery and commissioning the equipment,

- is properly protected & serviced as per the Airedale installation & maintenance manual provided
- where applicable the glycol content is maintained to the correct level.

In the event of a problem being reported and once warranty is confirmed* as valid under the given installation and operating conditions, the Company will provide the appropriate warranty coverage (as detailed above) attributable to the rectification of any affected Airedale equipment supplied (excluding costs for any specialist access or lifting equipment that must be ordered by the customer).

*Once warranty is confirmed, maintenance must be continued to validate the warranty period.

Any spare part supplied by Airedale under warranty shall be warranted for the unexpired period of the warranty or 3 months from delivery, whichever period is the longer. To be read in conjunction with the Airedale Conditions of Sale - Warranty and Warranty Procedure, available upon request.

Procedure

When a component part fails, a replacement part should be obtained through our Spares department. If the part is considered to be under warranty, the following details are required to process this requirement. Full description of part required, including Airedale's part number, if known. The original equipment serial number. An appropriate purchase order number. A spares order will be raised under our warranty system and the replacement part will be despatched, usually within 24 hours should they be in stock. When replaced, the faulty part must be returned to Airedale with a suitably completed and securely attached "Faulty Component Return" (FCR) tag. FCR tags are available from Airedale and supplied with each Warranty order. On receipt of the faulty part, suitably tagged, Airedale will pass to its Warranty department, where it will be fully inspected and tested in order to identify the reason for failure, identifying at the same time whether warranty is justified or not. On completion of the investigation of the returned part, a full "Report on Goods Returned" will be issued. On occasion the release of this complete report may be delayed as component manufacturers become involved in the investigation. When warranty is allowed, a credit against the Warranty invoice will be raised. Should warranty be refused the Warranty invoice becomes payable on normal terms.

Exclusions

Warranty may be refused for the following reasons:

- Misapplication of product or component.
- Incorrect site installation.
- Incomplete commissioning documentation.
- Inadequate site installation.
- Inadequate site maintenance.
- Damage caused by mishandling.
- Replaced part being returned damaged without explanation.
- Unnecessary delays incurred in return of defective component.

Returns Analysis

All faulty components returned under warranty are analysed on a monthly basis as a means of verifying component and product reliability as well as supplier performance. It is important that all component failures are reported correctly.

Health and Safety

IMPORTANT

The information contained in this manual is critical to the correct operation and maintenance of the unit and should be read by all persons responsible for the installation, commissioning and maintenance of this Airedale unit.

Safety

The equipment has been designed and manufactured to meet international safety standards but, like any mechanical / electrical equipment, care must be taken if you are to obtain the best results.

CAUTION ⚠	When working with any air conditioning units, ensure that the electrical isolator is switched off prior to servicing or repair work and that there is no power to any part of the equipment. Also ensure that there are no other power feeds to the unit such as fire alarm circuits, BMS circuits, crankcase heater permanent supplies etc. Electrical installation commissioning and maintenance work on this equipment should be undertaken by competent and trained personnel in accordance with local relevant standards and codes of practice. These Airedale chillers use R1234ze(E) refrigerant which requires careful attention to proper storage and handling procedures in accordance with EN 378. Maximum water temperature flowing through the chiller should be 40°C. All service personnel must have hydrocarbon refrigerant handling training.

Personal Refrigerant Leak Detector

Personal refrigerant leak detectors must be worn when servicing this machine.

Service Equipment

All service personnel must have refrigerant handling training. They must use only manifold gauge sets designed for use with refrigerants. Use only refrigerant recovery units and cylinders designed for the pressure category of the refrigerants. The refrigerant used in this range of products is classified under the COSHH regulations as an irritant, with set Workplace Exposure Levels (WEL) for consideration if this plant is installed in confined or poorly ventilated areas. A full hazard data sheet in accordance with COSHH regulations is available should this be required. Refrigerants must only be charged in the liquid state and must be stored in a clean, dry area away from sunlight. The refrigerant must never be stored above 50°C.

Global Warming Potential

R1234ze(E) refrigerant has a GWP of 7 (Based on EN378-1:2016, 100 year life).

Pressure Equipment Directive

Minimum and Maximum Operation Temperature (TS) and Pressure (PS)

Refrigeration

AllowableTemperature Range (TS) = Min -20°C* to Max 120°C**

Maximum Allowable Pressure (PS) = High Side 13.0 Barg Low side 10.3 Barg

*Based on the refrigerant temperature in the unit off state in the lowest permitted ambient temperature.

**Based on the maximum allowable super heated refrigerant temperature.

Waterside

AllowableTemperature Range (TS) = Min -20°C* to Max 40°C**

Maximum Allowable Pressure (PS) = 10.0 Barg

*Based on the water temperature in the unit off state in the lowest permitted ambient temperature.

*Based on the waterside temperature in the unit off state in the highest permitted ambient temperature.

Pressure System Safety Regulations 2000

Refrigeration assemblies/systems may constitute a Pressure System as defined in the Pressure System Safety Regulations 2000.

Ecodesign Directive 2009/125/EC

The product range within this document is designed in accordance with the European Ecodesign Directive 2009/125/EC. The Ecodesign Appendix at the end of the document details the products MEPS (Minimum Efficiency Performance Standards). Products sold outside of the EU are exempt from this directive.

Protective Personal Equipment

Airedale recommends that personal protective equipment is used whilst installing, maintaining and commissioning equipment.

Manual Handling

Some operations when servicing or maintaining the unit may require additional assistance with regard to manual handling. This requirement is down to the discretion of the engineer. Remember do not perform a lift that exceeds your ability

Safe Operating Limits

The TurboChill R1234ze(E) chiller has operating limits set to ensure that the refrigerant does not become unstable. Certain aspects of the installation and design must be considered.
The installation of the unit is subject to various design aspects, see below.

Flammability

In the event of a leak the combination of the following 3 operating conditions detailed in the fire triangle MUST be avoided at all times. Failure to do this could cause a fire.

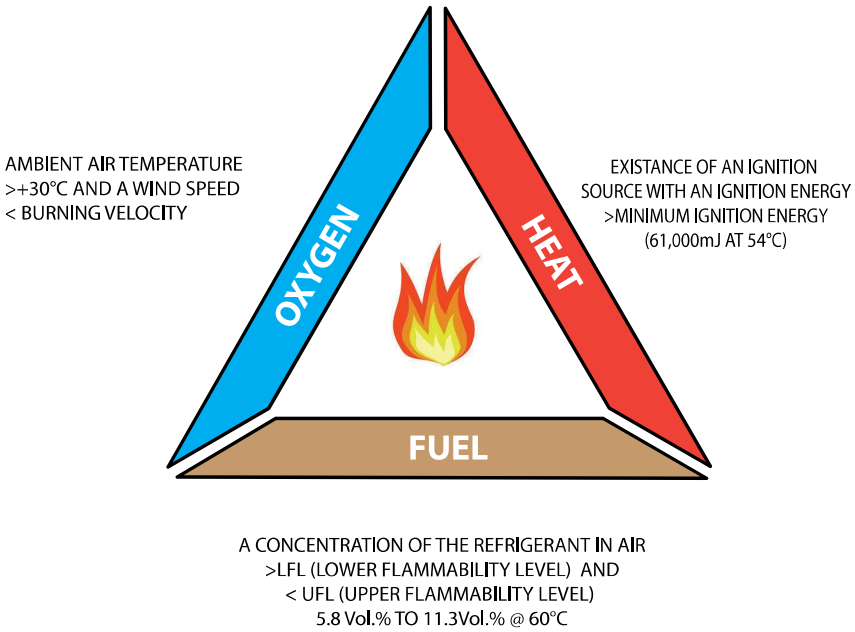

CAUTION ⚠	This refrigerant is not flammable as per the Material Safety Data Sheet (MSDS) “Hazards Identification” supplied by the refrigerant manufacturer.

No smoking or naked flame.

CAUTION PACEMAKER WEARERS
To avoid any risk of injury, any work to be carried out on or around the compressor should be done with personnel that do not have pacemakers fitted.

CAUTION ⚠	Care must be taken when working around the discharge pipework of the unit. High surface temperatures may exist during unit operation. The refrigerant has a boiling point of -19°C.

Electromagnetic Compatability (EMC)

CAUTION ⚠	Units without compressor enclosures are class A group 1 products and are only intended to be used at locations where there is a distance greater than 30m between the equipment and third party sensitive radio communication equipment.

Environmental Considerations

Freeze Protection

Airedale recommends the following actions to help protect the unit during low temperature operation. This also includes the units subject to low ambient temperatures.

Units with supply water temperatures below +5°C

Glycol is recommended when a supply water temperature of +5°C or below is required or when static water can be exposed to freezing temperatures.

Units subject to ambient temperatures lower than 0°C, a minimum of 1 of the following is required:

1. Glycol of an appropriate concentration (1) is used within the system to ensure adequate protection.
   Please ensure that the concentration is capable of protection at least 3K lower than the minimum operating ambient.
2. Ensure water/glycol solution is constantly circulated through all waterside pipework and coils to prevent static water from freezing.
3. Ensure that pumps are started and running even during shut down periods, when the ambient is within 3K of the solution freeze point (1) (i.e. if the solution freezes at 0°C, the pump must be operating at 3°C ambient).(2)
4. Additional trace heating is provided for interconnecting pipework.

(1) Refer to your glycol supplier for details.

(2) An actuated suction ball valve shall be fitted to protect the compressor from liquid migration.

Free Cooling Chillers

A minimum of 20% glycol concentration must be applied to all free cooling chillers. Concentration should be increased so that its capable of protection at least 3K lower than the minimum operating ambient.

Flow Control

Care to be taken when selecting a chiller within 5% of the evaporator minimum flow rate. The end user **must** ensure that flow variation does not fall below this minimum as the chiller will shut down.

Environmental Policy

It is our policy to:

- Take a proactive approach to resolve environmental issues and ensure compliance with regulatory requirements.
- Train personnel in sound environmental practices.
- Pursue opportunities to conserve resources, prevent pollution and eliminate waste.
- Manufacture products in a responsible manner with minimum impact on the environment.
- Reduce our use of chemicals and minimise their release to the environment.
- Measure, control and verify environmental performance through internal and external audits.
- Continually improve our environmental performance.

CE Directive

Airedale certify that the equipment detailed in this manual conforms with the following EC Directives:

Electromagnetic Compatibility Directive (EMC)	2014/30/EU
Machinery Directive (MD)	89/392/EEC version 2006/42/EC
Pressure Equipment Directive (PED)	2014/68/EU
Ecodesign	2009/125/EC

To comply with these directives appropriate national & harmonised standards have been applied. These are listed on the Declaration of Conformity, supplied with each product.

Occupancy Note

When placing a Chiller the access category for the surrounding area needs to be classified in accordance with EN 378-1:2016 section 5.1.1. In most cases the access would be ‘Authorized Access’ as described in EN 378-1:2016 Table 4. This access level needs to be confirmed by the end user. As well as the above the location within which the product is to be installed also needs to be defined so that the correct charge limitations can be calculated. EN 378-1:2016 section 5.3 describes the four main types of location and the hazards associated with each. Given that an air cooled Chiller is typically an ‘Authorized Access’ installation and is most often installed in open air, ‘Class III’ location, EN 378-1:2016 Table C.2 states that there is ‘No charge restriction’ for these systems using R1234ze (A2L) refrigerant.

Contents

Warranty, Commissioning & Maintenance **2**
- ChillerGuard™ 2
- Customer Services 2
- Warranty 3

Health and Safety **4**
- Personal Refrigerant Leak Detector 4
- Pressure Equipment Directive 4
- Safe Operating Limits 5
- Environmental Considerations 6

Nomenclature **10**

Unit Overview **12**

Unit Components **14**
- Refrigeration 14
- Turbocor Compressor 16
- Condenser 17
- Electrical 18
- Condenser Fans 20
- Waterside 21
- Controls 25
- Mechanical 29

Design Features & Information **31**
- Specific Heat Capacity (SHC) 31
- Minimum System Water Volume Calculations 31
- Performance Effects of Glycol 33
- Measurement of Sound Data 34
- Pressure Relief Valve Discharge Piping 35
- Water System 35
- Standard Recommended Installation 35
- Water Systems and Recommended Flow Schemes 36

Technical Data TCC **39**
- Mechanical and Elecrical Data 39
- Sound Data 45

Technical Data - TCF **47**
- Mechanical and Electrical Data 47
- Sound Data 53

Contents

Hydronic Data **55**
Evaporator Pressure Drop - 100% Water 55
Evaporator Pressure Drop - 20% Ethylene Glycol 56
Strainer Pressure Drop - 100% Water 57
Strainer Pressure Drop - 20% Ethylene Glycol 57
Installation Data **58**
Air Cooled Masses & Centre of Gravity (C of G) 58
Freecool Masses & Centre of Gravity (C of G) 59
Point Loadings 60
Unit Lifting 62
Dimensions 64
Positioning 65
Airflow & Maintenance Clearances 65
Anti Vibration Mounting (Optional) 66
Interconnecting Wiring 68
pLAN termination 69
Power Quality & Harmonics 70
Pre Start Checks **71**
pCO5+ Built In Display and Keypad 72
Unit Operation **73**
Restarting the Unit 73
Changing the Setpoint 74
Enabling Pumps 75
Maintenance **76**
General Inspections 76
Electrical Inspection 77
Refrigeration 78
Waterside 79
Controls 80
System 81
Appendix - Ecodesign **82**
Ecodesign - TCC (R) 83
Ecodesign - TCC (X) 86
Ecodesign - TCF (R) 89
Ecodesign - TCF (X) 92

Intentionally Blank

Nomenclature

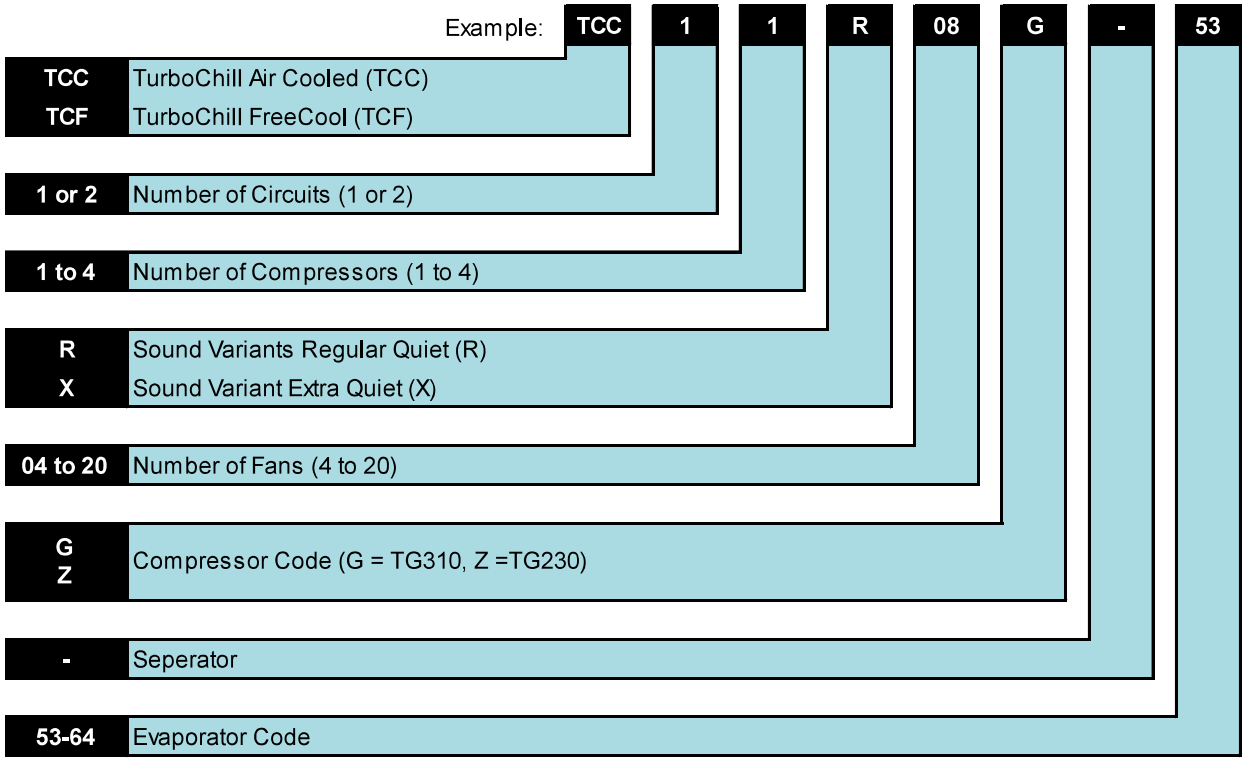

Introduction

The Airedale range of TurboChill air cooled and Free cool liquid chillers uses the technologically superior centrifugal Turbocor compressors. Designed to cover the high capacity range between 200kW and 1360kW.

Each model is individually selected to provide the optimum solution for each application by offering maximum flexibility and matching customer requirements in terms of:

- Capacity.
- EER/ ESEER (Energy Efficiency Ratio and European Seasonal Energy Efficiency ratio).
- Sound Levels - Quiet (R) and Extra Quiet (X).
- Footprint.

For guidance the unit's information within this manual has been generated at nominal conditions, due to the unit's ability to modulate capacity individually tailored unit solutions are available on request. Please contact Airedale with your specific requirements and we will be pleased to provide you with an individually tailored selection and technical specification.

Construction

The base shall be fabricated from galvanised steel to ensure a rigid, durable, weatherproof construction.
Unit panels shall be manufactured from galvanised sheet steel coated with epoxy baked powder paint to provide a durable and weatherproof finish. Standard unit colour shall be Light Grey (RAL 7035).

Free Cooling Operation

The TurboChill Free Cool chiller has been designed to provide the cooling load required whilst optimising energy efficiency at all times and as such will take advantage of free cooling whenever available. If the free cooling available cannot satisfy the required full cooling load, direct expansion cooling is used to supplement the output.
In high ambients where free cooling is not available the fan speed modulates in the conventional manner to maintain an optimised head pressure. Free cooling is initiated wherever the outdoor ambient is 2K less than the return water temperature. During concurrent cooling mode the condensing temperature is constantly monitored and intelligently kept within the compressor envelope to allow the fans to run as fast as possible and therefore achieve the most free-cooling without having a negative impact on compressor integrity.
In ambients where the free cooling coil is capable of meeting the full cooling demand, the condenser fans are modulated to provide the desired duty. The condenser fans are capable of being modulated between 15-100% (EC) or 40% - 100% (AC) of airflow to maintain the supply water temperature. During periods where the condenser fan speed has been reduced to a minimum, the supply water temperature will then be controlled by the 3 way valve.

Free Cooling vs. Mechanical Cooling

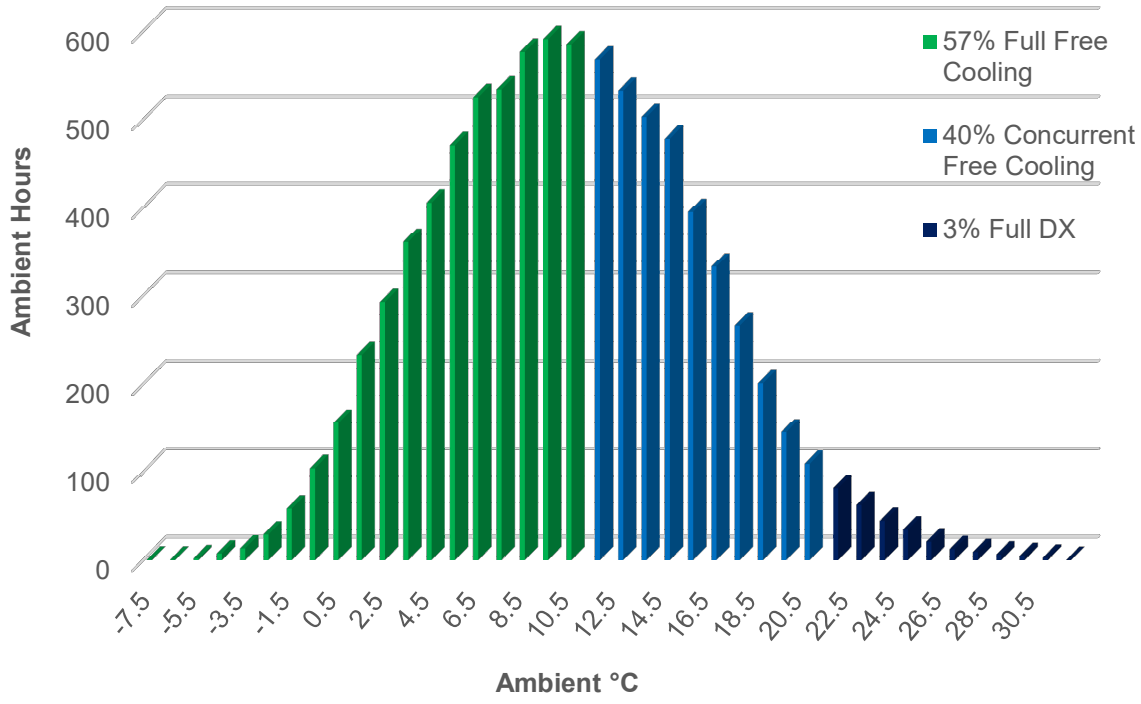

Unit Overview

Airflow

- EC Condenser Fans
- AC Condenser Fans
- High Airflow EC Condenser Fans
- No Discharge Plenum
- 300mm Fan Discharge Plenum
- 500mm Extended Height Fan Discharge Plenum

Electrical Panel

- Single Point 3 Phase Isolation
- UltraCap Power Backup
- Control Panel Heater
- Panel Ventilation
- Emergency Stop
- Power Monitoring
- Weatherproof Rain Hood

Controls

- Microprocessor
- Leak Detection
- Inteligent Head Pressure Control

Coils

- Epoxy Coated Microchannel Condenser Coils
- RTPF Free Cooling Coils

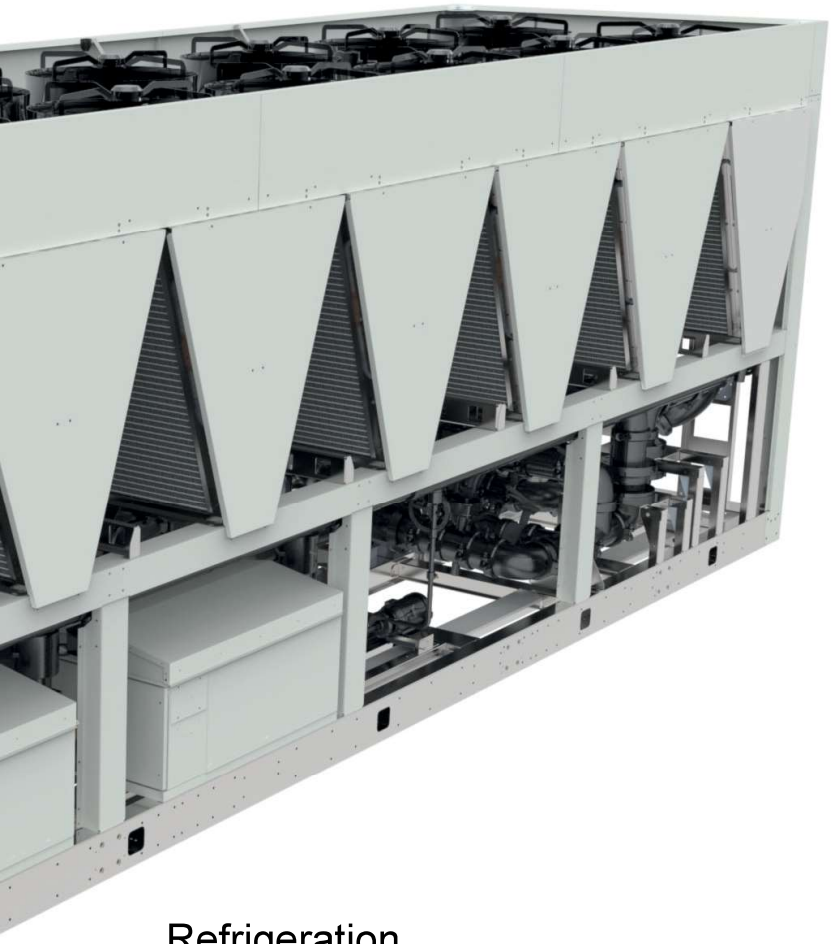

Waterside

- Differential Pressure Sensor
- Flow Switch
- Pump Interlock
- Water Filter
- Various Pump Options
- Immersion Heaters
- Grooved and Clamped Type Connections

Refrigeration

- Centrifugal Compressors
- Spray Flooded Evaporator
- Actuated Suction Ball Valves
- Liquid and Discharge Shut Off Valves
- Liquid Line Sight Glasses
- Micro-Plate Economiser
- Dual Pressure Relief Valves
- Ventilated Compressor Enclosure upon Refrigerant Leak Detection

Unit Components

Refrigeration

Refrigeration	TCC	TCF
Compressors - Turbocor Centrifugal	●	●
Dual Maintainable Pressure Relief Valves	●	●
Microchannel Epoxy Coated Condensing Coils	●	●
RTPF Free Cooling Coils	-	●
Epoxy Coated RTPF Free Cooling Coils	-	○
Modulating Starting Line Assembly	●	●
Filter Driers with Replaceable Cores	●	●
Electronic Expansion Valves	●	●
Spray Flooded Evaporator	●	●
Stainless Steel Suction Pipe Assembly	●	●
Full Operating Charge of R1234ze(E)	●	●
Acoustically Lined Compressor Enclosure(s)	○	○
Ventilated Compressor Enclosure	○	○
Liquid and Discharge Shut Off Valves	●	●
Liquid Line Sight Glasses (integral to EEV)	●	●
Micro-plate Economiser	○	○
Actuated Suction Ball Valve(s)*	●	●
Large capacity filter drier(s) with replaceable cores	●	●
Liquid line sight glasses	●	●
Low pressure switch with auto reset	●	●
2 High pressure switches with auto reset per compressor	●	●
High ambient starting valves	●	●
Suction and liquid pressure transducers	●	●
Discharge check (non return) valve(s)	●	●

● Standard features ○ Optional features — Feature not available

CAUTION ⚠	* Feature required if unit is to be shut down for winter with water still circulating through unit, for freeze protection. The actuated suction ball valve is to stop liquid migration and protect the compressor.

Evaporator

Spray flooded evaporator technology used to dramatically reduce unit refrigerant charge by up to 50% whilst maintaining efficiency close to traditional fully flooded evaporators. This reduction in refrigerant charge within the evaporator means that capacitive liquid level technology is no longer required to regulate evaporator efficiency. The heat exchanger is insulated with closed cell polyurethane foam which is to class “O” fire rating and the material is UV resistant. The flooded evaporator results in significant energy savings in compressor operation particularly at part load.

Two immersion heater(s) and thermostat protect the evaporator against freeze up in ambient temperatures down to -20°C. (in compliance with Airedale freeze protection policy). Connections for external trace heating rated at 230V/500W is available. Compressors and evaporator shall be mounted on a rigid galvanised heavy duty sub frame.

Actuated Suction Ball Valve(s)

To protect the compressors against liquid migration, actuated suction line ball valves are fitted. This protects the compressors when there is no cooling demand by keeping the refrigerant in the evaporator, even if water is still flowing through the unit. This option also allows partial pumpdown of the system refrigerant charge into the evaporator where it is isolated in the event of a leak. Partial pumpdown is only available with the actuated suction ball valve option fitted.

Economiser Circuit for Increased Part Load Efficiency

The addition of an economiser circuit provides increased cooling and enhances EER, in full and part load operation. Sub cooled liquid is expanded using a dedicated EEV (electronic expansion valve) to medium pressure, and passed through one side of a plate heat exchanger, whilst on the other side flows the ‘normal’ pressure liquid.
The result is that the sub cooling of the liquid entering the system EEV is increased, which improves evaporator performance and at the same time the suction pressure within the compressor body is lifted, improving compressor efficiency.

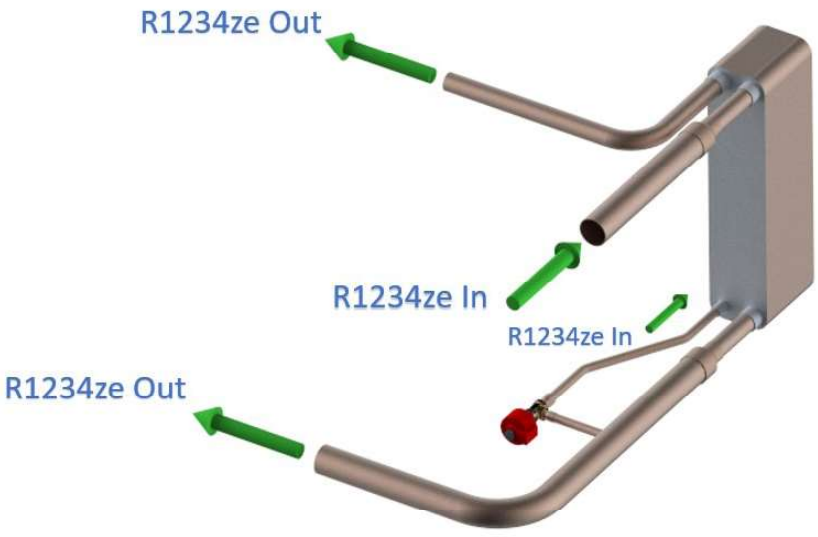

Turbocor Compressor

Each installed compressor comes with the following components:

- Suction and discharge shut off valves.
- Discharge non-return valve.
- Line reactor (for removing additional impedance harmonics and voltage spikes in the AC waveform).
- EMI/EMC filter:
  - AC-DC rectifier.
  - DC capacitors.
  - DC-AC (IGBT) converter.
  - Motor/bearing management system and incorporated surge protection.
  - Soft start module.
  - Magnetic bearing system.
  - Vibration reducing isolating rubber mounts.
  - Linear capacity modulation is provided by a variable frequency drive.

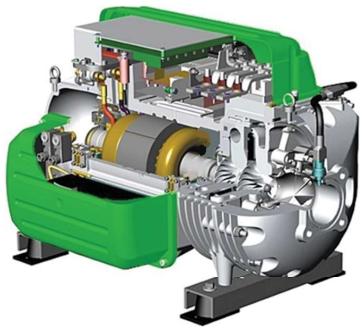

Key benefits of Turbocor compressor technology:

- Oil Free Operation:
  - More efficient heat exchange.
  - No oil entrainment issues – pipe work can be optimised for performance not oil return.
- Small and light, only 120kg or 132kg (compressor size dependant).
- Turbocor compressor shaft and impellers levitate on a magnetic cushion eliminating friction and vibration resulting in the compressor running at a smooth and reduced sound spectrum.
- The TurboChill compressor's variable speed control offers 2 major benefits:
  - Uses substantially less power at part load and gives accurate set-point control and exact capacity match.
  - The inbuilt electronic soft start produces a very low starting current of just 2A and eradicates the need to oversize electrical supply components on site.

Condenser

Large surface area microchannel coil(s) (ideally positioned to optimise airflow and heat transfer) shall be manufactured as a “V-block” arrangement. This microchannel “V-block” arrangement has a lower airside pressure drop than a traditional round tube plate fin heat exchanger making the fans run more efficiently. The coils have free flowing liquid drains that enable us to reduce the amount of subcooling done in the coil, leaving more area for heat exchange

R1234ze(E) Leak Detection System

A factory calibrated leak detection system shall be fitted as standard to units. A dedicated refrigerant sensor shall be fitted in close proximity to each evaporator circuit and will raise an alarm on detection of refrigerant gas.

Refrigerant Isolation

To maintain the functionality of the refrigerant partial pump down and isolation strategy in the event of a power failure. This 24V actuator will be connected to a single phase permanent supply so that in the event of a power failure the evaporator is isolated. Ensure single phase power supply is connected permanently to ensure that the system will isolate refrigerant and ventilate the compressor housing in the event of a leak being detected. A UPS permanent supply is required.

Maintainable Dual Pressure Relief Valve

An auto resetting pressure relief valve assembly shall be provided per evaporator circuit, opening on pressure rise above 10.3 barg. The dual shut-off valve assembly incorporates 2 pressure relief valves which can be individually shut off via a 3 way valve. This allows the maintenance of individual pressure relief valves without any requirement for refrigerant evacuation. Rupture discs are also fitted on systems with a refrigerant circuit charge larger than 300kg in line with EN 378-2:2016 clause 6.2.6.5. In accordance with EN13136:2013, pressure relief valves have been sized to ensure that in the event of fire they can prevent excessive build-up of pressure within the evaporator. EN13136:2013 section 6.2.1 has been used to size valves accordingly.

Fire is a hazard that these units have not been designed to operate under. However, the inclusion of various safety devices ensures that any damage due to fire is limited via the release of pressure in the form of gas discharge.

If concerns of the ability of the pressure relief valve to discharge in the event of a fire >107°C exist, then it is the responsibility of the end user to protect the pressure relief valve assembly from excessive external temperatures.

This must however allow the pressure relief valve to discharge effectively and not act as a ‘choke’ (offer any resistance) when discharging.

Electrical

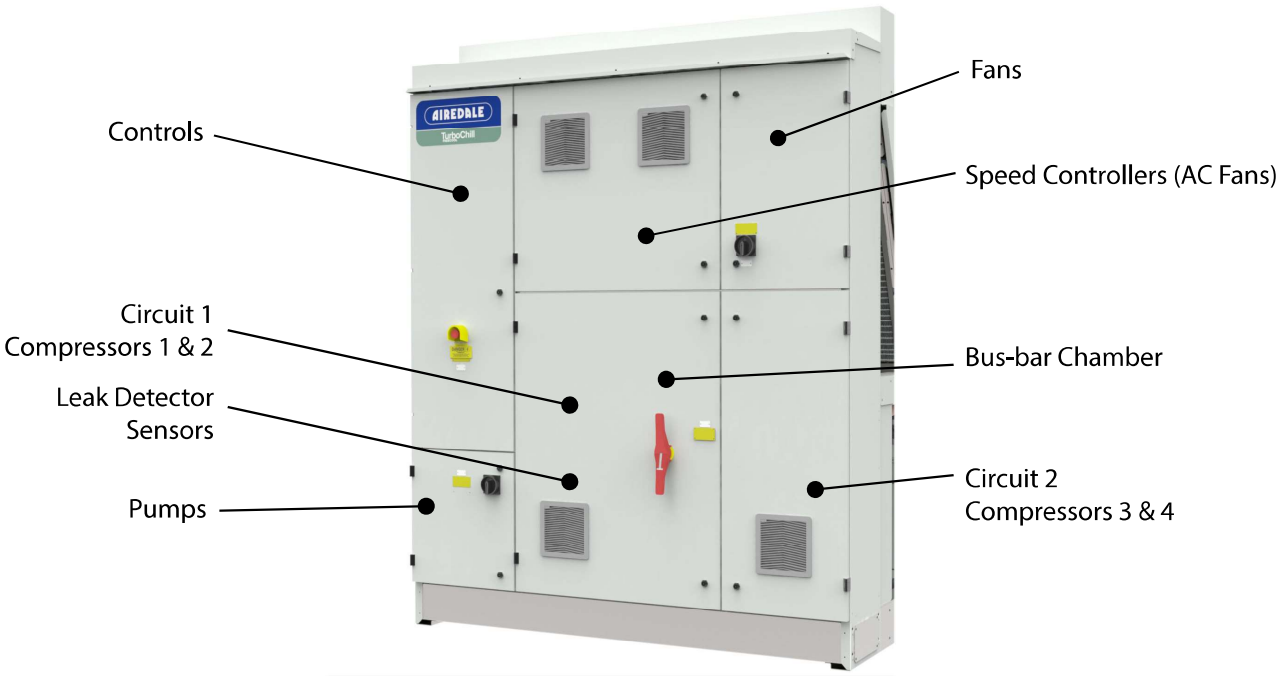

Controls and Electrical	TCC	TCF
Leak detection	●	●
Intelligent head pressure control	●	●
Actuated suction shut off valve	●	●
Power monitoring	●	●
Individual mains power isolator for each compressor	●	●
Separate electrical isolation for fans	●	●
Single point isolation for connection of incoming 3-phase and earth mains power supply	●	●
Emergency Stop fitted to controls compartment door	●	●
Circuit breakers for protection of all major unit components	●	●
Phase rotation relay incorporating phase loss protection	●	●
Single phase supply isolator (panel mounted)	●	●
Mains power loss emergency shutdown via ultracap	●	●
Control panel light	○	○
Maintenance socket	○	○

● Standard features ○ Optional features — Feature not available

3 Phase Single Point Isolaton

Single point isolation shall be fitted as a standard feature.

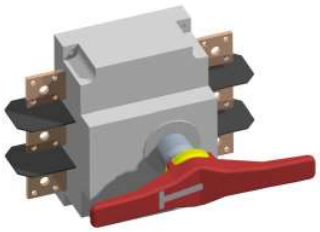

Ultracap Power Backup

The Ultracap module is a standard feature utilising the latest Ultra Capacitor technology in external backup device for the EVD Evolution drivers and pCO controllers. The module guarantees temporary power to the controller and drivers in the event of mains power failures. The Ultra Capacitors are used to maintain the controller's main functions and to close the electronic valves in the event of mains power failures. This avoids the need to install a solenoid valve in the refrigerant circuit or use a battery backup module and allows the system to resume control as soon as mains or backup power returns to the unit.

Energy Manager

Analysis of system energy consumption can be monitored via a dedicated LCD display. Unit parameters can be adjusted via the unit microprocessor control to affect energy usage in line with the system need.

Mains Cable Entry

The unit mains cable can enter from either side of the electrical control panel.

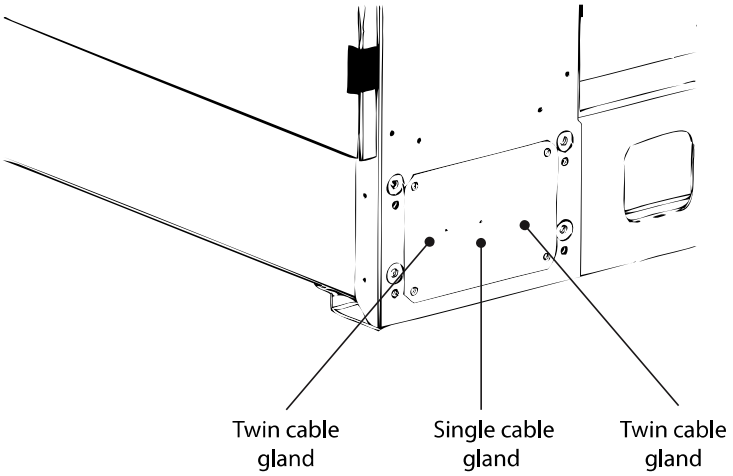

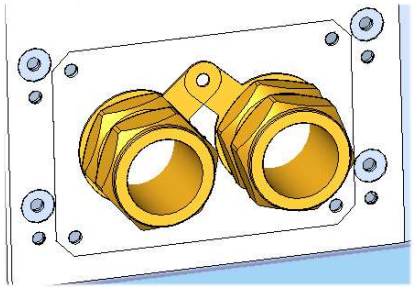

Maximum Cable Gland Sizes

Single 1 x M75S
Twin 2 x M63S

Control Panel Light

A control panel light shall be fitted to enable control panel maintenance to be carried out during poor light conditions.

Maintenance Socket

A single phase maintenance socket (RCD protected) is available located within the control panel. This socket enables UK plugs to be connected.

Condenser Fans

Fans	TCC	TCF
800 mm diameter EC axial fans	●	●
800 mm diameter AC axial fans	○	○
800 mm diameter High airflow EC fans*	○	○

● Standard features ○ Optional features — Feature not available

* High airflow EC fans are not available with the X type units.

Energy saving Electronically Commutated (EC) Fan Motor

Each 800 mm diameter fan incorporates on board electronics with AC / DC conversion and inverter driven DC motor control to offer unparalleled high efficiency levels combined with smooth step-less speed control and quiet operation. Sickle blades reduce air turbulence to minimise sound levels and power consumption whilst maximising performance. The long bell mouth design provides improved aerodynamics, up to 10% more air movement, and an extended vertical throw of air to reduce the chance of air recirculation. As standard the enclosure is complete with an integral finger proof grille. The fans offer maximum airflow performance while keeping sound levels to a minimum. A mains EMC filter is fitted when the standard EC fan option is selected with the unit. The filter is designed for convenient mains connection within the bus bar chamber. The in built EC fan control module allows for fan speed modulation from 15 -100%, an AC fan's modulating range is typically 40-100% of full fan speed. The EC fan presents superior energy efficiency at reduced fan speed compared to the equivalent AC fan motor, offering efficiency savings anywhere between 30 to 100% compared with an AC fan. Fan speeds are factory set depending on sound level variant. Voltage regulated (VR) fan speed controllers offer a linear response. By comparison the standard EC fan is adjusted on demand via the unit microprocessor with precision, offering substantial energy savings. The following illustration shows a comparison of the typical power input required by each method.

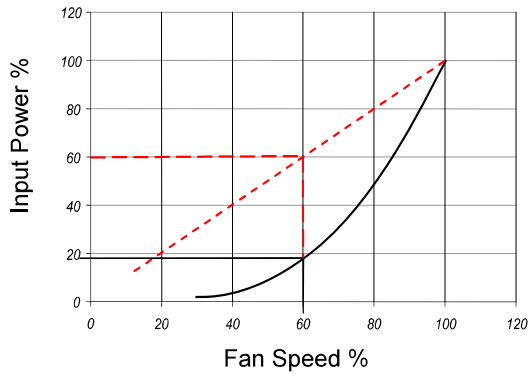

Fan speed of 60%
Voltage regulated input power required 60%
EC input power required 18%

—— EC (Electronically Commutated) Fan Speed Control

---- Voltage Regulated Fan Speed Control

Condenser Fan and Motor - AC

Axial fan assemblies with finger proof grille and incorporating external rotor AC motor technology, capable of highly accurate discrete speed control, discharges air vertically. The fans offer maximum performance whilst keeping sound levels to a minimum.

Waterside

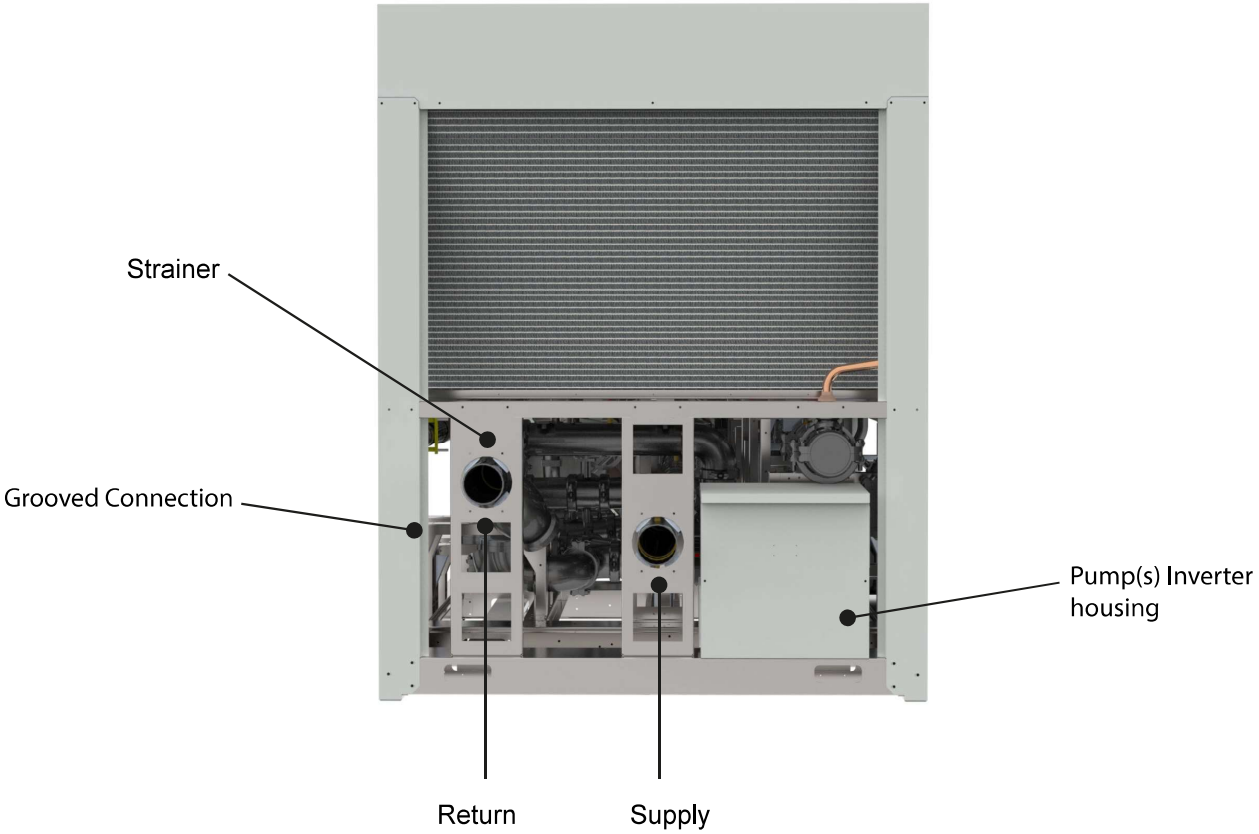

Waterside	TCC	TCF
Free Cooling Coil	—	●
Evaporator Immersion Heaters	●	●
Internal water filter**	○	●
Pump hydronic options**	○	○
Grooved and clamped type connections	●	●
Flanged connections***	○	○
Pump vibration eliminators	●	●
Pump interlock*	○	○
Flow switch*	○	○
Differential pressure transducer*	●	●

● Standard features ○ Optional features — Feature not available

CAUTION ⚠	*Each feature is a flow proving device, and 2 out of the 3 should be fitted to any unit to validate warranty.

**options only available within units with sufficient space.
*** Flanged connnection not available on TCC Evaporator only.

Free Cooling Coil

A free cooling coil constructed in a “V” frame arrangement, allowing for efficient heat transfer from the ambient air temperature to the cooling process. The free cooling coil is manufactured from copper tube and aluminium fin. The TurboChill free cool chiller’s pipe work has been designed to optimise pressure drop, reducing pump input power. It shall be fitted with a water drain valve (schrader point located at lowest point of coils) for maintenance purposes. Free cooling is initiated whenever the outdoor ambient temperature is 2K less than the return water temperature. The “V” frame arrangement enables efficient concurrent cooling.

Water Filter

A 20 mesh water filter can be supplied fitted to protect the evaporator from clogging by sediment. On certain models the filter is fitted externally.

Grooved and Clamp Type Connections

Grooved and clamp type connections shall be fitted to the unit.

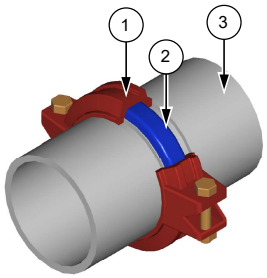

1. Clamp
2. Gasket
3. Counter pipe

Flanged Connections

Flanged connections shall be fitted to the unit upon request. (excluding TCC evaporator only hydronic options). Please contact Airedale.

Pump Vibration Eliminator

Flexible couplings shall be fitted to the pumps (>11kW) to reduce any vibration through the system pipework.

Pump Interlock*

Provision for a pump interlock is available within the control panel.

Water Flow Switch*

If selected. A water flow switch is fitted ensuring integrity of the cooling solution flow. The flow switch shall protect the Chiller against low water flow conditions. Despatched loose for on site fitment.

Flow Proving Device

An evaporator differential pressure sensor facilitates low flow limiting and pressure drop monitoring via the microprocessor shall be fitted. This is to ensure correct unit water flow at all times during unit operation. If the water flow is reduced a critical alarm is generated.

CAUTION ⚠	*Each feature is a flow proving device and 2 out of the 3 should be fitted to any unit to validate warranty.

Pump Options

A variety of pump options to suit a wide range of applications are available:

Factory fitted in line as a single pump or run / standby configuration with multiple pump sizes to tailor exact customer requirements in terms of flow and additional head. Factory fitted run/standby pumps have a shut off valve to the inlet and a non return valve to the outlet, enabling one pump to be maintained without interrupting Chiller flow. Supplied with electrical switch gear and isolating valve as standard. Run/standby pumps are rotated automatically to ensure even pump usage and prolong component life.

Pump - AC Motor - Fixed Speed

Flow can be proven via the microprocessor display.

Factory fitted and supplied as standard complete with:

- Differential pressure sensor.
- Isolating valves.
- Inlet strainer.
- Vibration isolation.
- Electrical switch gear.

Pump - Inverter Driven - Variable Speed

Flow is varied via an electronic flow meter, depending on system requirements.

Adjustment and monitoring is via the microprocessor display.

Factory fitted and supplied as standard complete with:

- Differential pressure sensor.
- Isolating valves.
- Inlet strainer.
- Vibration isolation.
- Electrical switch gear.
- Inverter panel with ventilation fan and panel heater (high/low ambient operation).

Water Connections
Water inlet and outlet connections shall be of a grooved and clamped type construction. Optional flanged connections shall be available on request (excluding TCC evaporator only), please consult Airedale.

Water connection to evaporator only (air cooled only)
Water inlet and outlet connections shall terminate directly on the evaporator.

Extended Water Connections (air cooled only)
Extended water connections shall be available on all air cooled units, it allows the water connections to terminate at the end of the unit.

Bypass Options

No Bypass
Comprises
- Shut off valves.
- Filter.

Flushing bypass kit (standard)
Comprises:
- Shut off valves.
- Filter.
- Bypass leg with shut off valve.

Flushing bypass kit (regulating)
Comprises:
- Shut off valves.
- Filter.
- Bypass leg with Double regulating valve.

Pump Configurations

Single pump + filter + bypass (flushing)
Comprises:
- Single pump with vibration isolation.
- Shut off valves.
- Filter.
- Bypass leg.

Single pump + filter + bypass (regulating)
Comprises:
- Single pump with vibration isolation.
- Shut off valves.
- Filter.
- Double regulating valve.

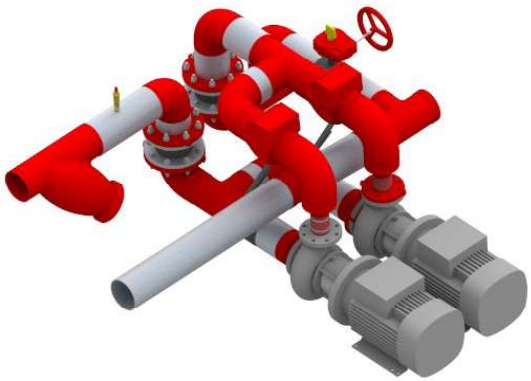

Run and standby pump set.

Run & standby pumps + filter + bypass (flushing)
Comprises:
- Run and standby pumps with vibration isolation.
- Shut off valves.
- Filter.
- Non return valve.

Run & standby pumps + filter + bypass (regulating)
Comprises:
- Run and standby pumps with vibration isolation.
- Shut off valves.
- Filter.
- Double regulating valve.
- Non return valves.

Controls

The microprocessor controller shall offer powerful analogue and digital control to meet a wide range of monitoring and control features including a real time clock and Industry standard communication port and network connections. The controller's inbuilt display shall be used for viewing the unit operating status and making adjustments to control parameters by allowing the operator access to a series of display pages. Also featured shall be a visual alarm and the facility to adjust and display control settings by local operator for information and control.

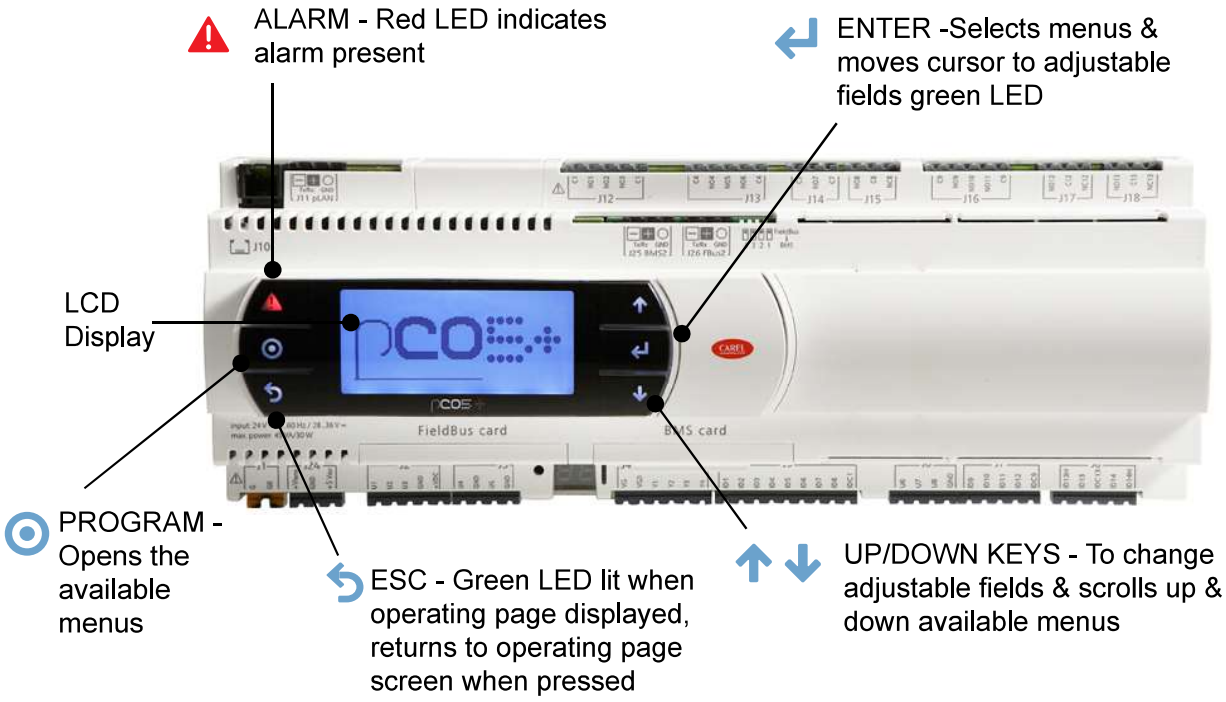

Temperature Control

The microprocessor controller shall monitor the return and supply temperatures. The supply temperature is used to calculate the required cooling demand. Further calculations are then made to determine the optimum compressors to be selected and their individual cooling demands. These calculations ensure the unit efficiency is maximised under all load conditions. As standard, the microprocessor controller can provide an infinite capacity control between between minimum unloading capacity and 100% depending upon component selection and operating conditions. Refer to mechanical data tables for unit specific control ranges.

Monitoring

The microprocessor shall also monitor and display the following measured parameters:

- Supply water temperature.
- Return water temperature.
- Liquid pressure.
- Suction pressure.
- Evaporator differential water pressure.

Alarm Handling

The controller shall log and allow viewing of the last 150 conditions recorded in descending chronological order through the keypad display.

The following conditions shall be detected, triggering a visual display:

- High compressor discharge temperature (per compressor).
- Low supply temperature.
- Phase rotation.
- Emergency stop.
- Evaporator flow failure.
- Low pressure safety switch.
- Low suction pressure (per compressor).
- High liquid pressure.
- Refrigerant leak detected.
- Compressor 1 contactor status.
- Compressor 2 contactor status (dependant on model).
- Compressor 3 contactor status (dependant on model).
- Compressor 4 contactor status (dependant on model).
- Volt free contact non-critical alarm indication.
- Volt free contact critical alarm indication.

Building Management Systems (BMS)

Sequencing (Master/Slave and Run/Standby) via the Airedale sequence manager. Please specify at time of enquiry.

Chiller Sequence Manager

For the efficient temperature and capacity operation of multiple units on a single site, the sequence manager will permit interlinked operation of the complete system thereby providing optimum temperature control and minimum power consumption. Up to 6 units can be sequenced. Included within this package is a site visit by an Airedale Control Specialist to set up multiple unit sequence control. The chiller sequence manager is supplied as a separate control panel to be mounted remotely in an indoor location, such as a plant room.

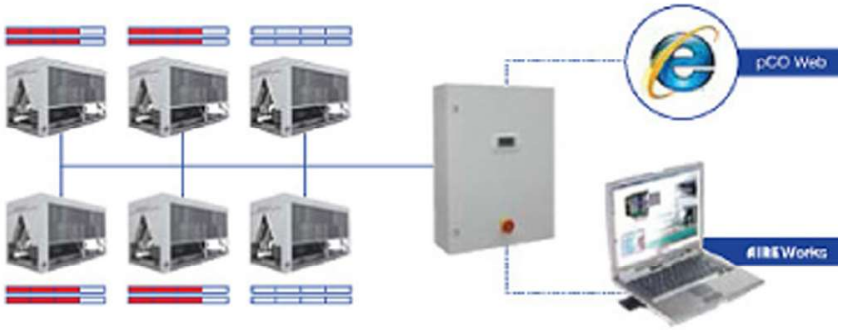

Unit Remote ON/OFF
Disables/Enables the unit remotely.

Compressor Anti Cycle Control
Automatic via the Microprocessor.

Compressor Load Limit
This feature limits the condensing pressure to 12.4 Barg by unloading the compressor.

Suction Pressure Limiting
Limits the evaporating pressure by unloading at the minimum pressure set-point, which is, adjustable depending on system glycol content.

Supply Temperature Limiting
Based upon the freezing point of the water/ glycol solution, the unit operation is limited to a 2K differential. Cooling is reduced as the temperature approaches the freezing point (below this differential). The differential is the difference between actual temperature and the freezing point of the solution.

Pump(s) Remote ON/OFF
Disables/Enables the pump(s) remotely.

Evaporator Differential Pressure Sensor
Shall facilitate low flow limiting and pressure drop monitoring via the microprocessor.

Remote Setback Temperature Set-point Switch
A setback set-point for supply water temperature shall be selected to suit summer / winter conditions or night setback.

Remote Set-point Adjust
Shall allow the chilled water set-point to be adjusted via an external 0-10V signal.

Compressor Hours Run
Displays hours run of each compressor.

Interactive Head Pressure Setpoint Management
The combination of variable speed compressor, EC fan and interactive control logic allows fans to be slowed down to give the optimum head pressure setpoint in relation to combined power draw of compressor and fans. The fan speed shall automatically modulate to achieve the best energy balance for all normal operating conditions. Reducing the head pressure setpoint decreases the compressor input power at the expense of the fan input power.

Compressor Reduced Start Delay
Compressor fast start functionality shall be available for applications that require minimum downtime following 3 phase power failure. This is subject to a compressor UPS being fitted onto the L4 permanent supply. Please contact Airedale.

CAUTION ⚠	**Password Protection** The control system integrity shall be maintained by restricting access with a password PIN number.

IMPORTANT ⚠	To change the PIN number; please contact Airedale at time of order with the preferred 4 digit number.

BMS Interface Card

BMS system configuration by others. Enables units to be interfaced with most BMS, factory fitted, please contact Airedale. A wide range of protocols shall be accommodated through the use of interface devices. Available as a standard option are: ModBus/Jbus, Carel, SNMP, LonWorks, Metasys and BACnet. Also available shall be Airedale's own supervisory plug-in BMS card pCOWEB. Based on Ethernet TCP/IP secure technology with SNMP features. Requires no proprietary cabling or monitoring software and supplied pre-programmed with an IP address for ease of setup.

Modbus/Carel BMS Connection

The Airedale controllers shall be able to communicate directly using the Modbus® protocol.
The Modbus® card shall be a small PCB (60mm x 30mm), which is plugged into the controller to provide it with the following protocol support:

- Modbus® - JBus slave.
- RTU mode (Remote Terminal Unit) with 8 bit encoding and error handling using 16 bit CRC.
- Communication standard connection options of RS485 (multipoint) or RS232 (point-point).
- Maximum Baud Rate of 19200.

The data communication shall be asynchronous serial, 8 data bits, 2 stop bits and no parity (in total 11 bits/datum). The data/parameters from the controller shall be represented within Modbus® registers, each register containing information pertaining to temperatures, pressures, setpoint and status etc. shall be available to the site integration company in a spreadsheet format.

Lon BMS Connection

The Airedale controllers, using special serial cards, shall be integrated into LonWorks® networks. The RS485 and the FTT10 standards shall be supported by the LonWorks® serial cards.
The two types of LonWorks® serial cards shall differ by the type of interface on the LonWorks® network side:-

- FTT-10A 78 kbs (TP/FT-10).
- RS485 39 kbs (TP/485-39).

pCOWeb

pCOWeb is a new generation of Airedale supervisory plug-in cards which make communicating with an Airedale unit simply a matter of logging onto the office Intranet or via the web. Based on Ethernet TCP/IP secure technology, pCOWeb shall require no proprietary cabling. It shall have little or no setup on site and can be pre-programmed with an IP address prior to dispatch from airedale.

CAUTION ⚠	When adding to an existing controls scheme, please consult Airedale Controls to ensure strategy compatibility.

Mechanical

Mechanical	TCC	TCF
Lifting lugs	●	●
Base - plain galvanised steel	●	●
Panels - galvanised sheet steel with epoxy powder paint	●	●
No Discharge plenum	●	●
300mm height fan discharge plenum	●	●
500mm Extended height fan discharge plenum	○	○
Anti-vibration mounts (spring or pad type)	○	○
Weatherproof rain hood	○	○
Compressor enclosures(s)	○	○

● Standard features ○ Optional features — Feature not available

Lifting Lugs

Lifting Lugs shall be fitted to the unit enabling full lifting requirements. The lifting lug hole diameter is 40 mm.

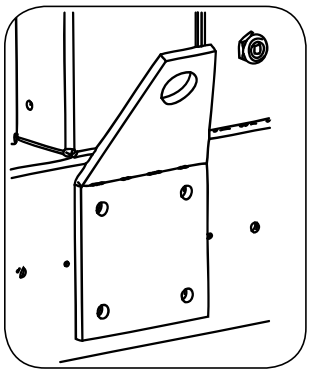

Anti Vibration Mounts (Spring Type)

Specially selected spring vibration isolators shall be supplied loose for on site fitting to the base frame of each unit.
The isolators shall be suitable for fitting to structural steelwork providing the surface is level and of sufficient strength where a high level of vibration elimination is required.

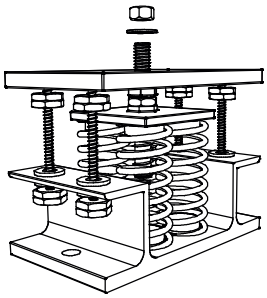

Anti Vibration Mounts (Pad Type)

Pad vibration isolators can be supplied loose for on site fitting to the base frame of each unit.
The isolators are suitable for fitting to structural steelwork providing the surface is level and of sufficient strength where a moderate degree of vibration elimination is required.

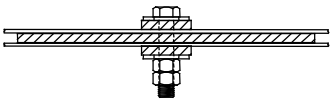

No Discharge Plenum

No discharge plenum is fitted as standard.

Discharge Air Plenum - Condenser Fan

Factory fitted and constructed from galvanised sheet steel coated with epoxy baked powder paint, this plenum shall direct discharge air vertically which reduces air re-circulation and provides a degree of acoustic reduction in the horizontal plane. Standard unit colour shall be Light Grey (RAL 7035). The overall unit height when fitted with the optional 300mm discharge air plenum is 2800mm.

Extended Discharge Air Plenum - Condenser Fan

Site fitted and constructed from galvanised sheet steel coated with epoxy baked powder paint, this plenum shall direct discharge air vertically as an aid to minimise air re-circulation and also offers a degree of acoustic reduction in the horizontal plane. Standard unit colour shall be Light Grey (RAL 7035). The overall unit height when fitted with the extended 500mm discharge air plenum is 3300mm.

Weatherproof Rain Hood

A rain hood shall be fitted to the TurboChill chiller which will allow the customer, (maintenance / commissioning personnel), to work on the control panel whatever the weather with a reduced risk of sensitive electrical components getting wet. The electrical panels are fully weatherproof when closed.

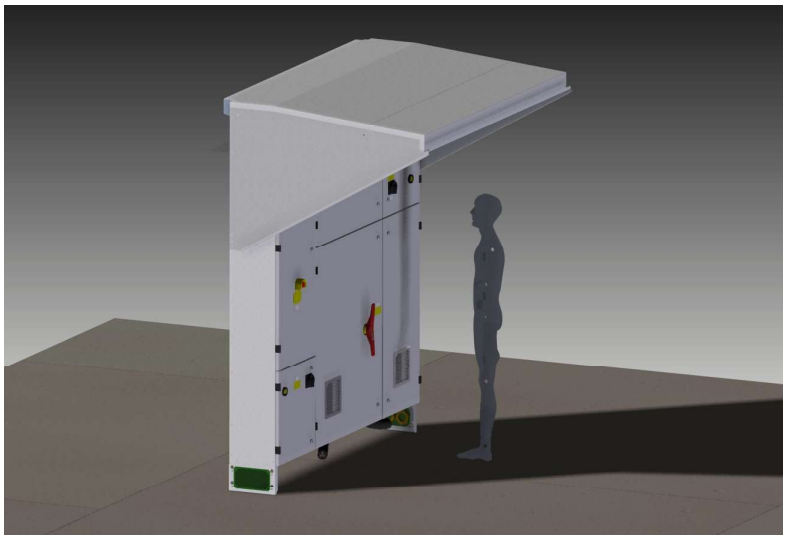

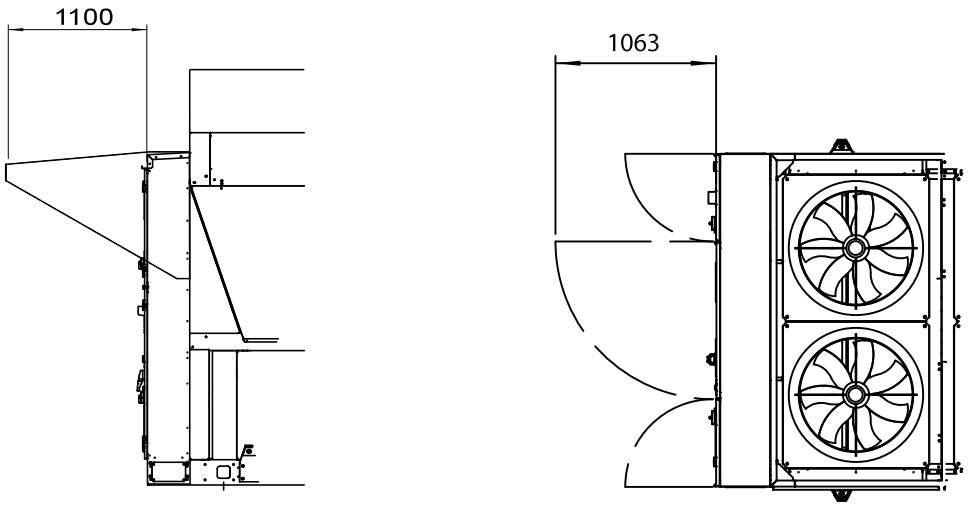

Compressor Enclosure

Optional compressor enclosure offers improved resistance to dust over the standard compressor's IP54 housing. The weatherproof compressor enclosure is recommended for installations with particularly adverse dusty environments.

Design Features & Information

Specific Heat Capacity (SHC)

% Ethylene Glycol Concentration		0%	10%	20%	30%	40%
Specific Heat Capacity (kJ/kgK)	(1)	4.190	4.115	3.901	3.686	3.474

% Propylene Glycol Concentration		0%	10%	20%	30%	40%
Specific Heat Capacity (kJ/kgK)	(1)	4.190	4.139	4.033	3.903	3.749

(1) Data quoted for water/glycol solutions at a nominal temperature of 10°C.

CAUTION ⚠	Only use the SHC data when calculating fluid volume. Use figure for 0% concentration (100% water). When calculating volumes of glycol solutions, refer to glycol data correction factors and convert the water volume.

Minimum System Water Volume Calculations

METHOD 1 (Preferred Method)

Where the system permanent heat load is known, the minimum water volume in litres V_{min} is:

V_{min} = q x t x CLF

q = water flow rate (litre/min) = $\frac{kW \times 60}{\text{Specific heat capacity} \times \Delta t} = \frac{750 \times 60}{4.19 \times 5}$

t = Minimum compressor run time (minutes) = 2

CLF = Chiller loading factor = $\frac{kW \times \text{Minimum Turndown}}{\text{Permanent Heat Load}} \times 1.2 = \frac{750 \times 0.15 \times 1.2}{300}$

Minimum Turndown = Based on data from the mechanical data table. For this example 15% (0.15).

Example:

750kW output at 35°C Ambient and 7/12°C Water
Permanent Heat Load = 300kW
Minimum Turndown = 15% (0.15)
Factor = 1.2

$$= V_{min} = \frac{750 \times 60}{4.19 \times 5} \times 2 \times \frac{(750 \times 0.15)}{300} \times 1.2 = 1933 \text{ Litres}$$

METHOD 2

Where the system permanent heat load is unknown:

$V_{min} = \frac{q \times MTR \times 1.2}{MNS}$

where:

q = water flow rate (litre/hour) = $\frac{kW \times 3600}{\text{Specific heat Capacity} \times \Delta t} = \frac{750 \times 3600}{4.19 \times 5}$

Minimum Turndown = Based on data from the mechanical data table. For this example 15% (0.15).

Factor = 1.2

MNS = Maximum number of starts / hour = 12

Example:

750kW output at 35°C Ambient and 7/12°C Water
Minimum Turndown = 15% (0.15)
Factor = 1.2
Maximum number of starts per hour = 12

$$V_{min} = \frac{\frac{750 \times 3600}{4.19 \times 5} \times 0.15 \times 1.2}{12} = 1933 \text{ Litres}$$

Design Features & Information

Operating Limits

Standard Unit

Minimum ambient air DB	-20°C*
Maximum ambient air DB at full load operation	35°C
Max ambient air DB (subject to chiller model selected)	40°C
Minimum supply water temperature	5°C
Maximum return water temperature	26°C**
Maximum supply water temperature	18°C
Minimum / maximum ΔT	4K / 8K

* Appropriate Glycol may be required, refer to the freeze protection policy.
** With an 8K ΔT

ESEER Calculations

The quoted EER figures cover the performance of the unit ONLY at the standard rating conditions of 7/12°C water, 35°C ambient. The ESEER (European Seasonal Energy Efficiency Ratio) calculation method has been developed by Eurovent to give a single value that is a realistic indication of the efficiency of the chiller across the year round range of operation. The ESEER value is calculated from the unit's performance at 20, 25, 30 and 35°C ambient temperatures for 25, 50, 75 and 100% loading stages respectively, and with a fixed 7°C supply temperature.
The calculation below uses the Eurovent weighting coefficients and the part load EERs are determined in accordance with EN14825:2018 Clause 4.4.

$$ESEER = A \bullet EER_{100\%} + B \bullet EER_{75} + C \bullet EER_{50\%} + D \bullet EER_{25\%}$$

A, B, C and D are weighting factors 0.03, 0.33, 0.41 and 0.23.

	A	B	C	D
Temperature	35°C	30°C	25°C	20°C
Capacity Requirement	100%	73.7%	47.4%	21.1%
Weighting (Eurovent)	0.03	0.33	0.41	0.23

Design Features & Information

Performance Effects of Glycol

Glycol Data

For a given percentage of glycol in the system there are correction factors that need to be applied, the following tables can be used as a guide. For accurate glycol selections please contact Airedale.

CAUTION

The source data must be 100% water for the correction factors to be valid.

Ethylene Glycol Nominal Correction Factors

Glycol in System / Freezing Point °C		10% / -4°C	20% / -7.8°C	30% / -14.1°C	40% / -22.3°C
Output (kW)	x	0.98	0.97	0.95	0.93
Compressor Input (kW)		0.99	0.98	0.96	0.95
Water Flow (l/s)		0.99	1.02	1.04	1.07
Pressure Drop (kPa)		1.05	1.20	1.38	1.57

Propylene Glycol Nominal Correction Factors

Glycol in System / Freezing Point °C		10% / -2°C	20% / -7.1°C	30% / -12.7°C	40% / -21.1°C
Output (kW)	x	0.97	0.95	0.91	0.88
Compressor Input (kW)		0.99	0.98	0.96	0.95
Water Flow (l/s)		0.98	0.97	0.95	0.95
Pressure Drop (kPa)		1.08	1.17	1.31	1.45

Example: At 100% Water:

Output	=750 kW
Compressor Input	=228.6 kW
Flow Rate	=35.83 l/s
Pressure Drop	=20.6 kPa
Ambient	=35°C
Inlet Fluid Temp.	=7°C
Outlet Fluid Temp.	=12°C (5K ΔT)

To 20% Ethylene Glycol:

	100% Water	Multiplier	20% Ethylene Glycol
Output (kW)	750	x 0.97	727.5 kW
Compressor Input (kW)	228.6	x 0.98	224.0 kW
Water Flow (l/s)	35.83	x 1.02	36.55 l/s
Pressure Drop (kPa)	20.6	x 1.20	24.72 kPa

Design Features & Information

Measurement of Sound Data

All sound data quoted has been measured in the third-octave band limited values, using a Real Time Analyser calibrated sound intensity meter in accordance with BS EN ISO9614 Part 1:2009. The Global sound data quoted is valid for noise emitted in the horizontal plane in all directions. All Sound Power Levels quoted are calculated from measured sound intensity according to BS EN ISO9614 Part 1: 2009. Sound Pressure Levels are calculated from sound power using the expanded parallelepiped method according to BS EN ISO 11203: 2009.

Acoustic data is representative of the unit running at the nominal duty and conditions, under steady state operation

Sound Directivity

The global sound measurements quoted in the following tables do not incorporate any directivity or denote any sound level heard at any given position surrounding the unit, rather they represent the total sound level radiating from the unit in all directions in the horizontal plane from source. Using the adjustment factors from the map below, partial sound power levels can be derived from the global sound power data.

Base Correction Values - Global dB

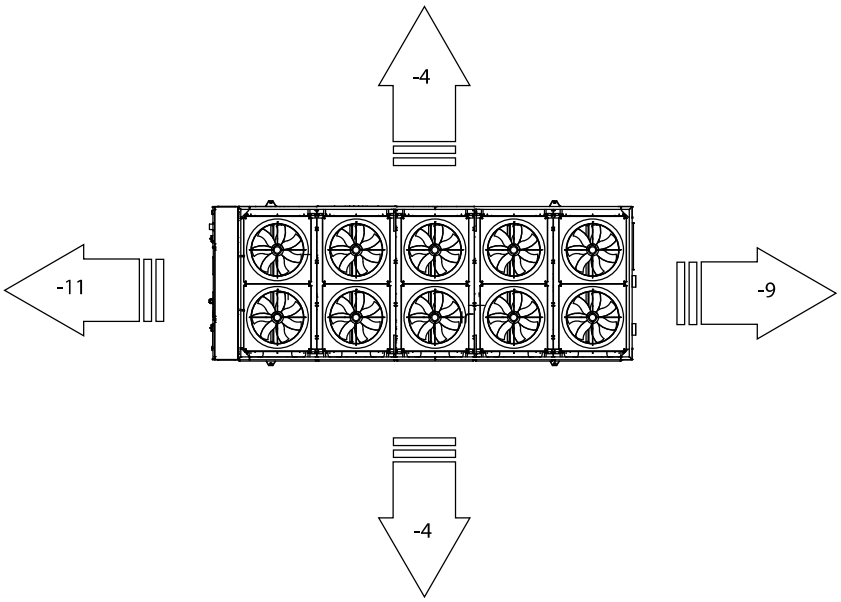

EXAMPLE (dB(A)): 470 kW Output - Quiet Models - TCC12R08G-04 Overall Sound Power of 89 dB(A) =

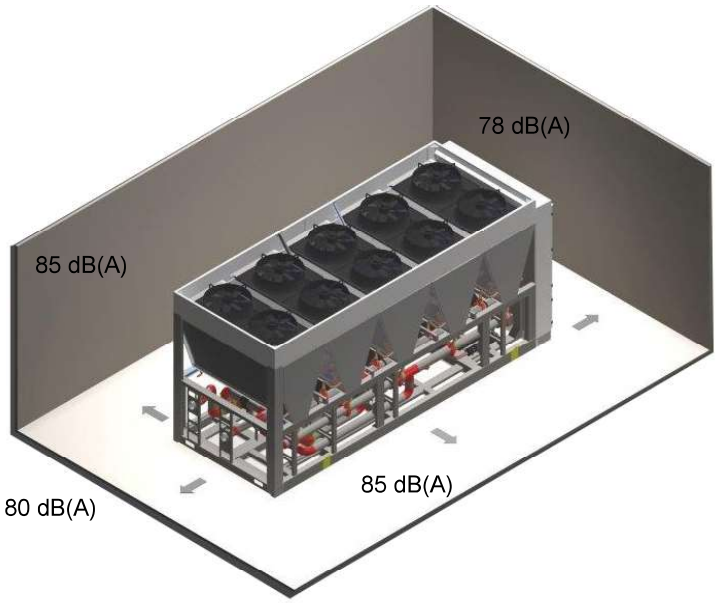

Design Features & Information

Pressure Relief Valve Discharge Piping

Considerations must be made when designing pipework for PRV venting. This must be designed in accordance to EN378-3 Section 5.8 Piping and ducting.

- Caution must be taken to ensure excessive pressure drop in the pipework is avoided.
- All piping and ventilation ducting which passes through walls, ceilings and floors of machinery rooms, shall be sealed where it passes through the walls or floors. The sealing shall have fire resisting properties at least equivalent to the wall, ceiling or floor.
- Discharge pipes from relief valves, safety valves and fusible plugs may diffuse the charge into the air by adequate means but away from any air intake to the building or discharge into an adequate quantity of a suitable absorbing material.
- Relief devices for refrigerant in group A1 (R134a refrigerant) may discharge into the machinery room provided the system charge is less that the limit set in Annex C of prEN378-1:2016. Such discharges of refrigerant should take place so that persons and property are not endangered.
- Compression fittings must not be used for the discharge piping.

Water System

Chilled water pipe work and ancillary components must be installed in accordance with:

- National and local water supply company standards.
- The manufacturer's instructions are followed when fitting ancillary components.
- The system liquid is treated to prevent corrosion and algae forming.
- The schematic is referred to as a guide to ancillary recommendations.

CAUTION ⚠	The unit water connections are NOT designed to support external pipe work, pipe work MUST be supported separately.

Standard Recommended Installation

General

The following diagram illustrates the minimum component installation requirements. A wide range of optional extras are available to suit various applications.

CAUTION ⚠	The following installation recommendations should be adhered to. Failure to do this may invalidate the chiller warranty.

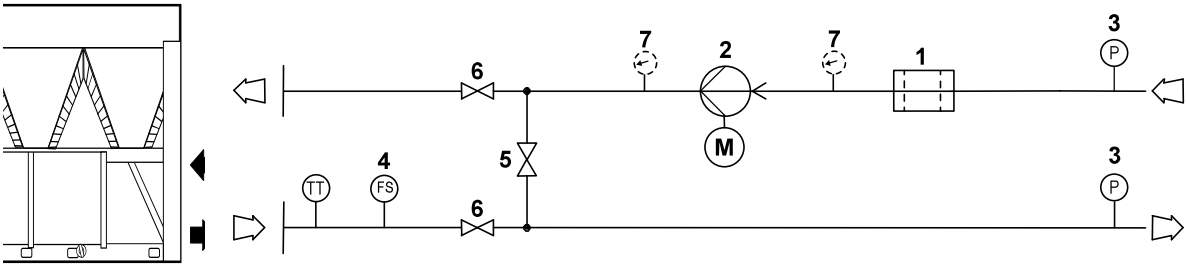

The water flow commissioning valve set is not shown in the diagram, as the valve can be fitted elsewhere within the chilled water circuit.

1 Filter 20 mesh.
2 Pump.
3 Pressure sensor.
4 Flow switch.
5 Flushing bypass leg.
6 Shut off valve.
7 Pressure gauge.

CAUTION ⚠	Full design water flow must be maintained at all times. Variable water flow is not recommended and will invalidate warranty. The correct operation of the flow proving device is critical if the chiller warranty is to be valid.

Design Features & Information

Water Systems and Recommended Flow Schemes

The recommended requirements to allow commissioning to be carried out correctly are:

- The inclusion of binder points adjacent to the flow and return connections, to allow temperature and pressure readings.
- A flow switch or equivalent, fitted adjacent to the water outlet side of the chiller.
- A 20 mesh strainer fitted prior to the evaporator inlet.
- A water-flow commissioning valve set fitted to the system.
- In multiple chiller installations, 1 commissioning valve set is required per chiller.
- Air vents are to be installed at all high points and where air is likely to be trapped at intermediate points.
- Drain points are to be installed at all low points in the system and in particular adjacent to the unit for maintenance to be carried out. The unit must be drained for winter shutdown.
- Isolating valves should be installed adjacent to all major items of equipment for ease of maintenance.
- Balancing valves can be installed if required to aid correct system balancing.
- All chilled water pipe work must be insulated and vapour sealed to avoid condensation.
- If several units are installed in parallel adjacent to each other, reverse return should be applied to avoid unnecessary balancing valves.

Pump Statement

When installing circulating water pumps or equipment containing them, the following rules should be applied:

- Ensure the system is filled with water then vented and the pump primed with water before running the pump, this is required because the pumped liquid cools the pump bearings and mechanical seal faces.
- To avoid cavitation the NPSH (Net Positive Suction Head) incorporating a safety margin of 0.5m head must be available at the pump inlet during operation.

Interlocks & Protection

Always electrically interlock the operation of the chiller with the pump controls **and** water flow switch.

CAUTION ⚠	Failure to install both safety devices will invalidate the chiller warranty. Do not rely solely on the BMS to protect the chiller against low flow conditions.

These safety devices prevent the chiller operating with low water flow which can cause serious damage.
An evaporator pump interlock and flow switch MUST be directly wired to the chiller, refer to interconnecting wiring.

Flow schemes

Basic Supplied Water Schematic - Evaporator only
(Includes flow proving device)

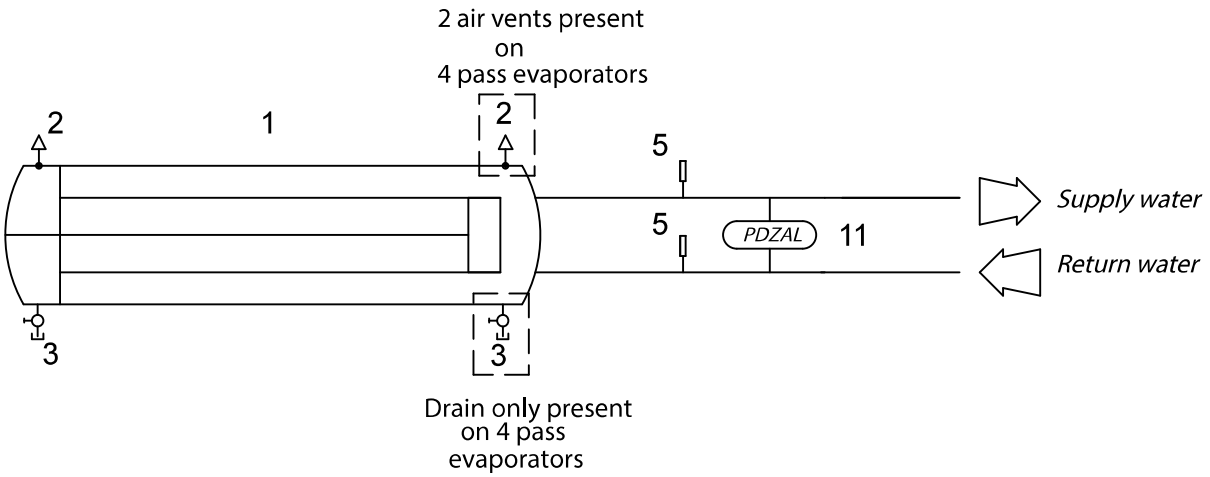

Key
(some items not used)

1 Evaporator.
2 Automatic air vent.
3 Drain.
4 Butterfly shut off valve.
5 Binder point.
6 Filter.
7 Flanged terminations (option).
8 Pump.
9 AV mounts.
10 Non return valve.
11 Differential pressure transducer.
12 Flow switch.
13 Double regulating valve.
14 temperature sensor.
15 Mixing valve.
16 Free cooling coil.

Design Features & Information

Standard Air Cooled Circuit

Incorporating

- 20 mesh water filter.
- Differential pressure transducer.
- Shut off valves.

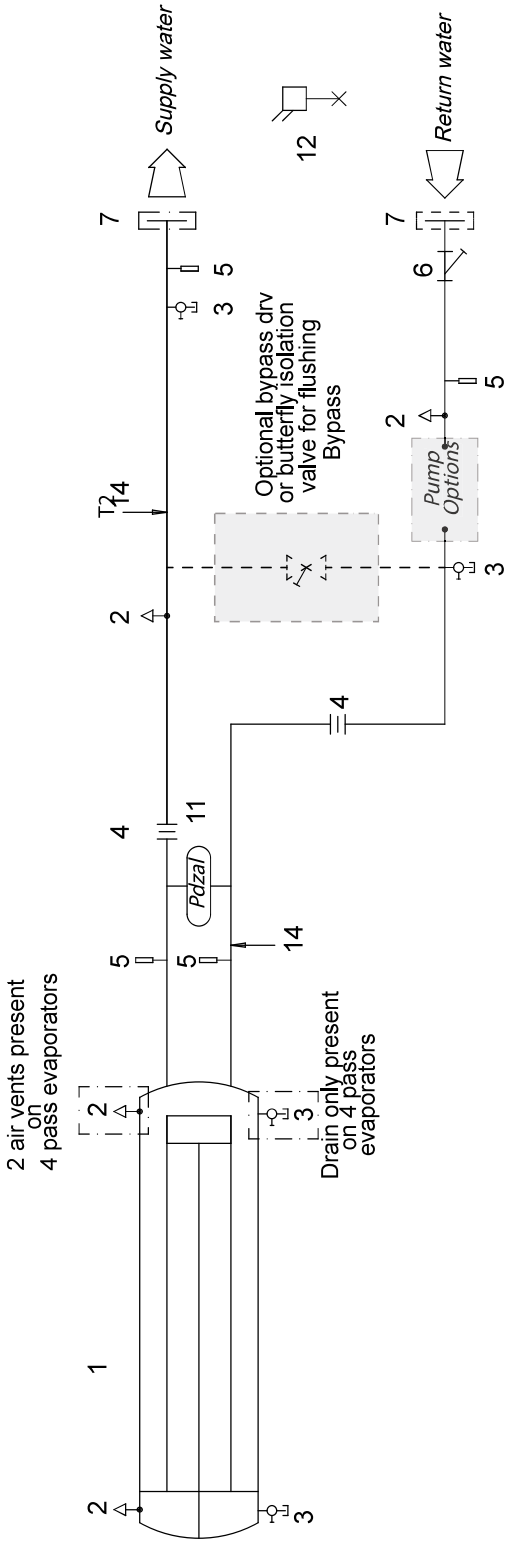

Pump Options

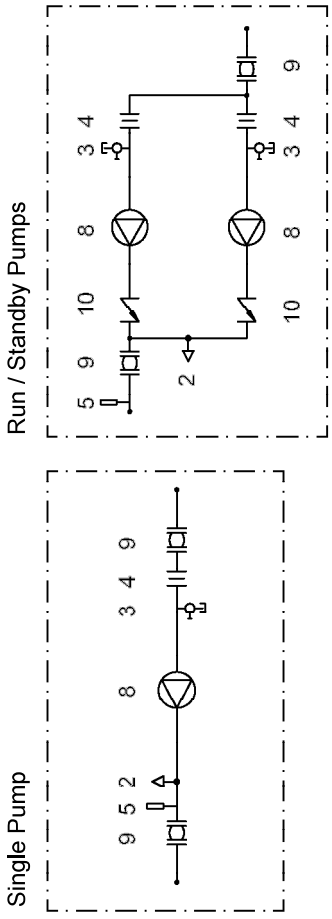

Key

1 Evaporator.
2 Automatic air vent.
3 Drain.
4 Butterfly shut off valve.
5 Binder point.
6 Filter.
7 Flanged terminations (option).
8 Pump.
9 AV mounts.
10 Non return valve.
11 Differential pressure transducer.
12 Flow switch.
13 Double regulating valve.
14 temperature sensor.
15 Mixing valve.
16 Free cooling coil.

Design Features & Information

Standard Free Cooling Circuit

Incorporating

- 20 mesh water filter.
- Differential pressure transducer.
- Shut off valves.

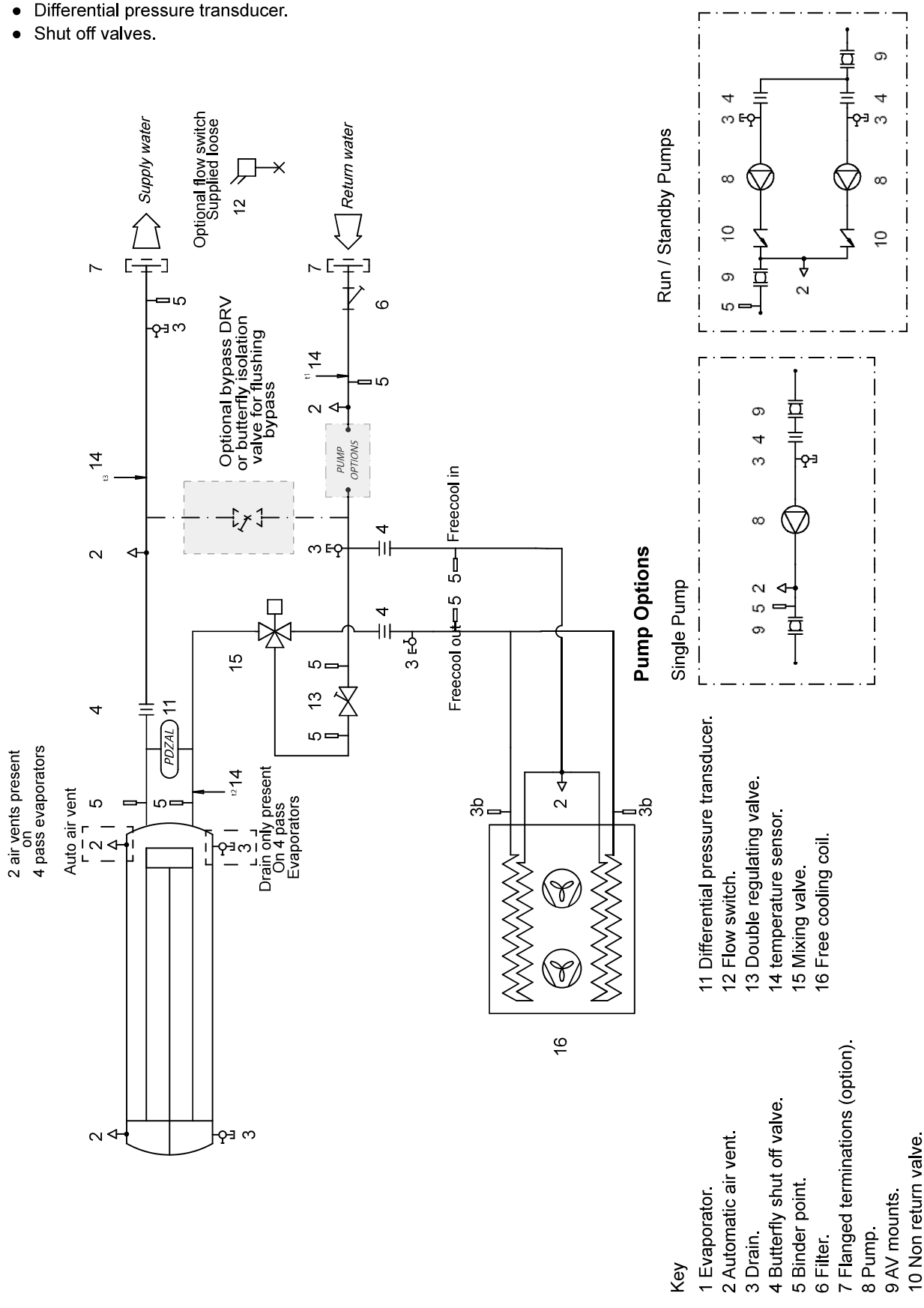

Key

1 Evaporator.
2 Automatic air vent.
3 Drain.
4 Butterfly shut off valve.
5 Binder point.
6 Filter.
7 Flanged terminations (option).
8 Pump.
9 AV mounts.
10 Non return valve.
11 Differential pressure transducer.
12 Flow switch.
13 Double regulating valve.
14 temperature sensor.
15 Mixing valve.
16 Free cooling coil.

Technical Data TCC

Mechanical and Elecrical Data

Mechanical Data	Notes	Units	TCC11R03Z-64	TCC11R04G-53	TCC11R06G-53	TCC11R08G-53	TCC12R08G-55
Cooling Duty (Gross) - EC Fans	(1)	kW	190	230	250	260	445
Nom Input -Cooling Only		kW	60.6	70.5	70.7	70.2	140.4
EER	(2)		3.14	3.26	3.53	3.70	3.17
ESEER	(3)		4.58	4.55	5.14	5.44	4.82
Minimum Turndown (Capacity/% Max)	(6)	kW/%	66.4/33.2	91/31.4	87.9/30.3	86.2/29.7	86.2/14.9
Dimensions (H 2800 x W 2200)							
Length		mm	3746	2626	3758	4890	4890
Machine Weight	(7)	kg	1580	2745	3300	3785	4730
Operating Weight	(7)	kg	1674	2845	3400	3885	4870
Evaporator							
Total Max. Water Flow		l/s	16.5	23.0	23.0	23.0	41.8
Total Min. Water Flow		l/s	5.5	7.7	7.7	7.7	13.9
Condenser							
Face Area Total		m²	7.1	9.47	14.2	18.9	18.9
Maximum Airflow - EC Fans		m³/s	11.1	14.8	22.2	29.6	29.6
Condenser Fan EC							
Diameter		mm	800	800	800	800	800
Maximum Speed - EC Fans		rpm	1025	1025	1025	1025	1025
Compressor - Type							
Quantity			1	1	1	1	2
Refrigeration					Single Circuit		
Charge (Total) CCT1 + CCT2		kg	75	85	90	100	195
GWP Tonnes Equivalent CO_2		tCO_2e	0.5	0.6	0.6	0.7	1.4
Water System							
Water Inlet / Outlet			DN100	DN100	DN100	DN100	DN125
Water Drain / Bleed - Evap		inch	1/2	1/2	1/2	1/2	1/2
Water Volume		l	40	101.9	101.9	102	141
Minimum System Water Volume	(8)	l	904	1034	1085	1106	950
Max System Operating Pressure		Barg	10	10	10	10	10
Flow Rate		l/s	7.5	9.1	9.9	10.3	17.7
Pressure Drop		kPa	33.4	23.7	27.6	29.6	24.7

Electrical Data							
Full Load Amps	(9)	A	118	166	173	181	331
Maximum Start Amps		A	2	2	2	2	181
Recommended Mains Fuse Size		A	160	250	250	250	355
Evaporator							
Immersion Heater Rating		W	(2x170)	(2x250)	(2x250)	(2x250)	(2x250)
Condenser Fan - Per Fan (EC)							
Full Load Amps		A	3.9	3.9	3.9	3.9	3.9
Motor Rating		kW	2.56	2.56	2.56	2.56	2.56
Compressor - Per Compressor							
Nominal Run Amps		A	106	150	150	150	150
Motor Rating		kW	60	92	92	92	92

(1) Based on AC units performance at 13/7°C return/supply temperatures, 35°C ambient, 100% water.All performance data is supplied in accordance with BS EN 14511-1:2018
(2) EER = DX cooling output / (compressor input power + fan input power).
(3) ESEER based upon unit operating at 12/7 °C return / supply temperature, 35°C ambient.
(4) Nominal Free Cooling output at 16/10°C return/supply temperatures, 2°C ambient, 20% ethylene glycol.
(5) Ambient temperature that nominal DX duty can be achieved using Free Cooling only.
(6) This is a nominal figure based on full compressor duty, actual turndown depends on both condensing and evaporating temperatures.
(7) Based on standard unit without options, machine weight includes refrigerant charge, operating weight includes refrigerant charge and water volume. For unit weights with waterside options fitted please contact Airedale.
(8) For minimum system water volume calculation, refer to Design Features & Information - Minimum System Water Volume Calculations.
(9) Height based on standard fan, for optional fan dimensions please contact Airedale.

Technical Data

Mechanical and Electrical Data

Mechanical Data	Notes	Units	TCC12R10G-55	TCC22R08G-58	TCC22R10G-58	TCC23R12G-60	TCC23R14G-60
Cooling Duty (Gross) - EC Fans	(1)	kW	475	445	475	620	645
Nom Input -Cooling Only		kW	144.5	137.7	141.0	193.2	195.0
EER	(2)		3.29	3.23	3.37	3.21	3.31
ESEER	(3)		4.98	4.46	4.79	5.08	5.24
Minimum Turndown (Capacity/% Max)	(6)	kW/%	85.1/14.7	91.1/15.7	89.2/15.4	86.2/9.9	85.6/9.8
Dimensions (H 2800 x W 2200)							
Length		mm	6022	4890	6022	7154	8286
Machine Weight	(7)	kg	5275	4790	5430	6950	7510
Operating Weight	(7)	kg	5415	4930	5570	7180	7740
Evaporator							
Total Max. Water Flow		l/s	41.8	41.8	41.8	67.7	67.7
Total Min. Water Flow		l/s	13.9	13.9	13.9	22.6	22.6
Condenser							
Face Area Total		m^2	23.7	18.9	23.7	28.4	33.2
Maximum Airflow - EC Fans		m^3/s	37.0	29.6	37.0	44.5	51.9
Condenser Fan EC							
Diameter		mm	800	800	800	800	800
Maximum Speed - EC Fans		rpm	1025	1025	1025	1025	1025
Compressor - Type							
Quantity			2	2	2	3	3
Refrigeration			Single Circuit	Dual Circuit			
Charge (Total) CCT1 + CCT2		kg	205	90 + 95	95 + 100	180 + 115	185 + 120
GWP Tonnes Equivalent CO_2		tCO_2e	1.4	0.6 + 0.7	0.7 + 0.7	1.3 + 0.8	1.3 + 0.8
Water System							
Water Inlet / Outlet			DN125	DN125	DN125	DN150	DN150
Water Drain / Bleed - Evap		inch	1/2	1/2	1/2	1/2	1/2
Water Volume		l	141	148	148	235	235
Minimum System Water Volume	(8)	l	1000	1001	1048	879	905
Max System Operating Pressure		Barg	10	10	10	10	10
Flow Rate		l/s	18.8	17.7	18.8	24.6	25.6
Pressure Drop		kPa	27.8	24.7	27.8	20.0	21.4

Electrical Data	Notes	Units	TCC12R10G-55	TCC22R08G-58	TCC22R10G-58	TCC23R12G-60	TCC23R14G-60
Full Load Amps	(9)	A	339	331	339	347	355
Maximum Start Amps		A	189	181	189	197	205
Recommended Mains Fuse Size		A	355	355	355	400	400
Evaporator							
Immersion Heater Rating		W	(2x250)	(2x170)	(2x170)	(2x170)	(2x170)
Condenser Fan - Per Fan (EC)							
Full Load Amps		A	3.9	3.9	3.9	3.9	3.9
Motor Rating		kW	2.56	2.56	2.56	2.56	2.56
Compressor - Per Compressor							
Nominal Run Amps		A	150	150	150	150	150
Motor Rating		kW	92	92	92	92	92

(1) Based on AC units performance at 13/7°C return/supply temperatures, 35°C ambient, 100% water.All performance data is supplied in accordance with BS EN 14511-1:2018
(2) EER = DX cooling output / (compressor input power + fan input power).
(3) ESEER based upon unit operating at 12/7 °C return / supply temperature, 35°C ambient.
(4) Nominal Free Cooling output at 16/10°C return/supply temperatures, 2°C ambient, 20% ethylene glycol.
(5) Ambient temperature that nominal DX duty can be achieved using Free Cooling only.
(6) This is a nominal figure based on full compressor duty, actual turndown depends on both condensing and evaporating temperatures.
(7) Based on standard unit without options, machine weight includes refrigerant charge, operating weight includes refrigerant charge and water volume. For unit weights with waterside options fitted please contact Airedale.
(8) For minimum system water volume calculation, refer to Design Features & Information - Minimum System Water Volume Calculations.
(9) Height based on standard fan, for optional fan dimensions please contact Airedale.

Technical Data

Mechanical and Electrical Data

Mechanical Data	Notes	Units	TCC23R16G-60	TCC23R18G-60	TCC24R18G-62	TCC24R20G-62
Cooling Duty (Gross) - EC Fans	(1)	kW	695	740	815	855
Nom Input -Cooling Only		kW	207.3	219.6	249.7	258.3
EER	(2)		3.35	3.37	3.26	3.31
ESEER	(3)		5.29	5.35	5.30	5.36
Minimum Turndown (Capacity/% Max)	(6)	kW/%	84.7/9.7	84.3/9.7	85.6/7.4	85.1/7.3
Dimensions (H 2800 x W 2200)						
Length		mm	9418	10550	10550	11682
Machine Weight	(7)	kg	7930	8610	8990	9930
Operating Weight	(7)	kg	8160	8840	9240	10180
Evaporator						
Total Max. Water Flow		l/s	67.7	67.7	83.1	83.1
Total Min. Water Flow		l/s	22.6	22.6	27.7	27.7
Condenser						
Face Area Total		m²	37.9	42.63	42.6	47.4
Maximum Airflow - EC Fans		m³/s	59.3	66.7	66.7	74.1
Condenser Fan EC						
Diameter		mm	800	800	800	800
Maximum Speed - EC Fans		rpm	1025	1025	1025	1025
Compressor - Type						
Quantity			3	3	4	4
Refrigeration				Dual Circuit		
Charge (Total) CCT1 + CCT2		kg	200 + 135	205 + 140	170 + 170	175 + 185
GWP Tonnes Equivalent CO_2		tCO_2e	1.4 + 0.9	1.4 + 1	1.2 + 1.2	1.2 + 1.3
Water System						
Water Inlet / Outlet			DN150	DN150	DN200	DN200
Water Drain / Bleed - Evap		inch	1/2	1/2	1/2	1/2
Water Volume		l	235	235	260	260
Minimum System Water Volume	(8)	l	966	1028	864	894
Max System Operating Pressure		Barg	10	10	10	10
Flow Rate		l/s	27.6	29.4	32.3	33.9
Pressure Drop		kPa	24.5	27.4	22.3	24.3

Electrical Data	Notes	Units	TCC23R16G-60	TCC23R18G-60	TCC24R18G-62	TCC24R20G-62
Full Load Amps	(9)	A	512	520	670	678
Maximum Start Amps		A	362	370	520	528
Recommended Mains Fuse Size		A	560	560	750	750
Evaporator						
Immersion Heater Rating		W	(2x170)	(2x170)	(2x170)	(2x170)
Condenser Fan - Per Fan (EC)						
Full Load Amps		A	3.9	3.9	3.9	3.9
Motor Rating		kW	2.56	2.56	2.56	2.56
Compressor - Per Compressor						
Nominal Run Amps		A	150	150	150	150
Motor Rating		kW	92	92	92	92

(1) Based on AC units performance at 13/7°C return/supply temperatures, 35°C ambient, 100% water.All performance data is supplied in accordance with BS EN 14511-1:2018
(2) EER = DX cooling output / (compressor input power + fan input power).
(3) ESEER based upon unit operating at 12/7 °C return / supply temperature, 35°C ambient.
(4) Nominal Free Cooling output at 16/10°C return/supply temperatures, 2°C ambient, 20% ethylene glycol.
(5) Ambient temperature that nominal DX duty can be achieved using Free Cooling only.
(6) This is a nominal figure based on full compressor duty, actual turndown depends on both condensing and evaporating temperatures.
(7) Based on standard unit without options, machine weight includes refrigerant charge, operating weight includes refrigerant charge and water volume. For unit weights with waterside options fitted please contact Airedale.
(8) For minimum system water volume calculation, refer to Design Features & Information - Minimum System Water Volume Calculations.
(9) Height based on standard fan, for optional fan dimensions please contact Airedale.

Technical Data TCC

Mechanical and Electrical Data

Mechanical Data	Notes	Units	TCC11X03Z-64	TCC11X04G-53	TCC11X06G-53	TCC11X08G-53	TCC12X08G-55	TCC12X10G-55
Cooling Duty (Gross) - EC Fans	(1)	kW	175	195	215	225	355	380
Nom Input -Cooling Only		kW	33.8	57.7	56.7	56.1	105.6	105.8
EER	(2)		5.18	3.38	3.79	4.01	3.36	3.59
ESEER	(3)		4.52	4.75	5.23	5.54	5.44	5.62
Minimum Turndown (Capacity/% Max)	(6)	kW/%	66.4/33.2	88/30.3	86.3/29.8	86.3/29.8	85.2/14.7	91.2/15.7
Dimensions (H 2800 x W 2200)								
Length		mm	3746	2626	3758	4890	4890	6022
Machine Weight	(7)	kg	1580	2745	3300	3785	4730	5275
Operating Weight	(7)	kg	1674	2845	3400	3885	4870	5415
Evaporator								
Total Max. Water Flow		l/s	16.5	23.0	23.0	23.0	41.8	41.8
Total Min. Water Flow		l/s	5.5	7.7	7.7	7.7	13.9	13.9
Condenser								
Face Area Total		m^2	7.11	9.5	14.2	18.9	18.9	23.7
Maximum Airflow - EC Fans		m^3/s	11.1	14.8	22.2	29.6	29.6	37.0
Condenser Fan EC								
Diameter		mm	800	800	800	800	800	800
Maximum Speed - EC Fans		rpm	730	730	730	730	730	730
Compressor - Type								
Quantity			1	1	1	1	2	2
Refrigeration					Single Circuit			
Charge (Total) CCT1 + CCT2		kg	75	85	90	100	195	205
GWP Tonnes Equivalent CO_2		tCO_2e	0.5	0.6	0.6	0.7	1.4	1.4
Water System								
Water Inlet / Outlet			DN100	DN100	DN100	DN100	DN125	DN125
Water Drain / Bleed - Evap		inch	1/2	1/2	1/2	1/2	1/2	1/2
Water Volume		l	40	102	102	102	141	141
Minimum System Water Volume	(8)	l	832	846	918	960	747	855
Max System Operating Pressure		Barg	10	10	10	10	10	10
Flow Rate		l/s	8.3	7.7	8.5	8.9	14.1	15.1
Pressure Drop		kPa	40.7	17.6	21.0	22.8	16.6	18.7

Electrical Data								
Full Load Amps	(9)	A	118	166	173	181	331	339
Maximum Start Amps		A	2	2	2	2	181	189
Recommended Mains Fuse Size		A	160	250	250	250	355	355
Evaporator								
Immersion Heater Rating		W	(2x170)	(2x250)	(2x250)	(2x250)	(2x250)	(2x250)
Condenser Fan - Per Fan (EC)								
Full Load Amps		A	3.9	3.9	3.9	3.9	3.9	3.9
Motor Rating		kW	2.56	2.56	2.56	2.56	2.56	2.56
Compressor - Per Compressor								
Nominal Run Amps		A	106	150	150	150	150	150
Motor Rating		kW	60	92	92	92	92	92

(1) Based on AC units performance at 13/7°C return/supply temperatures, 35°C ambient, 100% water.All performance data is supplied in accordance with BS EN 14511-1:2018
(2) EER = DX cooling output / (compressor input power + fan input power).
(3) ESEER based upon unit operating at 12/7 °C return / supply temperature, 35°C ambient.
(4) Nominal Free Cooling output at 16/10°C return/supply temperatures, 2°C ambient, 20% ethylene glycol.
(5) Ambient temperature that nominal DX duty can be achieved using Free Cooling only.
(6) This is a nominal figure based on full compressor duty, actual turndown depends on both condensing and evaporating temperatures.
(7) Based on standard unit without options, machine weight includes refrigerant charge, operating weight includes refrigerant charge and water volume. For unit weights with waterside options fitted please contact Airedale.
(8) For minimum system water volume calculation, refer to Design Features & Information - Minimum System Water Volume Calculations.
(9) Height based on standard fan, for optional fan dimensions please contact Airedale.

Technical Data

Mechanical and Electrical Data

Mechanical Data	Notes	Units	TCC22X08G-58	TCC22X10G-58	TCC23X12G-60	TCC23X14G-60	TCC23X16G-60
Cooling Duty (Gross) - EC Fans	(1)	kW	355	380	570	585	615
Nom Input -Cooling Only		kW	106.1	106.0	175.4	170.5	173.2
EER	(2)		3.34	3.58	3.25	3.43	3.55
ESEER	(3)		4.61	4.88	5.17	5.38	5.47
Minimum Turndown (Capacity/% Max)	(6)	kW/%	89.3/15.4	86.3/14.9	85.7/9.9	84.7/9.7	84.4/9.7
Dimensions (H 2800 x W 2200)							
Length		mm	4890	6022	7154	8286	9418
Machine Weight	(7)	kg	4790	5430	6950	7510	7930
Operating Weight	(7)	kg	4930	5570	7180	7740	8160
Evaporator							
Total Max. Water Flow		l/s	41.8	41.8	67.7	67.7	67.7
Total Min. Water Flow		l/s	13.9	13.9	22.6	22.6	22.6
Condenser							
Face Area Total		m²	18.9	23.68	28.4	33.2	37.9
Maximum Airflow - EC Fans		m³/s	29.6	37.0	44.5	51.9	59.3
Condenser Fan EC							
Diameter		mm	800	800	800	800	800
Maximum Speed - EC Fans		rpm	730	730	730	730	730
Compressor - Type							
Quantity			2	2	3	3	3
Refrigeration					Dual Circuit		
Charge (Total) CCT1 + CCT2		kg	90 + 95	95 + 100	180 + 115	185 + 120	200 + 135
GWP Tonnes Equivalent CO_2		tCO_2e	0.6 + 0.7	0.7 + 0.7	1.3 + 0.8	1.3 + 0.8	1.4 + 0.9
Water System							
Water Inlet / Outlet			DN125	DN125	DN150	DN150	DN150
Water Drain / Bleed - Evap		inch	1/2	1/2	1/2	1/2	1/2
Water Volume		l	148	148	235	235	235
Minimum System Water Volume	(8)	l	783	811	808	813	854
Max System Operating Pressure		Barg	10	10	10	10	10
Flow Rate		l/s	14.1	15.1	22.6	23.2	24.4
Pressure Drop		kPa	16.6	18.7	17.2	18.0	19.7

Electrical Data	Notes	Units	TCC22X08G-58	TCC22X10G-58	TCC23X12G-60	TCC23X14G-60	TCC23X16G-60
Full Load Amps	(9)	A	331	339	347	505	512
Maximum Start Amps		A	181	189	197	355	362
Recommended Mains Fuse Size		A	355	355	355	560	560
Evaporator							
Immersion Heater Rating		W	(2x170)	(2x170)	(2x170)	(2x170)	(2x170)
Condenser Fan - Per Fan (EC)							
Full Load Amps		A	3.9	3.9	3.9	3.9	3.9
Motor Rating		kW	2.56	2.56	2.56	2.56	2.56
Compressor - Per Compressor							
Nominal Run Amps		A	150	150	150	150	150
Motor Rating		kW	92	92	92	92	92

(1) Based on AC units performance at 13/7°C return/supply temperatures, 35°C ambient, 100% water.All performance data is supplied in accordance with BS EN 14511-1:2018
(2) EER = DX cooling output / (compressor input power + fan input power).
(3) ESEER based upon unit operating at 12/7 °C return / supply temperature, 35°C ambient.
(4) Nominal Free Cooling output at 16/10°C return/supply temperatures, 2°C ambient, 20% ethylene glycol.
(5) Ambient temperature that nominal DX duty can be achieved using Free Cooling only.
(6) This is a nominal figure based on full compressor duty, actual turndown depends on both condensing and evaporating temperatures.
(7) Based on standard unit without options, machine weight includes refrigerant charge, operating weight includes refrigerant charge and water volume. For unit weights with waterside options fitted please contact Airedale.
(8) For minimum system water volume calculation, refer to Design Features & Information - Minimum System Water Volume Calculations.
(9) Height based on standard fan, for optional fan dimensions please contact Airedale.

Technical Data

Mechanical and Electrical Data

Mechanical Data	Notes	Units	TCC23X18G-60	TCC24X18G-62	TCC24X20G-62
Cooling Duty (Gross) - EC Fans	(1)	kW	660	700	735
Nom Input -Cooling Only		kW	182.9	210.0	211.0
EER	(2)		3.61	3.33	3.48
ESEER	(3)		5.58	5.59	5.66
Minimum Turndown (Capacity/% Max)	(6)	kW/%	85.7/9.9	85.2/7.3	88.5/7.6
Dimensions (H 2800 x W 2200)					
Length		mm	10550	10550	11682
Machine Weight	(7)	kg	8610	8990	9930
Operating Weight	(7)	kg	8840	9240	10180
Evaporator					
Total Max. Water Flow		l/s	67.7	83.1	83.1
Total Min. Water Flow		l/s	22.6	27.7	27.7
Condenser					
Face Area Total		m^2	42.6	42.6	47.4
Maximum Airflow - EC Fans		m^3/s	66.7	66.7	74.1
Condenser Fan EC					
Diameter		mm	800	800	800
Maximum Speed - EC Fans		rpm	730	730	730
Compressor - Type					
Quantity			3	4	4
Refrigeration				Dual Circuit	
Charge (Total) CCT1 + CCT2		kg	205 + 140	170 + 170	175 + 185
GWP Tonnes Equivalent CO_2		tCO_2e	1.4 + 1	1.2 + 1.2	1.2 + 1.3
Water System					
Water Inlet / Outlet			DN150	DN200	DN200
Water Drain / Bleed - Evap		inch	1/2	1/2	1/2
Water Volume		l	235	260	260
Minimum System Water Volume	(8)	l	936	732	800
Max System Operating Pressure		Barg	10	10	10
Flow Rate		l/s	26.2	27.8	29.2
Pressure Drop		kPa	22.3	17.1	18.6

Electrical Data					
Full Load Amps	(9)	A	520	670	678
Maximum Start Amps		A	370	520	528
Recommended Mains Fuse Size		A	560	670	670
Evaporator					
Immersion Heater Rating		W	(2x170)	(2x170)	(2x170)
Condenser Fan - Per Fan (EC)					
Full Load Amps		A	3.9	3.9	3.9
Motor Rating		kW	2.56	2.56	2.56
Compressor - Per Compressor					
Nominal Run Amps		A	150	150	150
Motor Rating		kW	92	92	92

(1) Based on AC units performance at 13/7°C return/supply temperatures, 35°C ambient, 100% water.All performance data is supplied in accordance with BS EN 14511-1:2018
(2) EER = DX cooling output / (compressor input power + fan input power).
(3) ESEER based upon unit operating at 12/7 °C return / supply temperature, 35°C ambient.
(4) Nominal Free Cooling output at 16/10°C return/supply temperatures, 2°C ambient, 20% ethylene glycol.
(5) Ambient temperature that nominal DX duty can be achieved using Free Cooling only.
(6) This is a nominal figure based on full compressor duty, actual turndown depends on both condensing and evaporating temperatures.
(7) Based on standard unit without options, machine weight includes refrigerant charge, operating weight includes refrigerant charge and water volume. For unit weights with waterside options fitted please contact Airedale.
(8) For minimum system water volume calculation, refer to Design Features & Information - Minimum System Water Volume Calculations.
(9) Height based on standard fan, for optional fan dimensions please contact Airedale.

Technical Data

Sound Data

TCC - EC Fans

		Single Octave Sound Levels (dB) Frequency (Hz)								
		63	125	250	500	1000	2000	4000	8000	Overall [dB(A)]
TCC11R03Z-64	Sound Power	89	86	85	81	82	78	76	75	86
	Sound Pressure @10m	57	54	53	49	49	46	44	43	54
TCC11R04G-53	Sound Power	60	60	65	76	81	76	80	81	86
	Sound Pressure @10m	57	54	53	50	52	47	48	49	56
TCC11R06G-53	Sound Power	60	60	65	76	81	76	80	81	86
	Sound Pressure @10m	51	51	50	48	50	45	47	49	55
TCC11R08G-53	Sound Power	60	60	65	76	81	76	80	81	86
	Sound Pressure @10m	53	52	48	47	50	45	47	49	55
TCC12R08G-55	Sound Power	63	63	68	79	84	79	83	84	89
	Sound Pressure @10m	59	57	55	52	54	49	50	52	59
TCC12R10G-55	Sound Power	63	63	68	79	84	79	83	84	89
	Sound Pressure @10m	57	55	54	51	54	48	50	52	58
TCC22R08G-58	Sound Power	63	63	68	79	84	79	83	84	89
	Sound Pressure @10m	59	57	55	52	54	49	50	52	59
TCC22R10G-58	Sound Power	63	63	68	79	84	79	83	84	89
	Sound Pressure @10m	56	55	54	51	54	48	50	52	58
TCC23R12G-60	Sound Power	65	65	69	81	86	81	84	86	91
	Sound Pressure @10m	59	57	56	53	56	50	52	53	60
TCC23R14G-60	Sound Power	65	65	69	81	86	81	84	86	91
	Sound Pressure @10m	57	56	55	52	55	50	52	53	60
TCC23R16G-60	Sound Power	65	65	69	81	86	81	84	86	91
	Sound Pressure @10m	56	55	55	52	55	49	51	53	59
TCC23R18G-60	Sound Power	65	65	69	81	86	81	84	86	91
	Sound Pressure @10m	56	55	54	52	55	49	51	53	59
TCC24R18G-62	Sound Power	66	66	71	83	87	82	86	87	92
	Sound Pressure @10m	58	56	56	53	56	51	53	54	61
TCC24R20G-62	Sound Power	66	66	71	83	87	82	86	87	92
	Sound Pressure @10m	57	56	55	53	56	50	52	54	60

(1) dB(A) is the overall sound level, measured on the A scale.
(2) All sound data measured at nominal conditions: Water in/out 13/7°C at 35°C ambient.
(3) Based on unit with a 300mm plenum, for units fitted with optional extras, please contact Airedale.

Technical Data

Sound Data

TCC - EC Fans

		Single Octave Sound Levels (dB) Frequency (Hz)								
		63	125	250	500	1000	2000	4000	8000	Overall [dB(A)]
TCC11X03Z-64	Sound Power	64	64	73	74	76	74	76	75	82
	Sound Pressure @10m	49	48	46	44	45	43	44	43	51
TCC11X04G-53	Sound Power	83	82	78	78	82	77	80	81	87
	Sound Pressure @10m	50	49	46	46	50	45	47	49	55
TCC11X06G-53	Sound Power	84	83	80	79	82	77	80	81	87
	Sound Pressure @10m	52	51	48	47	50	45	47	49	55
TCC11X08G-53	Sound Power	82	81	78	78	82	77	80	81	87
	Sound Pressure @10m	49	49	46	46	49	44	47	49	54
TCC12X08G-55	Sound Power	86	85	81	81	85	80	83	84	90
	Sound Pressure @10m	53	52	49	49	52	47	50	52	57
TCC12X10G-55	Sound Power	86	86	82	82	85	80	83	84	90
	Sound Pressure @10m	54	53	50	49	52	47	50	52	57
TCC22X08G-58	Sound Power	86	85	81	81	85	80	83	84	90
	Sound Pressure @10m	53	52	49	49	52	47	50	52	57
TCC22X10G-58	Sound Power	86	86	82	82	85	80	83	84	90
	Sound Pressure @10m	54	53	50	49	52	47	50	52	57
TCC23X12G-60	Sound Power	87	86	83	83	87	82	84	86	92
	Sound Pressure @10m	55	54	50	50	54	49	52	53	59
TCC23X14G-60	Sound Power	88	87	84	83	87	82	84	86	92
	Sound Pressure @10m	55	54	51	51	54	49	52	53	59
TCC23X16G-60	Sound Power	89	88	84	84	87	82	84	86	92
	Sound Pressure @10m	56	55	51	51	54	49	51	53	59
TCC23X18G-60	Sound Power	89	88	85	84	87	82	84	86	92
	Sound Pressure @10m	56	55	52	51	54	49	51	53	59
TCC24X18G-62	Sound Power	89	88	85	85	88	83	86	87	93
	Sound Pressure @10m	56	55	52	52	55	50	53	54	60
TCC24X20G-62	Sound Power	89	89	85	85	88	83	86	87	93
	Sound Pressure @10m	56	55	52	52	55	50	52	54	60

(1) dB(A) is the overall sound level, measured on the A scale.
(2) All sound data measured at nominal conditions: Water in/out 13/7°C at 35°C ambient.
(3) Based on unit with a 300mm plenum, for units fitted with optional extras, please contact Airedale.

Technical Data - TCF

Mechanical and Electrical Data

Mechanical Data	Notes	Units	TCF11R06G-54	TCF11R08G-54	TCF12R08G-56	TCF12R10G-57
Cooling Duty (Gross) - EC Fans	(1)	kW	275	285	445	475
Nom Input -Cooling Only		kW	75.2	73.5	131.0	130.7
EER	(2)		3.65	3.88	3.40	3.63
ESEER	(3)		4.78	5.07	4.79	4.96
Nominal Output - Free Cooling	(4)	kW	263.3	313.3	379.4	445.6
Ambient when Free Cooling = 100% DX	(5)	°C	1.4	3.2	-0.4	1.1
Minimum Turndown (Capacity/% Max)	(6)	kW/%	88.6/30.5	86.7/29.9	86.9/15	85.7/14.8
Dimensions (H 2800 x W 2200)						
Length		mm	3758	4890	4890	6022
Machine Weight	(7)	kg	4050	4835	5600	6620
Operating Weight	(7)	kg	4470	5345	6000	7315
Evaporator						
Total Max. Water Flow		l/s	28.2	28.2	52.4	52.4
Total Min. Water Flow		l/s	9.4	9.4	17.5	17.5
Condenser						
Face Area Total		m²	14.2	18.9	18.9	23.7
Maximum Airflow - EC Fans		m³/s	22.2	29.6	29.6	37.0
Condenser Fan EC						
Quantity			6	8	8	10
Diameter		mm	800	800	800	800
Maximum Speed - EC Fans		rpm	1025	1025	1025	1025
Compressor - Type						
Quantity			1	1	2	2
Refrigeration				Single Circuit		
Charge (Total) CCT1 + CCT2		kg	85	95	140	195
GWP Tonnes Equivalent CO_2		tCO_2e	0.6	0.7	1	1.4
Water System						
Water Inlet / Outlet			DN100	DN100	DN125	DN125
Water Drain / Bleed - Evap		inch	1/2	1/2	1/2	1/2
Water Volume		l	424	514	401	700
Minimum System Water Volume	(8)	l	1314	1335	1046	1101
Max System Operating Pressure		Barg	10	10	10	10
Flow Rate		l/s	11.6	12.0	18.7	20.0
Pressure Drop		kPa	83.8	81.3	78.3	85.0

Electrical Data	Notes	Units	TCF11R06G-54	TCF11R08G-54	TCF12R08G-56	TCF12R10G-57
Full Load Amps	(9)	A	173	181	331	339
Maximum Start Amps		A	2	2	181	189
Recommended Mains Fuse Size		A	250	250	355	355
Evaporator						
Immersion Heater Rating		W	(2x250)	(2x250)	(2x250)	(2x250)
Condenser Fan - Per Fan (EC)						
Full Load Amps		A	3.9	3.9	3.9	3.9
Motor Rating		kW	2.6	2.6	2.6	2.6
Compressor - Per Compressor						
Nominal Run Amps		A	150	150	150	150
Motor Rating		kW	92	92	92	92

(1) Based on FC units performance at 16/10°C return/supply temperatures, 35°C ambient, 20% ethylene glycol. All performance data is supplied in accordance with BS EN 14511-1:2018
(2) EER = DX cooling output / (compressor input power + fan input power).
(3) ESEER based upon unit operating at 12/7 °C return / supply temperature, 35°C ambient.
(4) Nominal Free Cooling output at 16/10°C return/supply temperatures, 2°C ambient, 20% ethylene glycol.
(5) Ambient temperature that nominal DX duty can be achieved using Free Cooling only.
(6) This is a nominal figure based on full compressor duty, actual turndown depends on both condensing and evaporating temperatures.
(7) Based on standard unit without options, machine weight includes refrigerant charge, operating weight includes refrigerant charge and water volume. For unit weights with waterside options fitted please contact Airedale.
(8) For minimum system water volume calculation, refer to Design Features & Information - Minimum System Water Volume Calculations.
(9) Based on full load conditions and EC fans. Pump electrical data is available from Airedale upon request.

Technical Data

Mechanical and Electrical Data

Mechanical Data	Notes	Units	TCF12R12G-57	TCF22R10G-59	TCF23R12G-61	TCF23R14G-61	TCF23R16G-61
Cooling Duty (Gross) - EC Fans	(1)	kW	505	475	660	680	710
Nom Input -Cooling Only		kW	135.1	129.1	193.9	191.8	194.6
EER	(2)		3.74	3.68	3.40	3.54	3.65
ESEER	(3)		5.08	4.56	4.63	4.80	4.87
Nominal Output - Free Cooling	(4)	kW	507.5	445.6	566.6	629.4	692.6
Ambient when Free Cooling = 100% DX	(5)	°C	2.1	1.1	-0.3	0.9	1.7
Minimum Turndown (Capacity/% Max)	(6)	kW/%	84.8/14.6	90/15.5	86.9/10	86.2/9.9	85.2/9.8
Dimensions (H 2800 x W 2200)							
Length		mm	7154	6022	7154	8286	9418
Machine Weight	(7)	kg	7520	6730	8850	9760	10490
Operating Weight	(7)	kg	8335	7370	9770	10780	11660
Evaporator							
Total Max. Water Flow		l/s	52.4	52.4	78.9	78.9	78.9
Total Min. Water Flow		l/s	17.5	17.5	26.3	26.3	26.3
Condenser							
Face Area Total		m²	28.4	23.7	28.4	33.16	37.9
Maximum Airflow - EC Fans		m³/s	44.5	37.0	44.5	51.9	59.3
Condenser Fan EC							
Quantity			12	10	12	14	16
Diameter		mm	800	800	800	800	800
Maximum Speed - EC Fans		rpm	1025	1025	1025	1025	1025
Compressor - Type							
Quantity			2	2	3	3	3
Refrigeration			Single Circuit	Dual Circuit			
Charge (Total) CCT1 + CCT2		kg	215	95 + 95	180 + 115	185 + 120	200 + 135
GWP Tonnes Equivalent CO_2		tCO_2e	1.5	0.7 + 0.7	1.3 + 0.8	1.3 + 0.8	1.4 + 0.9
Water System							
Water Inlet / Outlet			DN125	DN125	DN150	DN150	DN150
Water Drain / Bleed - Evap		inch	1/2	1/2	1/2	1/2	1/2
Water Volume		l	819	735	1026	1138	1282
Minimum System Water Volume	(8)	l	1155	1153	1034	1055	1090
Max System Operating Pressure		Barg	10	10	10	10	10
Flow Rate		l/s	21.2	20.0	27.8	28.6	29.9
Pressure Drop		kPa	88.6	84.3	83.1	81.3	83.3

Electrical Data							
Full Load Amps	(9)	A	347	347	497	505	512
Maximum Start Amps		A	197	197	347	355	362
Recommended Mains Fuse Size		A	400	355	560	560	560
Evaporator							
Immersion Heater Rating		W	(2x250)	(2x170)	(2x170)	(2x170)	(2x170)
Condenser Fan - Per Fan (EC)							
Full Load Amps		A	3.9	3.9	3.9	3.9	3.9
Motor Rating		kW	2.6	2.6	2.6	2.6	2.6
Compressor - Per Compressor							
Nominal Run Amps		A	150	150	150	150	150
Motor Rating		kW	92	92	92	92	92

(1) Based on FC units performance at 16/10°C return/supply temperatures, 35°C ambient, 20% ethylene glycol. All performance data is supplied in accordance with BS EN 14511-1:2018
(2) EER = DX cooling output / (compressor input power + fan input power).
(3) ESEER based upon unit operating at 12/7 °C return / supply temperature, 35°C ambient.
(4) Nominal Free Cooling output at 16/10°C return/supply temperatures, 2°C ambient, 20% ethylene glycol.
(5) Ambient temperature that nominal DX duty can be achieved using Free Cooling only.
(6) This is a nominal figure based on full compressor duty, actual turndown depends on both condensing and evaporating temperatures.
(7) Based on standard unit without options, machine weight includes refrigerant charge, operating weight includes refrigerant charge and water volume. For unit weights with waterside options fitted please contact Airedale.
(8) For minimum system water volume calculation, refer to Design Features & Information - Minimum System Water Volume Calculations.
(9) Based on full load conditions and EC fans. Pump electrical data is available from Airedale upon request.

Technical Data

Mechanical and Electrical Data

Mechanical Data	Notes	Units	TCF23R18G-61	TCF24R18G-63	TCF24R20G-63
Cooling Duty (Gross) - EC Fans	(1)	kW	740	890	930
Nom Input -Cooling Only		kW	199.0	255.7	261.6
EER	(2)		3.72	3.48	3.55
ESEER	(3)		4.96	4.89	4.96
Nominal Output - Free Cooling	(4)	kW	753.3	815.5	N/A
Ambient when Free Cooling = 100% DX	(5)	°C	2.2	0.7	N/A
Minimum Turndown (Capacity/% Max)	(6)	kW/%	84.8/9.7	86.2/7.4	85.7/7.4
Dimensions (H 2800 x W 2200)					
Length		mm	10550	10550	11682
Machine Weight	(7)	kg	11300	12650	13850
Operating Weight	(7)	kg	12530	14100	15460
Evaporator					
Total Max. Water Flow		l/s	78.9	106.3	106.3
Total Min. Water Flow		l/s	26.3	35.4	35.4
Condenser					
Face Area Total		m^2	42.6	42.6	47.4
Maximum Airflow - EC Fans		m^3/s	66.7	66.7	74.1
Condenser Fan EC					
Quantity			18	18	20
Diameter		mm	800	800	800
Maximum Speed - EC Fans		rpm	1025	1025	1025
Compressor - Type					
Quantity			3	4	4
Refrigeration				Dual Circuit	
Charge (Total) CCT1 + CCT2		kg	200 + 140	195 + 195	205 + 210
GWP Tonnes Equivalent CO_2		tCO_2e	1.4 + 1	1.4 + 1.4	1.4 + 1.5
Water System					
Water Inlet / Outlet			DN150	DN200	DN200
Water Drain / Bleed - Evap		inch	1/2	1/2	1/2
Water Volume		l	1343	1954	2160
Minimum System Water Volume	(8)	l	1124	1032	1078
Max System Operating Pressure		Barg	10	10	10
Flow Rate		l/s	31.1	37.4	39.1
Pressure Drop		kPa	85.6	73.3	75.0

Electrical Data					
Full Load Amps	(9)	A	520	670	678
Maximum Start Amps		A	370	520	528
Recommended Mains Fuse Size		A	560	750	750
Evaporator					
Immersion Heater Rating		W	(2x170)	(2x250)	(2x250)
Condenser Fan - Per Fan (EC)					
Full Load Amps		A	3.9	3.9	3.9
Motor Rating		kW	2.6	2.6	2.6
Compressor - Per Compressor					
Nominal Run Amps		A	150	150	150
Motor Rating		kW	92	92	92

(1) Based on FC units performance at 16/10°C return/supply temperatures, 35°C ambient, 20% ethylene glycol. All performance data is supplied in accordance with BS EN 14511-1:2018
(2) EER = DX cooling output / (compressor input power + fan input power).
(3) ESEER based upon unit operating at 12/7 °C return / supply temperature, 35°C ambient.
(4) Nominal Free Cooling output at 16/10°C return/supply temperatures, 2°C ambient, 20% ethylene glycol.
(5) Ambient temperature that nominal DX duty can be achieved using Free Cooling only.
(6) This is a nominal figure based on full compressor duty, actual turndown depends on both condensing and evaporating temperatures.
(7) Based on standard unit without options, machine weight includes refrigerant charge, operating weight includes refrigerant charge and water volume. For unit weights with waterside options fitted please contact Airedale.
(8) For minimum system water volume calculation, refer to Design Features & Information - Minimum System Water Volume Calculations.
(9) Based on full load conditions and EC fans. Pump electrical data is available from Airedale upon request.

Technical Data TCF

Mechanical and Electrical Data

Mechanical Data	Notes	Units	TCF11X06G-54	TCF11X08G-54	TCF12X08G-56	TCF12X10G-57
Cooling Duty (Gross) - EC Fans	(1)	kW	225	240	420	440
Nom Input -Cooling Only		kW	57.3	57.4	129.9	121.9
EER	(2)		3.92	4.18	3.23	3.61
ESEER	(3)		4.88	5.17	4.82	5.04
Nominal Output - Free Cooling	(4)	kW	N/A	259.3	308.9	367.4
Ambient when Free Cooling = 100% DX	(5)	°C	N/A	3.0	-3.0	-0.8
Minimum Turndown (Capacity/% Max)	(6)	kW/%	86.7/29.9	86.9/29.9	85.7/14.8	84.8/14.6
Dimensions (H 2800 x W 2200)						
Length		mm	3758	4890	4890	6022
Machine Weight	(7)	kg	4050	4835	5600	6620
Operating Weight	(7)	kg	4470	5345	6000	7315
Evaporator						
Total Max. Water Flow		l/s	28.2	28.2	52.4	52.4
Total Min. Water Flow		l/s	9.4	9.4	17.5	17.5
Condenser						
Face Area Total		m²	14.2	18.9	18.95	23.7
Maximum Airflow - EC Fans		m³/s	22.2	29.6	29.6	37.0
Condenser Fan EC						
Quantity			6	8	8	10
Diameter		mm	800	800	800	800
Maximum Speed - EC Fans		rpm	715	715	715	715
Compressor - Type						
Quantity			1	1	2	2
Refrigeration				Single Circuit		
Charge (Total) CCT1 + CCT2		kg	85	95	140	195
GWP Tonnes Equivalent CO_2		tCO_2e	0.6	0.7	1	1.4
Water System						
Water Inlet / Outlet			DN100	DN100	DN125	DN125
Water Drain / Bleed - Evap		inch	1/2	1/2	1/2	1/2
Water Volume		l	424	514	401	700
Minimum System Water Volume	(8)	l	1054	1124	974	1006
Max System Operating Pressure		Barg	10	10	10	10
Flow Rate		l/s	9.5	10.1	17.7	18.5
Pressure Drop		kPa	58.3	59.3	70.7	74.3

Electrical Data						
Full Load Amps	(9)	A	173	181	331	339
Maximum Start Amps		A	2	2	181	189
Recommended Mains Fuse Size		A	250	250	355	355
Evaporator						
Immersion Heater Rating		W	(2x250)	(2x250)	(2x250)	(2x250)
Condenser Fan - Per Fan (EC)						
Full Load Amps		A	3.9	3.9	3.9	3.9
Motor Rating		kW	2.6	2.6	2.6	2.6
Compressor - Per Compressor						
Nominal Run Amps		A	150	150	150	150
Motor Rating		kW	92	92	92	92

(1) Based on FC units performance at 16/10°C return/supply temperatures, 35°C ambient, 20% ethylene glycol. All performance data is supplied in accordance with BS EN 14511-1:2018
(2) EER = DX cooling output / (compressor input power + fan input power).
(3) ESEER based upon unit operating at 12/7 °C return / supply temperature, 35°C ambient.
(4) Nominal Free Cooling output at 16/10°C return/supply temperatures, 2°C ambient, 20% ethylene glycol.
(5) Ambient temperature that nominal DX duty can be achieved using Free Cooling only.
(6) This is a nominal figure based on full compressor duty, actual turndown depends on both condensing and evaporating temperatures.
(7) Based on standard unit without options, machine weight includes refrigerant charge, operating weight includes refrigerant charge and water volume. For unit weights with waterside options fitted please contact Airedale.
(8) For minimum system water volume calculation, refer to Design Features & Information - Minimum System Water Volume Calculations.
(9) Based on full load conditions and EC fans. Pump electrical data is available from Airedale upon request.

Technical Data

Mechanical and Electrical Data

Mechanical Data	Notes	Units	TCF12X12G-57	TCF22X10G-59	TCF23X12G-61	TCF23X14G-61
Cooling Duty (Gross) - EC Fans	(1)	kW	470	420	630	645
Nom Input -Cooling Only		kW	124.0	113.4	195.3	186.6
EER	(2)		3.79	3.70	3.23	3.46
ESEER	(3)		5.15	4.55	4.61	4.83
Nominal Output - Free Cooling	(4)	kW	425.3	362.3	463.4	521.4
Ambient when Free Cooling = 100% DX	(5)	°C	0.5	-0.2	-3.0	-1.3
Minimum Turndown (Capacity/% Max)	(6)	kW/%	90/15.5	86.9/15	86.2/9.9	85.2/9.8
Dimensions (H 2800 x W 2200)						
Length		mm	7154	6022	7154	8286
Machine Weight	(7)	kg	7520	6730	8850	9760
Operating Weight	(7)	kg	8335	7370	9770	10780
Evaporator						
Total Max. Water Flow		l/s	52.4	52.4	78.9	78.9
Total Min. Water Flow		l/s	17.5	17.5	26.3	26.3
Condenser						
Face Area Total		m^2	28.4	23.7	28.4	33.2
Maximum Airflow - EC Fans		m^3/s	44.5	37.0	44.5	51.9
Condenser Fan EC						
Quantity			12	10	12	14
Diameter		mm	800	800	800	800
Maximum Speed - EC Fans		rpm	715	715	715	715
Compressor - Type						
Quantity			2	2	3	3
Refrigeration			Single Circuit		Dual Circuit	
Charge (Total) CCT1 + CCT2		kg	215	95 + 95	180 + 115	185 + 120
GWP Tonnes Equivalent CO_2		tCO_2e	1.5	0.7 + 0.7	1.3 + 0.8	1.3 + 0.8
Water System						
Water Inlet / Outlet			DN125	DN125	DN150	DN150
Water Drain / Bleed - Evap		inch	1/2	1/2	1/2	1/2
Water Volume		l	819	735	1026	1138
Minimum System Water Volume	(8)	l	1141	987	977	990
Max System Operating Pressure		Barg	10	10	10	10
Flow Rate		l/s	19.8	17.7	26.5	27.1
Pressure Drop		kPa	78.0	67.9	76.7	74.2

Electrical Data	Notes	Units	TCF12X12G-57	TCF22X10G-59	TCF23X12G-61	TCF23X14G-61
Full Load Amps	(9)	A	347	339	497	505
Maximum Start Amps		A	197	189	347	355
Recommended Mains Fuse Size		A	355	355	560	560
Evaporator						
Immersion Heater Rating		W	(2x250)	(2x170)	(2x170)	(2x170)
Condenser Fan - Per Fan (EC)						
Full Load Amps		A	3.9	3.9	3.9	3.9
Motor Rating		kW	2.6	2.56	2.56	2.56
Compressor - Per Compressor						
Nominal Run Amps		A	150	150	150	150
Motor Rating		kW	92	92	92	92

(1) Based on FC units performance at 16/10°C return/supply temperatures, 35°C ambient, 20% ethylene glycol. All performance data is supplied in accordance with BS EN 14511-1:2018
(2) EER = DX cooling output / (compressor input power + fan input power).
(3) ESEER based upon unit operating at 12/7 °C return / supply temperature, 35°C ambient.
(4) Nominal Free Cooling output at 16/10°C return/supply temperatures, 2°C ambient, 20% ethylene glycol.
(5) Ambient temperature that nominal DX duty can be achieved using Free Cooling only.
(6) This is a nominal figure based on full compressor duty, actual turndown depends on both condensing and evaporating temperatures.
(7) Based on standard unit without options, machine weight includes refrigerant charge, operating weight includes refrigerant charge and water volume. For unit weights with waterside options fitted please contact Airedale.
(8) For minimum system water volume calculation, refer to Design Features & Information - Minimum System Water Volume Calculations.
(9) Based on full load conditions and EC fans. Pump electrical data is available from Airedale upon request.

Technical Data

Mechanical and Electrical Data

Mechanical Data	Notes	Units	TCF23X16G-61	TCF23X18G-61	TCF24X18G-63	TCF24X20G-63
Cooling Duty (Gross) - EC Fans	(1)	kW	660	690	845	865
Nom Input -Cooling Only		kW	181.2	183.5	249.8	245.7
EER	(2)		3.64	3.76	3.38	3.52
ESEER	(3)		4.93	5.05	4.92	5.03
Nominal Output - Free Cooling	(4)	kW	576.4	633.5	674.1	731.1
Ambient when Free Cooling = 100% DX	(5)	°C	-0.0	0.8	-1.5	-0.6
Minimum Turndown (Capacity/% Max)	(6)	kW/%	84.8/9.7	86.2/9.9	85.7/7.4	85.7/7.4
Dimensions (H 2800 x W 2200)						
Length		mm	9418	10550	10550	11682
Machine Weight	(7)	kg	10490	11300	12650	13850
Operating Weight	(7)	kg	11660	12530	14100	15460
Evaporator						
Total Max. Water Flow		l/s	78.9	78.9	106.3	106.3
Total Min. Water Flow		l/s	26.3	26.3	35.4	35.4
Condenser						
Face Area Total		m²	37.9	42.6	42.6	47.4
Maximum Airflow - EC Fans		m³/s	59.3	66.7	66.7	74.1
Condenser Fan EC						
Quantity			16	18	18	20
Diameter		mm	800	800	800	800
Maximum Speed - EC Fans		rpm	715	715	715	715
Compressor - Type						
Quantity			3	3	4	4
Refrigeration				Dual Circuit		
Charge (Total) CCT1 + CCT2		kg	200 + 135	200 + 140	195 + 195	205 + 210
GWP Tonnes Equivalent CO_2		tCO_2e	1.4 + 0.9	1.4 + 1	1.4 + 1.4	1.4 + 1.5
Water System						
Water Inlet / Outlet			DN150	DN150	DN200	DN200
Water Drain / Bleed - Evap		inch	1/2	1/2	1/2	1/2
Water Volume		l	1282	1343	1954	2160
Minimum System Water Volume	(8)	l	1003	1070	980	1003
Max System Operating Pressure		Barg	10	10	10	10
Flow Rate		l/s	27.8	29.0	35.5	36.4
Pressure Drop		kPa	73.3	75.7	67.0	66.1

Electrical Data	Notes	Units	TCF23X16G-61	TCF23X18G-61	TCF24X18G-63	TCF24X20G-63
Full Load Amps	(9)	A	512	520	670	678
Maximum Start Amps		A	362	370	520	528
Recommended Mains Fuse Size		A	560	560	670	670
Evaporator						
Immersion Heater Rating		W	(2x170)	(2x170)	(2x250)	(2x250)
Condenser Fan - Per Fan (EC)						
Full Load Amps		A	3.9	3.9	3.9	3.9
Motor Rating		kW	2.56	2.56	2.56	2.56
Compressor - Per Compressor						
Nominal Run Amps		A	150	150	150	150
Motor Rating		kW	92	92	92	92

(1) Based on FC units performance at 16/10°C return/supply temperatures, 35°C ambient, 20% ethylene glycol. All performance data is supplied in accordance with BS EN 14511-1:2018
(2) EER = DX cooling output / (compressor input power + fan input power).
(3) ESEER based upon unit operating at 12/7 °C return / supply temperature, 35°C ambient.
(4) Nominal Free Cooling output at 16/10°C return/supply temperatures, 2°C ambient, 20% ethylene glycol.
(5) Ambient temperature that nominal DX duty can be achieved using Free Cooling only.
(6) This is a nominal figure based on full compressor duty, actual turndown depends on both condensing and evaporating temperatures.
(7) Based on standard unit without options, machine weight includes refrigerant charge, operating weight includes refrigerant charge and water volume. For unit weights with waterside options fitted please contact Airedale.
(8) For minimum system water volume calculation, refer to Design Features & Information - Minimum System Water Volume Calculations.
(9) Based on full load conditions and EC fans. Pump electrical data is available from Airedale upon request.

Technical Data

Sound Data

TCF - EC Fans

		Single Octave Sound Levels (dB) Frequency (Hz)								
		63	125	250	500	1000	2000	4000	8000	Overall [dB(A)]
TCF11R06G-54	Sound Power	60	60	65	76	81	76	80	81	86
	Sound Pressure @10m	53	52	51	49	51	46	47	49	56
TCF11R08G-54	Sound Power	60	60	65	76	81	76	80	81	86
	Sound Pressure @10m	50	49	49	47	50	45	47	49	55
TCF12R08G-56	Sound Power	63	63	68	79	84	79	83	84	89
	Sound Pressure @10m	59	56	55	52	54	49	50	52	59
TCF12R10G-57	Sound Power	63	63	68	79	84	79	83	84	89
	Sound Pressure @10m	56	54	54	51	54	48	50	52	58
TCF12R12G-57	Sound Power	63	63	68	79	84	79	83	84	89
	Sound Pressure @10m	54	53	53	50	53	48	50	52	58
TCF22R10G-59	Sound Power	63	63	68	79	84	79	83	84	89
	Sound Pressure @10m	56	54	54	51	54	48	50	52	58
TCF23R12G-61	Sound Power	65	65	69	81	86	81	84	86	91
	Sound Pressure @10m	60	58	56	53	56	51	52	53	60
TCF23R14G-61	Sound Power	65	65	69	81	86	81	84	86	91
	Sound Pressure @10m	58	56	55	53	55	50	52	53	60
TCF23R16G-61	Sound Power	65	65	69	81	86	81	84	86	91
	Sound Pressure @10m	56	55	54	52	55	49	51	53	59
TCF23R18G-61	Sound Power	65	65	69	81	86	81	84	86	91
	Sound Pressure @10m	55	54	54	51	54	49	51	53	59
TCF24R18G-63	Sound Power	66	66	71	83	87	82	86	87	92
	Sound Pressure @10m	59	57	56	54	56	51	53	54	61
TCF24R20G-63	Sound Power	66	66	71	83	87	82	86	87	92
	Sound Pressure @10m	58	57	56	53	56	51	53	54	61

(1) dB(A) is the overall sound level, measured on the A scale.
(2) All sound data measured at nominal conditions: Water in/out 16/10°C at 35°C ambient.
(3) Based on unit with a 300mm plenum, for units fitted with optional extras, please contact Airedale.

Technical Data

Sound Data

TCF - EC Fans

		Single Octave Sound Levels (dB) Frequency (Hz)								
		63	125	250	500	1000	2000	4000	8000	Overall [dB(A)]
TCF11X06G-54	Sound Power	84	83	79	79	82	77	80	81	87
	Sound Pressure @10m	51	50	47	47	50	45	47	49	55
TCF11X08G-54	Sound Power	83	82	79	79	82	77	80	81	87
	Sound Pressure @10m	51	50	47	46	49	44	47	49	54
TCF12X08G-56	Sound Power	85	84	81	81	85	80	83	84	90
	Sound Pressure @10m	52	51	48	49	52	47	50	52	57
TCF12X10G-57	Sound Power	86	85	82	82	85	80	83	84	90
	Sound Pressure @10m	53	52	49	49	52	47	50	52	57
TCF12X12G-57	Sound Power	87	86	82	82	85	80	83	84	90
	Sound Pressure @10m	54	53	50	49	52	47	50	52	57
TCF22X10G-59	Sound Power	86	85	82	82	85	80	83	84	90
	Sound Pressure @10m	53	52	49	49	52	47	50	52	57
TCF23X12G-61	Sound Power	87	86	82	83	86	81	84	86	91
	Sound Pressure @10m	54	53	50	50	54	49	52	53	59
TCF23X14G-61	Sound Power	87	86	83	83	87	82	84	86	92
	Sound Pressure @10m	54	54	50	50	54	49	52	53	59
TCF23X16G-61	Sound Power	88	87	84	83	87	82	84	86	92
	Sound Pressure @10m	55	54	51	50	54	49	51	53	59
TCF23X18G-61	Sound Power	88	87	84	84	87	82	84	86	92
	Sound Pressure @10m	55	54	51	51	54	49	51	53	59
TCF24X18G-63	Sound Power	88	87	84	84	88	83	86	87	93
	Sound Pressure @10m	55	54	51	51	55	50	53	54	60
TCF24X20G-63	Sound Power	89	88	85	85	88	83	86	87	93
	Sound Pressure @10m	56	55	51	51	55	50	52	54	60

(1) dB(A) is the overall sound level, measured on the A scale.
(2) All sound data measured at nominal conditions: Water in/out 16/10°C at 35°C ambient.
(3) Based on unit with a 300mm plenum, for units fitted with optional extras, please contact Airedale.

Technical Data

Hydronic Data

Evaporator Pressure Drop - 100% Water

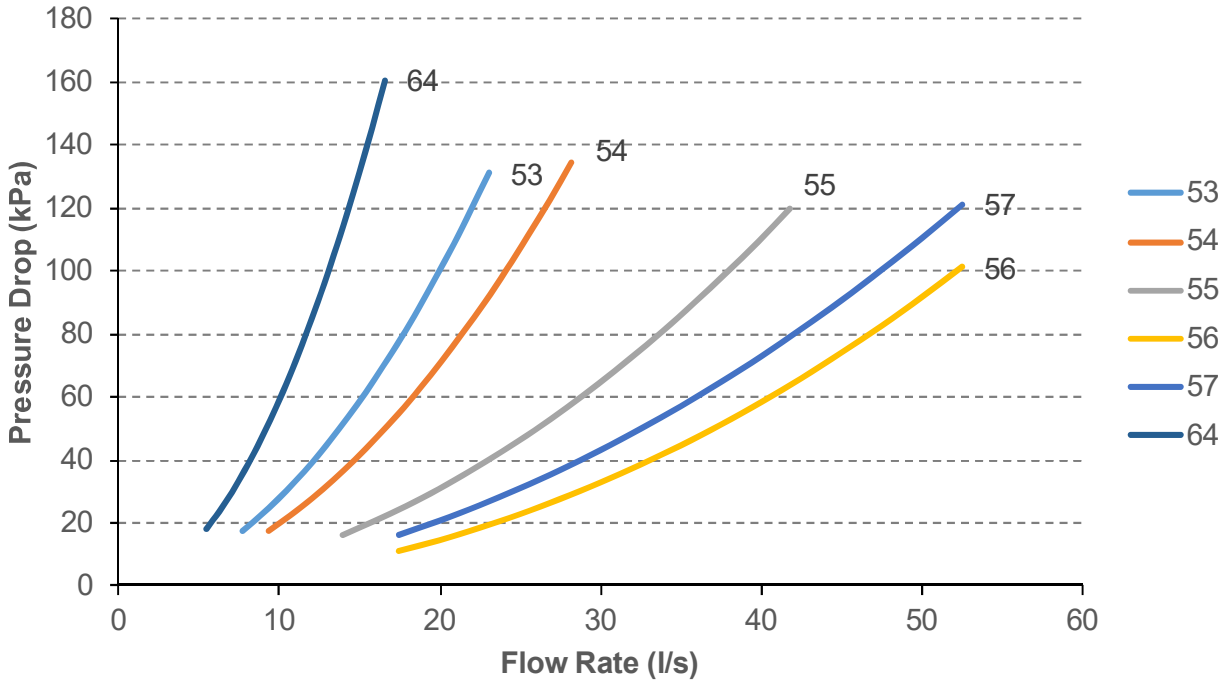

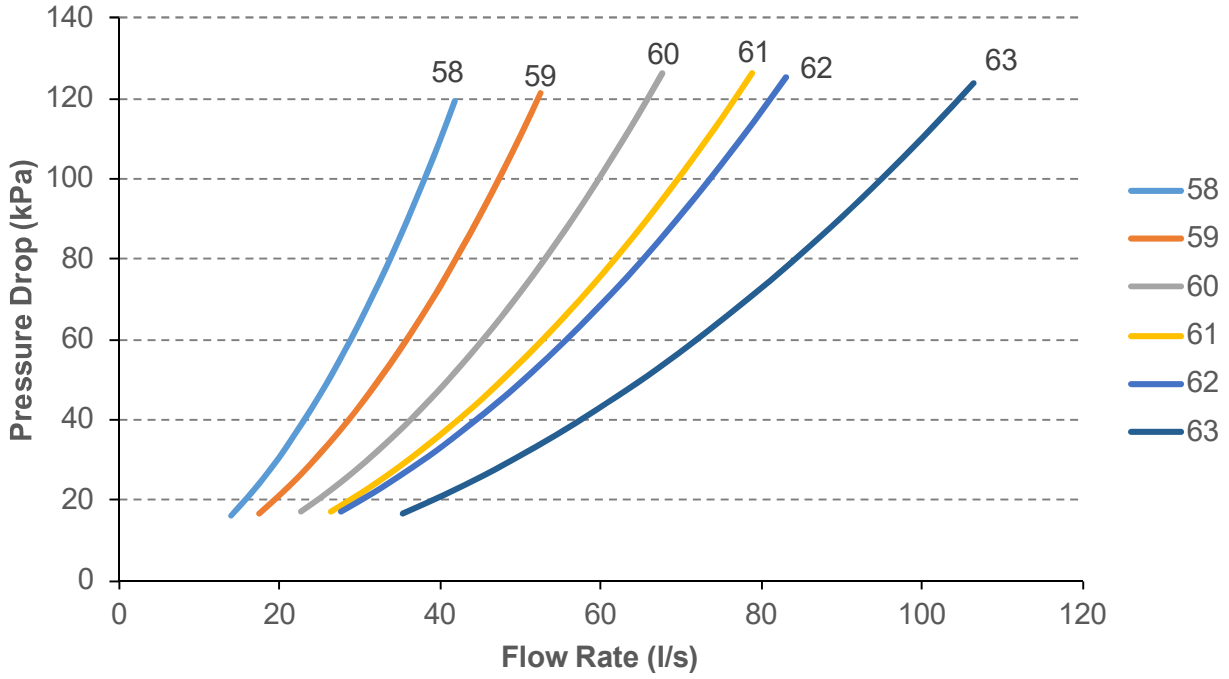

Technical Data

Hydronic Data

Evaporator Pressure Drop - 20% Ethylene Glycol

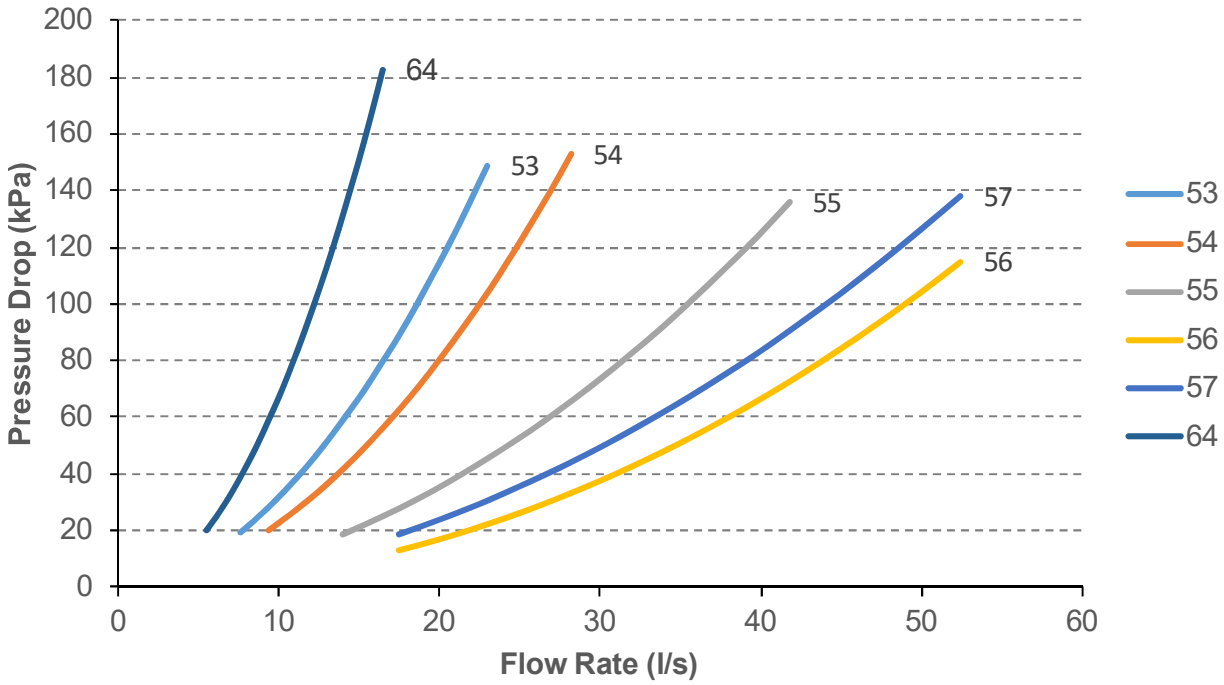

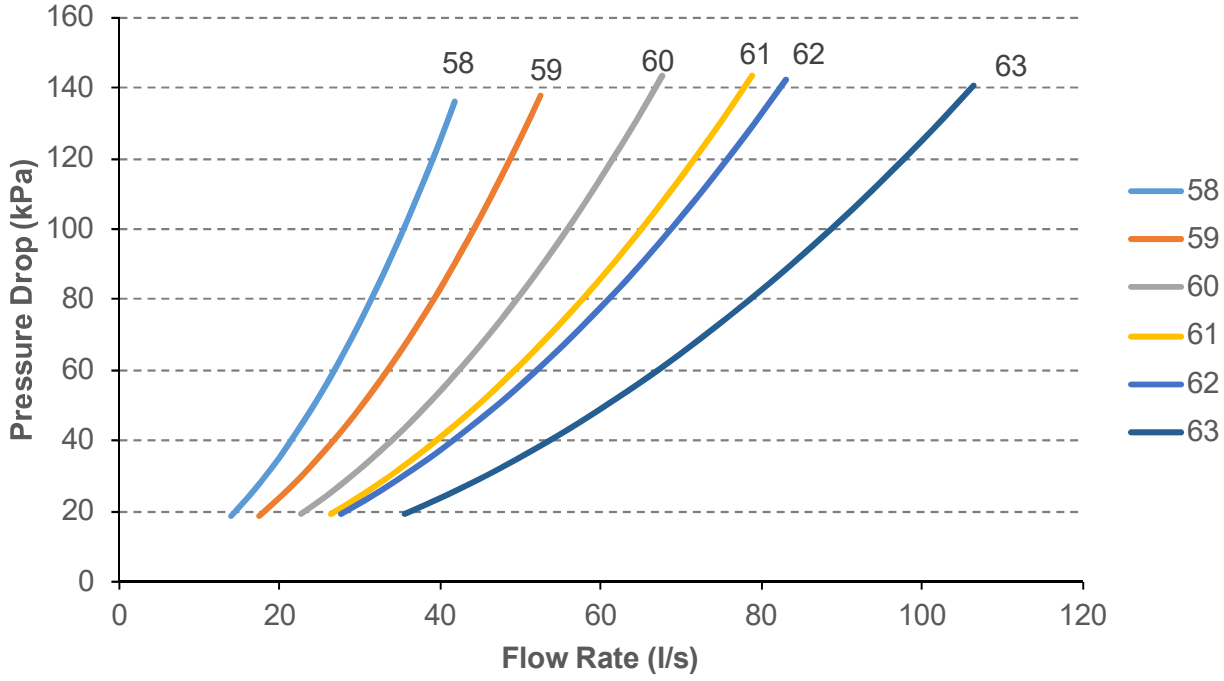

Technical Data

Hydronic Data

Strainer Pressure Drop - 100% Water

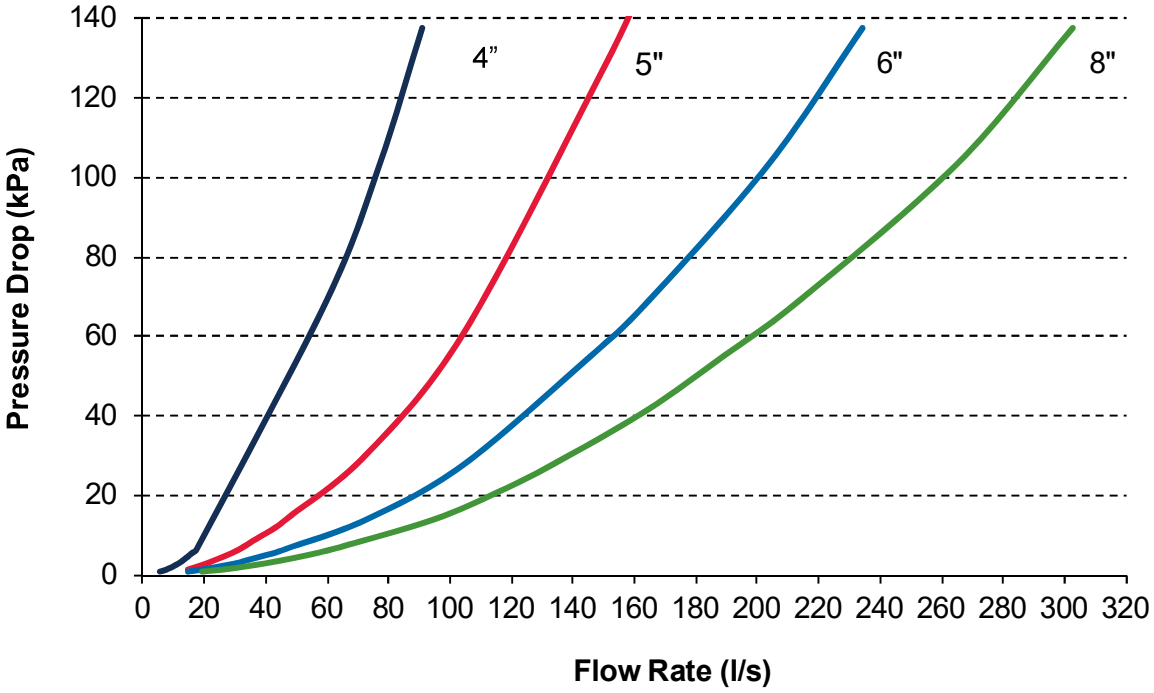

Strainer Pressure Drop - 20% Ethylene Glycol

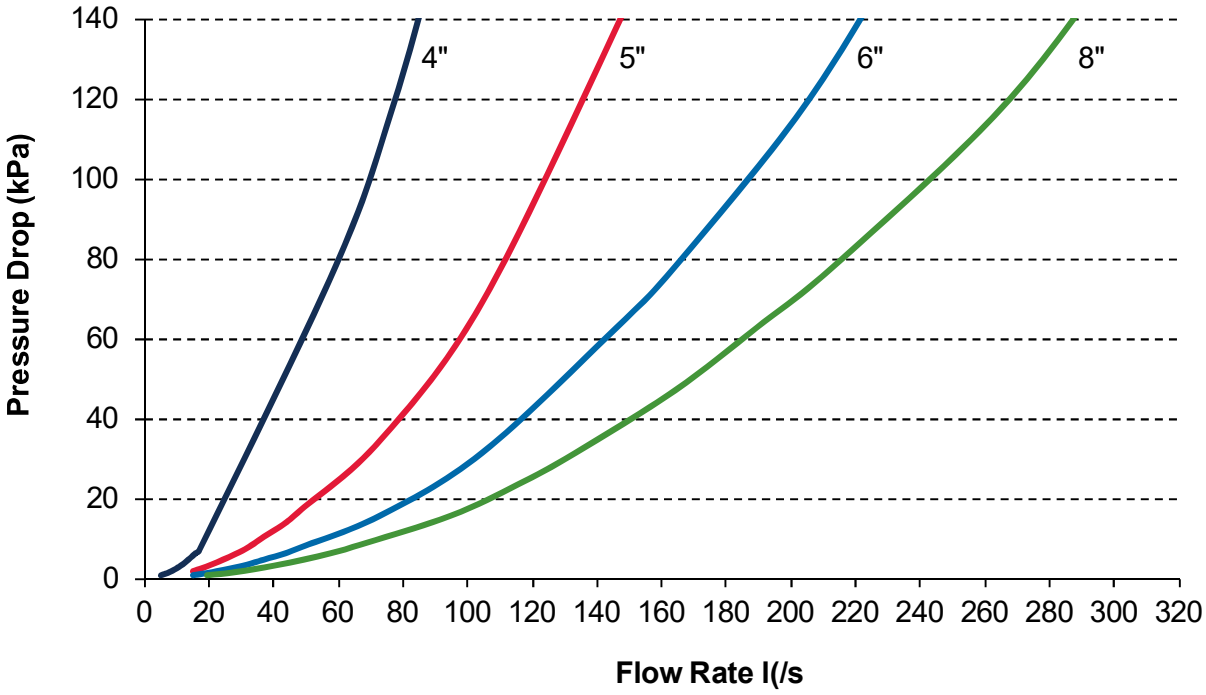

Installation Data

Air Cooled Masses & Centre of Gravity (C of G)

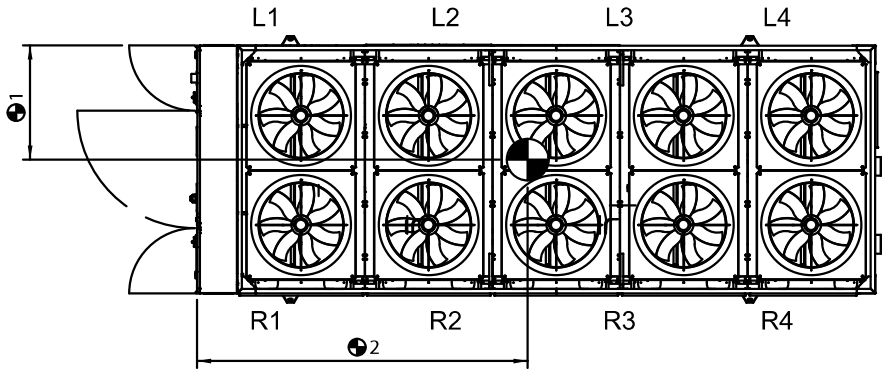

Unit Nomenclature	Machine Weight (kg)	Operating Weight (kg)	CofG 2	CofG 1
TCC11R03Z-64	1580	1674	1810	725
TCC11R04G-53	2745	2845	1350	1150
TCC11R06G-53	3300	3400	1760	1140
TCC11R08G-53	3785	3885	2270	1130
TCC12R08G-55	4730	4870	2360	1160
TCC12R10G-55	5275	5415	2750	1160
TCC22R08G-58	4790	4930	2340	1160
TCC22R10G-58	5430	5570	2710	1150
TCC23R12G-60	6950	7180	3240	1160
TCC23R14G-60	7510	7740	3890	1160
TCC23R16G-60	7930	8160	4240	1160
TCC23R18G-60	8610	8840	4930	1150
TCC24R18G-62	8990	9240	4850	1170
TCC24R20G-62	9930	10180	5540	1160
TCC11X03Z-64	1580	1674	1810	725
TCC11X04G-53	2745	2845	1350	1150
TCC11X06G-53	3300	3400	1760	1140
TCC11X08G-53	3785	3885	2270	1130
TCC12X08G-55	4730	4870	2360	1160
TCC12X10G-55	5275	5415	2750	1160
TCC22X08G-58	4790	4930	2340	1160
TCC22X10G-58	5430	5570	2710	1150
TCC23X12G-60	6950	7180	3240	1160
TCC23X14G-60	7510	7740	3890	1160
TCC23X16G-60	7930	8160	4240	1160
TCC23X18G-60	8610	8840	4930	1150
TCC24X18G-62	8990	9240	4850	1170
TCC24X20G-62	9930	10180	5540	1160

Centre of gravity is always measured from the control panel end.

Above refers to standard configurations of evaporator only, contact Airedale for other options.

Installation Data

Freecool Masses & Centre of Gravity (C of G)

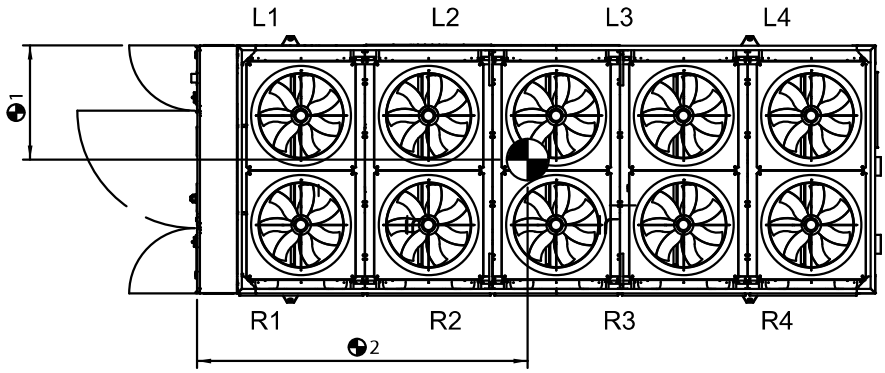

Unit Nomenclature	Machine Weight (kg)	Operating Weight (kg)	CofG 2	CofG 1
TCF11R06G-54	4050	4470	1850	1180
TCF11R08G-54	4835	5345	2350	1110
TCF12R08G-56	5600	6000	2390	1140
TCF12R10G-57	6620	7315	2830	1120
TCF12R12G-57	7520	8335	3240	1120
TCF22R10G-59	6730	7370	2810	1100
TCF23R12G-61	8850	9770	3380	1090
TCF23R14G-61	9760	10780	4040	1080
TCF23R16G-61	10490	11660	4440	1080
TCF23R18G-61	11300	12530	5100	1070
TCF24R18G-63	12650	14100	5050	1080
TCF24R20G-63	13850	15460	5740	1060
TCF11X06G-54	4050	4470	1850	1180
TCF11X08G-54	4835	5345	2350	1110
TCF12X08G-56	5600	6000	2390	1140
TCF12X10G-57	6620	7315	2830	1120
TCF12X12G-57	7520	8335	3240	1120
TCF22X10G-59	6730	7370	2810	1100
TCF23X12G-61	8850	9770	3380	1090
TCF23X14G-61	9760	10780	4040	1080
TCF23X16G-61	10490	11660	4440	1080
TCF23X18G-61	11300	12530	5100	1070
TCF24X18G-63	12650	14100	5050	1080
TCF24X20G-63	13850	15460	5740	1060

Centre of gravity is always measured from the control panel end.

Above refers to standard configurations of no pump, no bypass, contact Airedale for other options.

Installation Data

Point Loadings

Air Cooled

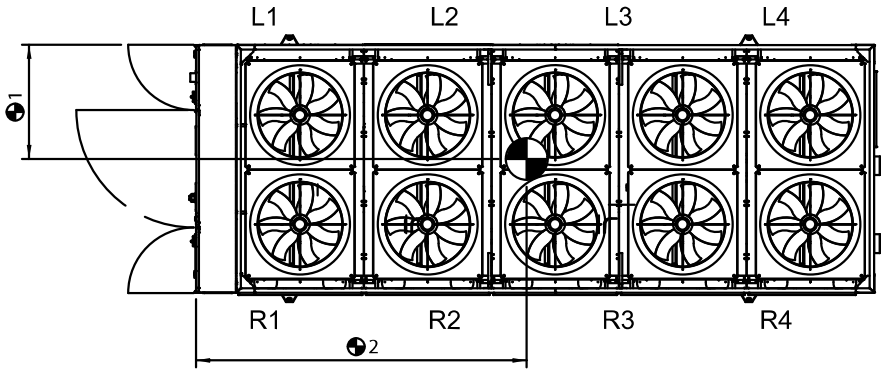

	Standard Unit Point Loads															
	L1 (kg)	L2 (kg)	L3 (kg)	L4 (kg)	L5 (kg)	L6 (kg)	L7 (kg)	L8 (kg)	R1 (kg)	R2 (kg)	R3 (kg)	R4 (kg)	R5 (kg)	R6 (kg)	R7 (kg)	R8 (kg)
TCC11R03Z-64	280	280	280	-	-	-	-	-	280	280	280	-	-	-	-	-
TCC11R04G-53	705	655	-	-	-	-	-	-	755	730	-	-	-	-	-	-
TCC11R06G-53	630	570	435	-	-	-	-	-	675	625	465	-	-	-	-	-
TCC11R08G-53	585	475	430	390	-	-	-	-	620	515	460	410	-	-	-	-
TCC12R08G-55	655	575	565	495	-	-	-	-	720	655	650	555	-	-	-	-
TCC12R10G-55	730	665	610	560	-	-	-	-	800	745	690	615	-	-	-	-
TCC22R08G-58	655	605	575	485	-	-	-	-	710	695	665	535	-	-	-	-
TCC22R10G-58	750	710	635	545	-	-	-	-	820	805	715	585	-	-	-	-
TCC23R12G-60	865	895	870	745	-	-	-	-	960	1020	995	825	-	-	-	-
TCC23R14G-60	815	790	755	680	610	-	-	-	905	900	860	760	660	-	-	-
TCC23R16G-60	875	840	795	720	635	-	-	-	965	940	900	805	685	-	-	-
TCC23R18G-60	770	710	720	720	670	615	-	-	840	795	805	800	735	655	-	-
TCC24R18G-62	810	750	745	725	665	605	-	-	915	880	875	840	760	665	-	-
TCC24R20G-62	870	805	825	810	760	705	-	-	960	925	950	930	865	775	-	-
TCC11X03Z-64	280	280	280	-	-	-	-	-	280	280	280	-	-	-	-	-
TCC11X04G-53	705	655	-	-	-	-	-	-	755	730	-	-	-	-	-	-
TCC11X06G-53	630	570	435	-	-	-	-	-	675	625	465	-	-	-	-	-
TCC11X08G-53	585	475	430	390	-	-	-	-	620	515	460	410	-	-	-	-
TCC12X08G-55	655	575	565	495	-	-	-	-	720	655	650	555	-	-	-	-
TCC12X10G-55	730	665	610	560	-	-	-	-	800	745	690	615	-	-	-	-
TCC22X08G-58	655	605	575	485	-	-	-	-	710	695	665	535	-	-	-	-
TCC22X10G-58	750	710	635	545	-	-	-	-	820	805	715	585	-	-	-	-
TCC23X12G-60	865	895	870	745	-	-	-	-	960	1020	995	825	-	-	-	-
TCC23X14G-60	815	790	755	680	610	-	-	-	905	900	860	760	660	-	-	-
TCC23X16G-60	875	840	795	720	635	-	-	-	965	940	900	805	685	-	-	-
TCC23X18G-60	770	710	720	720	670	615	-	-	840	795	805	800	735	655	-	-
TCC24X18G-62	810	750	745	725	665	605	-	-	915	880	875	840	760	665	-	-
TCC24X20G-62	870	805	825	810	760	705	-	-	960	925	950	930	865	775	-	-

Above refers to standard unit water configurations of evaporator only, contact Airedale for other options.

Installation Data

Point Loadings

Free Cool

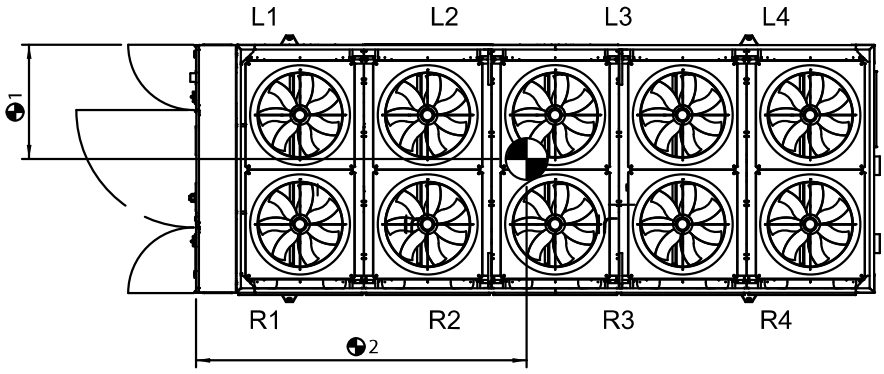

	Standard Unit Point Loads															
	L1 (kg)	L2 (kg)	L3 (kg)	L4 (kg)	L5 (kg)	L6 (kg)	L7 (kg)	L8 (kg)	R1 (kg)	R2 (kg)	R3 (kg)	R4 (kg)	R5 (kg)	R6 (kg)	R7 (kg)	R8 (kg)
TCF11R06G-54	755	720	600	-	-	-	-	-	835	840	720	-	-	-	-	-
TCF11R08G-54	750	670	645	580	-	-	-	-	770	695	655	580	-	-	-	-
TCF12R08G-56	800	730	715	650	-	-	-	-	845	790	780	690	-	-	-	-
TCF12R10G-57	945	915	900	825	-	-	-	-	990	965	930	845	-	-	-	-
TCF12R12G-57	1080	1040	1020	940	-	-	-	-	1135	1100	1060	960	-	-	-	-
TCF22R10G-59	935	970	965	820	-	-	-	-	975	990	930	780	-	-	-	-
TCF23R12G-61	1105	1265	1365	1210	-	-	-	-	1155	1270	1290	1110	-	-	-	-
TCF23R14G-61	1065	1130	1180	1120	985	-	-	-	1100	1130	1130	1035	905	-	-	-
TCF23R16G-61	1170	1215	1280	1235	1060	-	-	-	1190	1205	1210	1125	965	-	-	-
TCF23R18G-61	1025	1030	1100	1165	1105	990	-	-	1045	1020	1055	1080	1010	905	-	-
TCF24R18G-63	1145	1180	1260	1305	1230	1080	-	-	1175	1185	1225	1215	1115	980	-	-
TCF24R20G-63	1230	1270	1395	1475	1395	1230	-	-	1225	1245	1315	1330	1240	1105	-	-
TCF11X06G-54	755	720	600	-	-	-	-	-	835	840	720	-	-	-	-	-
TCF11X08G-54	750	670	645	580	-	-	-	-	770	695	655	580	-	-	-	-
TCF12X08G-56	800	730	715	650	-	-	-	-	845	790	780	690	-	-	-	-
TCF12X10G-57	945	915	900	825	-	-	-	-	990	965	930	845	-	-	-	-
TCF12X12G-57	1080	1040	1020	940	-	-	-	-	1135	1100	1060	960	-	-	-	-
TCF22X10G-59	935	970	965	820	-	-	-	-	975	990	930	780	-	-	-	-
TCF23X12G-61	1105	1265	1365	1210	-	-	-	-	1155	1270	1290	1110	-	-	-	-
TCF23X14G-61	1065	1130	1180	1120	985	-	-	-	1100	1130	1130	1035	905	-	-	-
TCF23X16G-61	1170	1215	1280	1235	1060	-	-	-	1190	1205	1210	1125	965	-	-	-
TCF23X18G-61	1025	1030	1100	1165	1105	990	-	-	1045	1020	1055	1080	1010	905	-	-
TCF24X18G-63	1145	1180	1260	1305	1230	1080	-	-	1175	1185	1225	1215	1115	980	-	-
TCF24X20G-63	1230	1270	1395	1475	1395	1230	-	-	1225	1245	1315	1330	1240	1105	-	-

Above refers to standard unit water configurations of no pump, no bypass, contact Airedale, for other options.

Installation Data

Unit Lifting

- Employ lifting specialists.
- Local codes and regulations relating to the lifting of this type of equipment should be observed.
- Use the lifting eye bolts/lifting lugs provided.
- Attach lifting chains to each of the lifting eye bolts/lifting lugs provided; each chain and eye bolt must be capable of lifting the whole chiller.
- Lifting hole/lug dimension: 40mm.
- Use the appropriate spreader bars/lifting slings with the holes/lugs provided.
- Lift the unit slowly and evenly.
- If the unit is dropped, it should immediately be checked for damage and reported to Airedale.

CAUTION ⚠	The unit should be lifted from the base and where possible, with all packing and protection in position. If any other type of slinging is used, due care should be taken to ensure that the slings do not crush the casework or coil.

Lifting Dimensions

4 Point

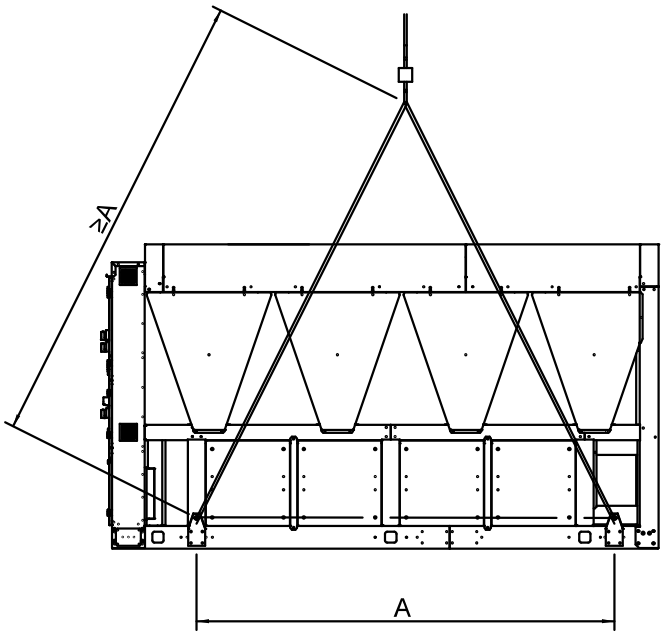

Number of Fans	Lifting Lug Size	A (mm)
4 Fan Unit	35	1533
6 Fan Unit	35	2332
8 Fan Unit	35	3464
10 Fan Unit	35	4077

Installation Data

Lifting Dimensions

8 Point

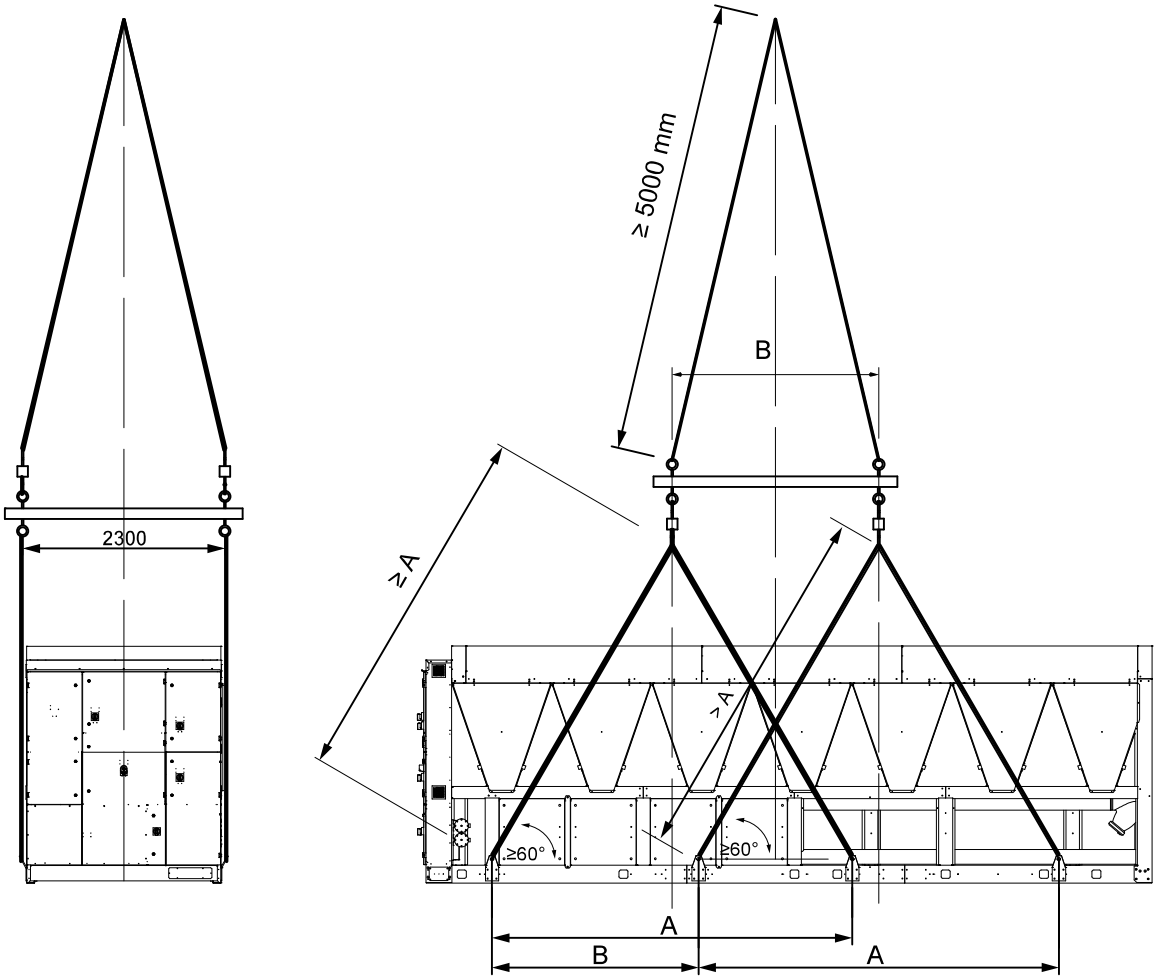

Number of Fans	Lifting Lug Size	Single Circuit Machines		Dual Circuit Machines	
		A (mm)	B (mm)	A (mm)	B (mm)
12 Fan Unit	35	3600	1536	3600	1490
14 Fan Unit	35	4500	1536	4500	1536
16 Fan Unit	35	4300	3100	4300	3100
18 Fan Unit	35	5500	2800	5200	2968
20 Fan unit	35	6500	3164	6500	3139

Installation Data

Dimensions

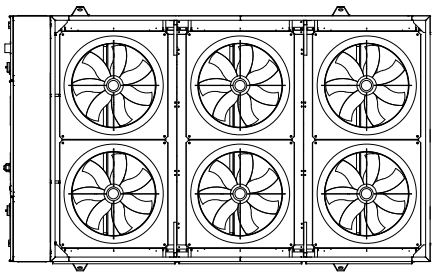

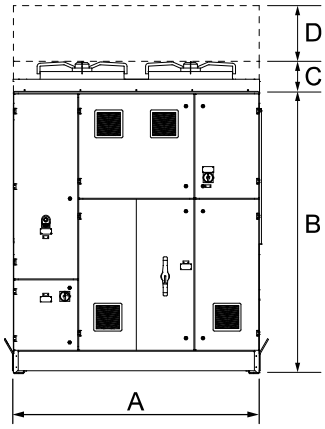

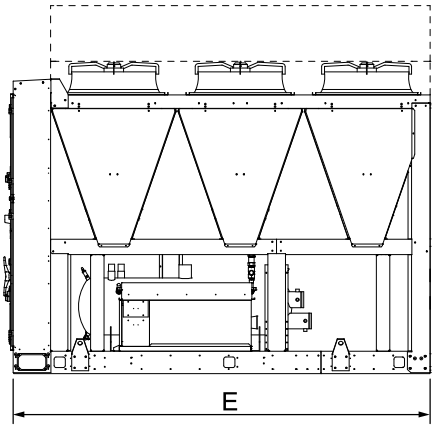

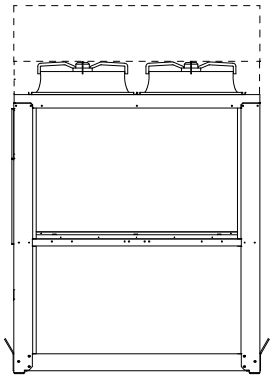

Contact Airedale for detailed general arrangement drawings.

Number of Fans		A	B	C	D	E
4 Fan	mm	2200	2800	300	500	2626
6 Fan	mm	2200	2800	300	500	3758
8 Fan	mm	2200	2800	300	500	4890
10 Fan	mm	2200	2800	300	500	6022
12 Fan	mm	2200	2800	300	500	7154
14 Fan	mm	2200	2800	300	500	8286
16 Fan	mm	2200	2800	300	500	9418
18 Fan	mm	2200	2800	300	500	10550
20 Fan	mm	2200	2800	300	500	11682

Installation Data

Positioning

The installation position should be selected with the following points in mind:

- Position on a stable and even base, levelled to ensure that the compressor operates correctly.
- Levelling should be to +/- 1°.
- Where vibration transmission to the building structure is possible, fit spring anti-vibration mounts and flexible water connections.
- Observe airflow and maintenance clearances.
- Pipe work and electrical connections are readily accessible.
- Where multiple units are installed, due care should be taken to avoid the discharge air from each unit adversely affecting other units in the vicinity.
- Within a side enclosed installation, the fan MUST be higher than the enclosing structure.
- Increase airflow and maintenance clearances for side-enclosed or multiple unit applications.
- Ensure there are no obstructions directly above the fans.
- Allow free space above the fans to prevent air recirculation.

CAUTION ⚠	The chiller must not be located near any fresh air vents to buildings to ensure that in the event of a refrigerant leak no risk exists. Care must also be taken near drains. The pressure relief valve discharge must be away from high voltage equipment.

Airflow & Maintenance Clearances

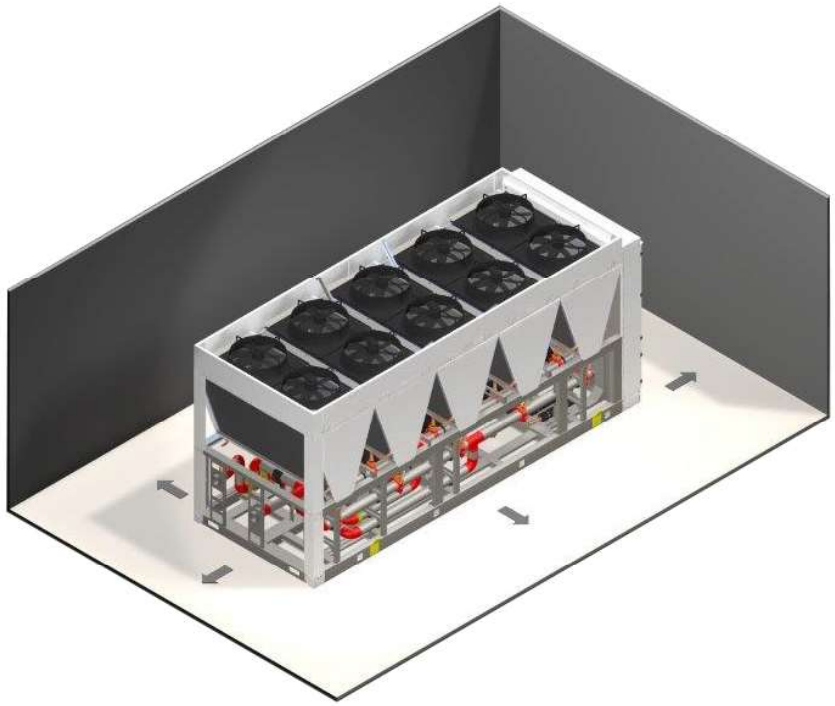

Application	Distance from Overall Base Dimension
Single unit	1300mm
Side-enclosed or multiple units	2600mm

Installation Data

Anti Vibration Mounting (Optional)

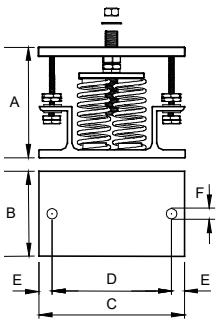

Spring Type

Each mount is coloured to indicate the different loads, refer to instructions supplied for correct allocation.

Dimensions

	A(1)	B	C	D	E	F
TCC / TCF Units	162	130	225	186	20	16

(1) Unloaded dimension

Components

1 Locating screw.
2 Retaining nut & washer.
3 Levelling screw.
4 Levelling lock nut.
5 Retaining studs.
6a Upper retaining nuts.
6b Lower retaining nuts.
7 Spring assembly.
8 Pressure plate.
9 Top plate.
10 Fixing holes.

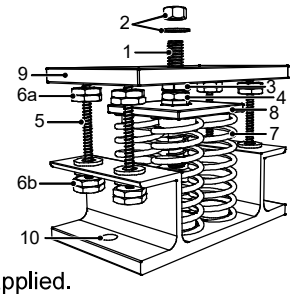

Installation

1. Locate and secure mount using fixing down holes (10) in base plate.
2. Ensure mounts are located in line with the unit base.
3. If applicable, remove compressor enclosure covers to allow access to mount fixing holes in the unit base.
4. Lock the upper retaining nuts (6a) to the underside of the top plate (9) before a load is applied.
5. Slacken levelling lock nut (4). (the levelling screw will not move if this is not slackened).
6. Remove retaining nut and washer (2), lower the unit onto the mounts and replace retaining nut and washer.
7. Beginning with the mount with the largest deflection adjust the height of each mount using the levelling screw (3). Mountings must be adjusted incrementally in turn.
8. Do not fully adjust 1 mount at a time as this may overload and damage springs.
9. When all mounts are level, lock each into place using the levelling lock nut (4).
10. Lock all retaining nuts (6a and 6b) to the extreme ends of the retaining studs (5).

CAUTION ⚠	Do not connect any services until all anti vibration mounts have been fully adjusted.

Pad Type

Components/Installation

1. M16 bolt (not supplied).
2. Washer (not supplied).
3. Fixing pad 6173231.
4. AV pad 6173223.
5. 2 x M16 nut (not supplied).
6. Unit base.
7. Unit mounting plinth.

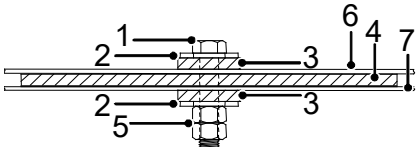

Installation (steel plinth)

1. Locate the pad type anti vibration mount between the unit base and the unit steel mounting plinth.
2. Locate the M16 bolt through the hole in the unit, AV mount pad and steel mounting plinth.
3. Tighten the M16 nut to the underside of the steel mounting plinth.
4. Tighten the second M16 nut (locking nut) to the underside of the steel mounting plinth.

Installation (concrete plinth)

1. Locate the pad type anti vibration mount between the unit base and the unit concrete mounting plinth.
2. Locate the concrete fixing anchor through the AV mount pad and the hole in the unit.
3. Tighten the anchor bolt.

Anti Vibration Mount location to Unit and Plinth

The Anti Vibration mount is larger than the unit base. Consideration must be made with regard to steelwork / concrete plinth sizes. Full information is available on the approved General Arrangement drawings. The base of the unit is open. Considerations must be made for service and maintenance requirements if the unit is installed on a gantry.

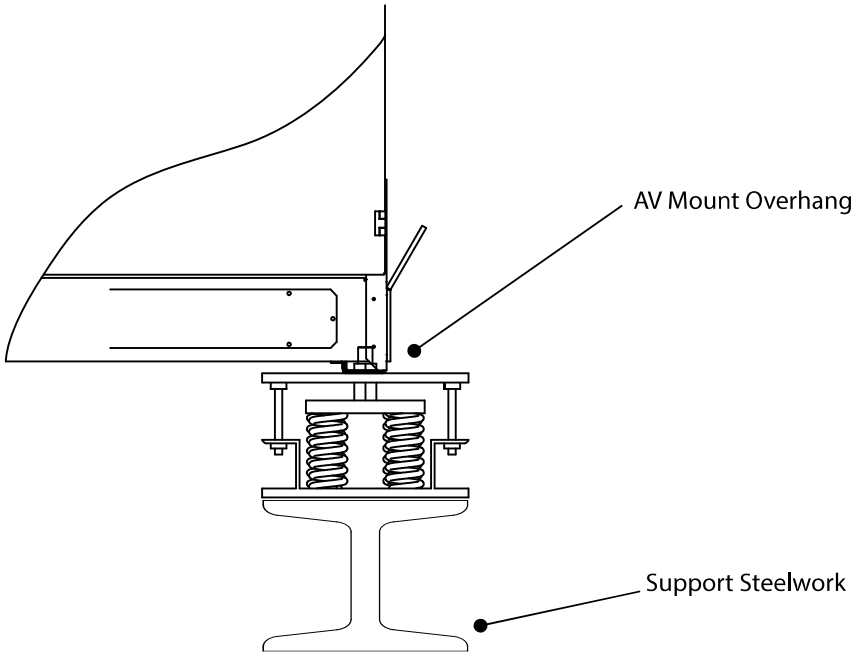

Installation Data

Interconnecting Wiring

General

As standard the equipment is designed for 400V, 3 phase, 3 wire 50Hz and a separate permanent 230V, 1 phase, 50Hz supply, to all relevant IEE regulations, British standards and IEC requirements.

The control voltage to the interlocks is 24V, always size the low voltage interlock and protection cabling for a maximum voltage drop of 2V. Avoid large voltage drops on cable runs, particularly low voltage wiring. A fused and isolated electrical supply of the appropriate phase, frequency and voltage should be installed. Wires should be capable of carrying the maximum load current under non-fault conditions at the stipulated voltage.

CAUTION ⚠	A separately fused permanent single phase and neutral supply must be fitted for the evaporator trace heating and control circuits and for the leak detection and ventilation systems to work in the event of a leak being detected. Failure to do so will invallidate warranty. ALL work must be carried out by technically trained competent personnel. Isolate remotely the mains incoming supply to the busbar chamber prior to maintenance or repair work.

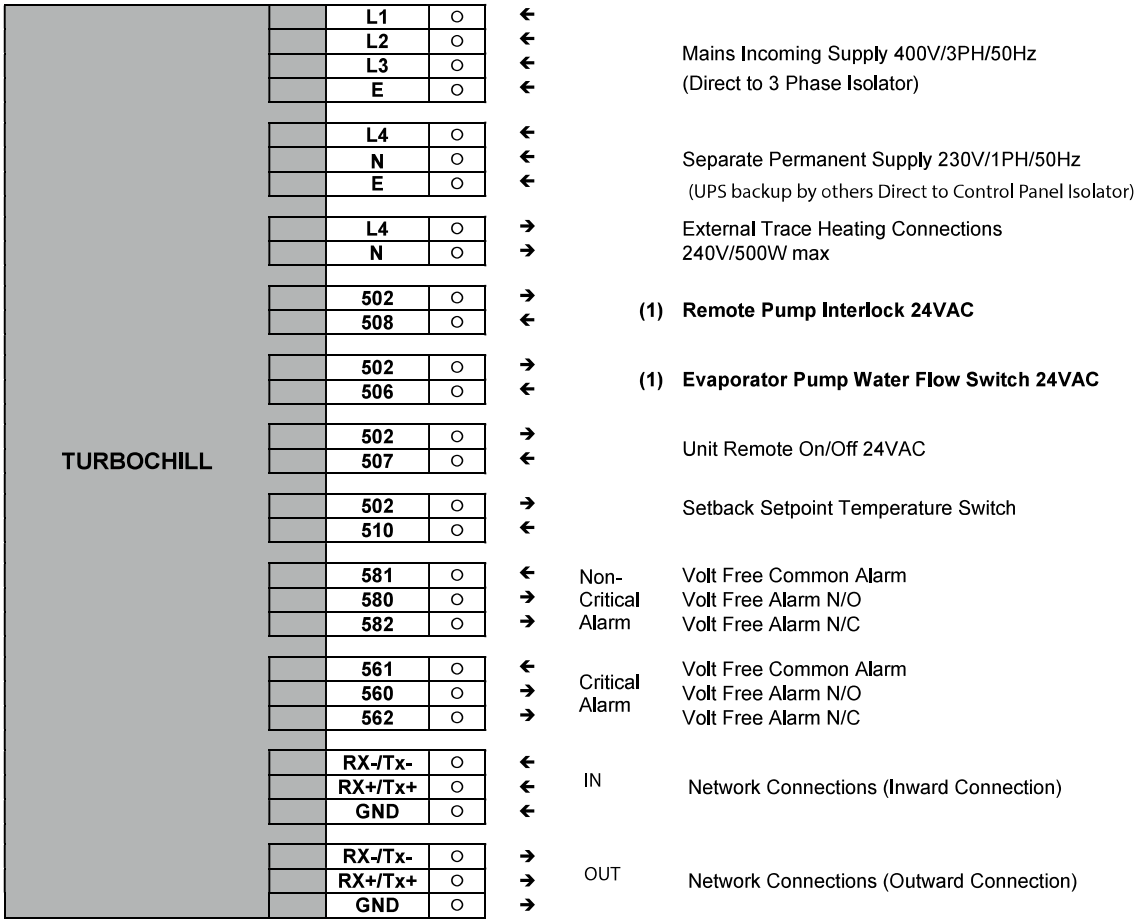

IMPORTANT ⚠	(1) Must be directly wired to the chiller to validate warranty.

IMPORTANT ⚠	This system has been designed to be connected to a TN type distribution system. For alternate distribution type systems, contact Airedale.

pLAN termination

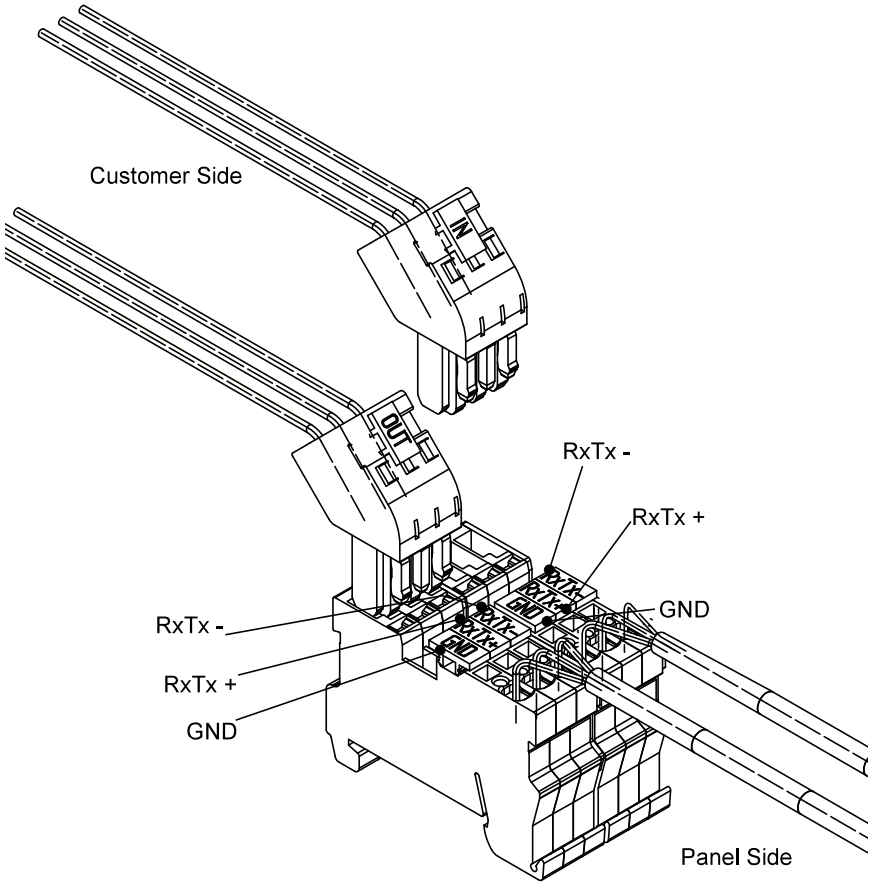

CAUTION ⚠	The plugged termination ensures that the connections are made simultaniously. Failure to attached the cables this way may cause damage to the controller.

Power Quality & Harmonics

Variable speed drives are now common place due to their efficiency and versatility. Not ignoring these facts, care must be taken when installing VSD technology into new and existing installations. This is due to the effect the introduction of such technology may have on line harmonics of a buildings electrical system. VSDs by their nature cause distortion of the AC line by drawing current in pulses, rather than continuously from the supply resulting in harmonic generation. The useful power to a motor is that obtained from the fundamental frequency of 50Hz. The additional currents at the higher frequencies are not useful to the appliance and are therefore transmitted back onto the line.
Examples of other non-linear loads that cause harmonics are:-

Single phase loads

- Switched mode power supplies.
- Personal computers.
- HF fluorescent ballasts.
- Compact fluorescent lamps.

Three phase loads

- Variable frequency drives.
- Inverters.
- Large UPS systems.

The distortion of the line caused by harmonics can cause the following associated issues:-

- Erroneous operation of control systems.
- Nuisance tripping of circuit breakers.
- Overloading of transformers.
- Overloading of capacitors.
- Overvoltage problems.
- Excessive currents in neutral conductor.

The 3rd, 5th, 7th and 9th harmonics are considered to be the predominant frequencies produced by non-linear loads. To minimize the harmonic effect, each Turbocor compressor is fitted with a 5% line reactor to help reduce the harmonics and improve the displacement power factor above 0.95(1). However, to further reduce the effects and to help meet limits for engineering recommendation (ER) G5/4, the following guidelines can be followed.

Current Harmonics

Harmonic currents contribute to system losses. Mitigation measures can be implemented in the following ways:

- Install passive/active harmonic filters.
- Install the unit as far from the source transformer as possible.

Voltage Harmonics

Harmonic voltage distortion causes disturbance to other loads and increases losses in them. Methods for harmonic voltage reduction can be achieved in the following ways:

- Increase the size of the supply transformer.
- Connect the unit to a point with a high fault level (low impedance).
- Keep the unit as far from the point of common coupling (PCC) as possible.

Engineering Recommendation G5/4

It is important to understand that G5/4 is effectively an “Installation Standard” and applies to the total harmonic generating equipment installed by a consumer. G5/4 identifies consumers by their PCC to the supply and applies limits at that point. G5/4 is not a product or equipment standard and therefore no single item of equipment can be said to comply.

Note: (1) Based at full load conditions.

Pre Start Checks

CAUTION ⚠	ALL work MUST be carried out by technically trained competent personnel. The equipment contains live electrical and moving parts, ISOLATE prior to maintenance or repair work.

Water Flow

Make sure that you have the correct water flow rate before turning the unit on. (Refer to commissioning documentation).

CAUTION ⚠	If the unit is operated without water the unit will be damaged.

Shut Off Valves

All shut off valves must be opened prior to starting unit.

Electrical Power Supply

The power supply to the unit must be correct to design. The three phase power must be of correct phase orientation. A permanent single phase supply (L4) provides power to the microprocessor and evaporator trace heater. This must be supported by a UPS.

CAUTION ⚠	The L4 permanent supply also provides power to the leak detector and compressor ventilation fans.Check phase rotation of electrical supply prior to running the compressor as it's direction sensitive.

Visual Inspection

Check that the unit is of satisfactory condition and that it has not been damaged. A damaged component could indicate a reason why the unit is not operating. For example: A refrigerant leak etc.

Electrical Overloads

Check that circuit breakers are all turned on. If not investigate why they have tripped. This could be the reason why the unit has turned off.

pCO5+ Built In Display and Keypad

The in-built display is equipped with LCD display (8 rows x 22 columns) with 6 buttons.

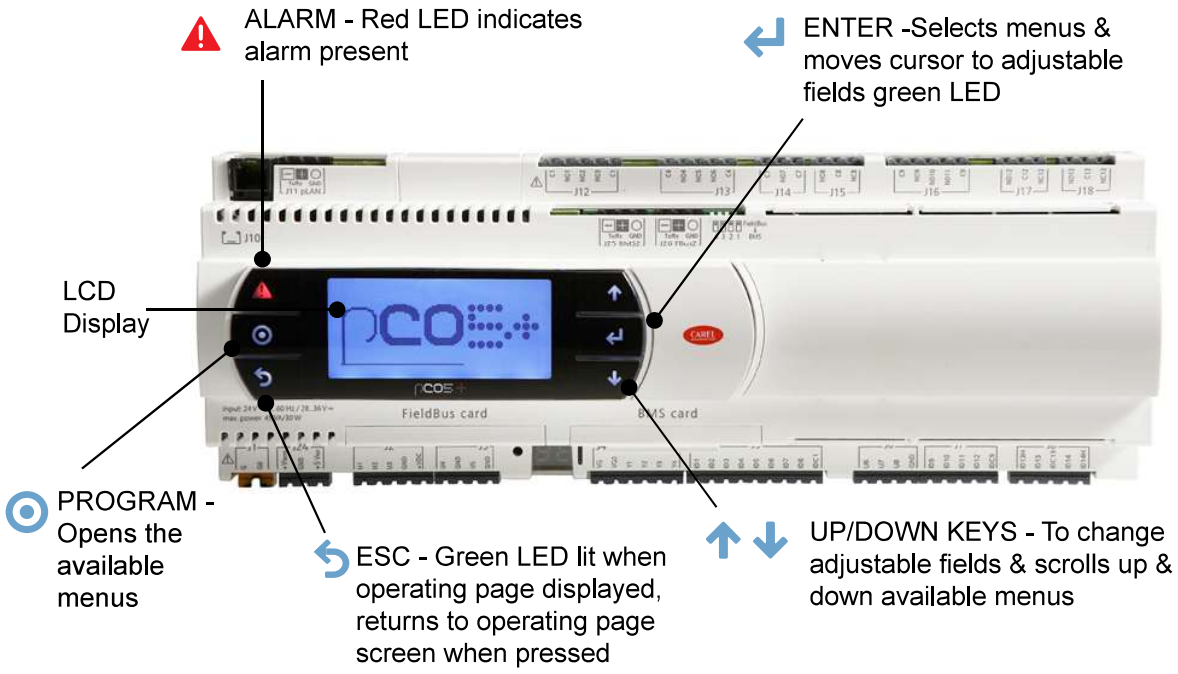

Display/Keypad

1		UP/DOWN KEYS - to change adjustable fields & scrolls up & down available menus.
2		ENTER - selects menus & moves cursor to adjustable fields blue LED.
3		ESC - green LED lit when operating page displayed, returns to operating page screen when pressed.
4		PROGRAM - opens the available menus.
5		ALARM - red LED indicates alarm present.
6		8 ROW LCD DISPLAY.
7		CURSOR (FLASHING) Top left position = “HOME” indicates adjustable fields.

Monitoring

The microprocessor also monitors and displays the following measured parameters:

- Supply water temperature (°C).
- Return water temperature (°C).
- Suction pressure of each circuit (Barg).
- Liquid pressure of each circuit (Barg).
- Suction temperature at each circuit (°C).
- Subcool for each circuit (K).

Unit Operation

The unit must not be started unless the pre start checks have been carried out.

Restarting the Unit

To turn the unit on press the key to enter the program menu.

Using the or keys select the Unit On/Off option and press :

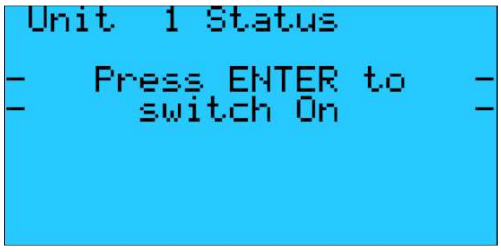

When is pressed the above screen will be shown.

To turn the unit on simply press the key again and the screen will change:

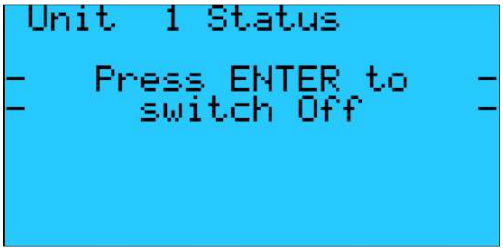

CAUTION ⚠	The chiller will be going through its start-up sequence. Pressing will turn the unit off.

Once the screen has changed to the above press the key which will return back to the main screen.

Changing the Setpoint

To change the set point of the unit from the main screen press the button.

Use the and to scroll to the set point option as shown below and press

The following screen will be shown:

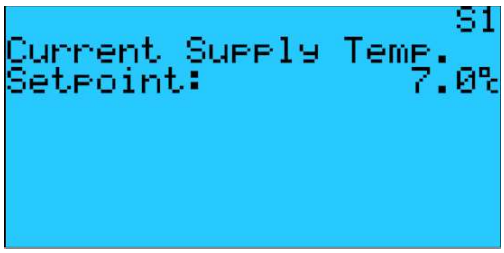

Using the or button scroll to the password screen.

Enter the password 4648 using the and keys and press after each number is entered. (The numbers start at 5555. So down one to 4, up one to 6 etc).

When the final number is entered the screen will jump to the set point adjustment screen:

To adjust the set point press the key to highlight the set point, using the and keys enter the required set point and press the key until the cursor returns to the top of the screen.

Enabling Pumps

Pump Start-Up

Use the start-up guide for the general setting of the pump controller including the setting of the correct direction of rotation. The start-up guide will be initiated automatically the first time when its connected to a supply voltage. It can be restarted in the menu under GENERAL. Please note that in this case all previous settings will be erased.

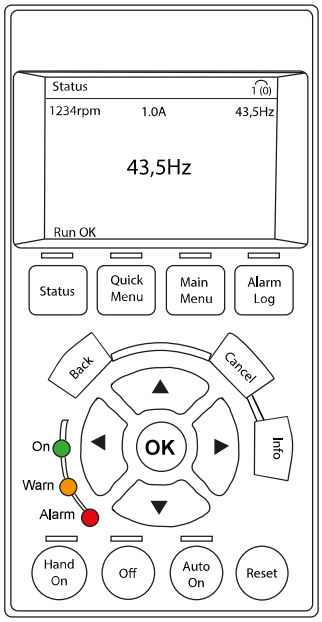

Editing Buttons

OK	Select parameter marked by cursor and enables the change of parameters.
Hand On	Enables control of drive via the GLCP. Start the motor and allows speed setting using arrow keys.
Off	Stops the motor.
Auto On	Enables drive control via controls input(s).
Reset	Resets the drive after an alarm (trip).

Indicator Lights

	On (green) ● The pump is running or has stopped by a stop function. ● If flashing, the pump has been stopped by the user (CUE menu), external start/stop or bus.
	Warn (orange) The pump has been stopped with the on/off button.
	Alarm (red) Indicates an alarm or a warning.

Navigation Buttons

◀ ▶	Navigates from one menu to another. When the menu is changed, the display shown will always be the top display of the new menu.
▲ ▼	Navigates up and down in the individual menu.
Back	Reverts to the previous step or layer in the navigation structure.
Cancel	Last change or command will be cancelled as long as the display has not been changed.
Info	Displays info about a command, parameter of function.
Status	Indicates the status of the drive and / or motor.
Quick Menu	Allows quick setup of the drive, most common parameters and functions can be accessed here.
Main Menu	Used to access all parameters for programming.
Alarm Log	Displays a list of the 10 latest alarms, Extra info can be obtained by selecting the alarms.

Running the pump alone for low ambient flow protection or during commissioning.

To run the pumps alone without operating the compressors, the following procedure is carried out:

1. Set the remote unit ON / OFF to the OFF position (open circuit).
2. Remote pump ON / OFF to ON position (closed circuit).
3. Turn the unit ON by display through the microprocessor.

The pumps on the chiller will start. Cooling will not be enabled until the remote unit ON / OFF is to the ON position. This method is used to ensure that there is water flow through the chiller during periods of unit shut down. To reinstate cooling the unit remote ON / OFF is to be Closed.

Operational Maintenance Checks

Owners Responsibility

To ensure that the chiller can be maintained correctly ensure the following requirements are met.
Maintain a safe working environment around the chiller, free from obstructions and debris.
The unit shall follow the maintenance schedule below as a minimum.

CAUTION ⚠	The equipment contains live electrical and moving parts, ISOLATE prior to maintenance or repair work. Ensure lock off procedures are carried out accordingly. If inverter driven pumps are used ensured at least 5 minutes is allowed for them to discharge any electrical charge.

Maintenance

General Inspections

	Task	Frequency		
		3 Mths	12 Mths	60 Mths
General Inspections	Check for visible mechanical damage to unit.	●		
	Visually inspect the unit for general wear and tear, treat metalwork.	●		
	Rust should be inhibited, primed and touched up with matching paint.			
	Check for excess vibration from other rotating equipment.	●		
	Clean Microchannel condenser coil	●		
	Ensure no debris has collected under compressor housing(if fitted)	●		

Service Tools/ Test Equipment
- Touch-up paint
- Stiff brush

Safety Equipment
- Safety glasses/goggles

Procedures

Coil Cleaning

To clean micro channel condenser coils use detergent and a stiff bristled brush. For heavy dirt, use either a low pressure water with a broad spray pattern or a non acidic cleaner (Ph ≥7 <10.5). Do not steam clean.

Debris under compressor housing

Debris under the compressor housing can cause the refrigeration ventilation fan to underperform.

Maintenance

Electrical Inspection

	Task	Frequency		
		3 Mths	12 Mths	60 Mths
Electrical Inspection	Check mains power supply voltages		●	
	Check electrical terminals are tight.		●	
	Check for signs of hot spots/ discolouration on power cables.		●	
	Check amperages are as per design.	●		

Service Tools/Test Equipment
- Voltmeter
- Screwdrivers/Allen keys
- Ammeter

Safety Equipment
- Safety glasses/goggles

Procedures

Electrical Connections
Ensure all electrical connections are tight and correctly terminated.

Electrical Earthing
Check that the unit is correctly earthed.

Voltage
Measure the voltage at the following points and record on the maintenance sheet:
- Voltage at Isolator.
- Voltage at permanent supply.
- Control voltage at transformer (min 22.5V, max 25V).

The voltage measurements should be carried out with the unit MCB's turned off.

EC Fan Interrogation
The EC fans can be interrogated by connecting a hardware interface kit from the fan to a PC. The kit comprises of a USB to RS232 9-pin "D-type" adapter. This should be installed on the PC with the software supplied with the kit.
The "COM" port of the USB to RS232 adapter should be assigned to a free COM port between COM 1 and 4 via the system device manager. Connect the RS232 to RS485 interface converter to the USB port of your PC via the USB to RS232 serial interface lead and connect the RS485 output to the fan.
- Tx += RS A
- Tx - = RS B

(Except high airflow fans. Interogation is via a separate module available from Airedale).

Maintenance

Refrigeration

	Task	Frequency		
		3 Mths	12 Mths	60 Mths
Refrigeration	Compare the following and compare results with commissioning records:			
	Suction, liquid and discharge pressures.	●		
	Refrigeration system temperatures, suction, liquid and discharge. Record superheat and sub cooling temperatures.	●		
	Check each circuit sight glass for dryness and bubbles for indication of leaks.	●		
	Inspect the leak detector in accordance to EN378.		●	
	Head pressure control is maintained.	●		
	Check and record filter drier pressure drop.	●		
	Record details on F-Gas record.	●		
	Pressure relief valves. (replace in accordance to building insurance)			●
	Inspect Pressure relief rupture discs			●

Service Tools / Test Equipment
- Refrigerant Manifold Gauges
- Spanners
- Voltmeter

Safety Equipment
- Safety glasses /goggles
- Gloves
- Overalls

Procedures

HP/LP Safety Pressure Switch Settings

Check operation of HP/LP cut-out.

Settings

LP cut-out – (Auto reset for 3 times when the Low Pressure is detected over a period of 1 hour).
Has a 2 minute delay on start-up (similar to a Low ambient kit).
Low pressure cut-out 1.0 +/- 0.3 Barg.
HP switch (Auto reset): High pressure switch 12.5 Barg +/- 0.5 Barg.
HP limiting function 10.7 Barg / 1.5 Barg differential.

Maintenance

Waterside

	Task	Frequency		
		3 Mths	12 Mths	60 Mths
Waterside	Check pressure drop of water strainer against graphs. If excessive clean the strainer.		●	
	Visually inspect pipe and pipework insulation. Ensure pipework clamps are secure.		●	
	Inspect for water leakage.	●		
	Check pressure drop of evaporator against graphs. Clean evaporator if excessive.	●		
	Check condition of Water / Glycol solution to ensure that the system is protected against corrosion, scale and microbiological fouling, ensuring maximum heat transfer efficiency.	●		

Service Tools/Test Equipment
- Spanners
- Manometer
- Thermometer
- Refractometer

Safety Equipment
- Safety glasses/goggles
- Gloves
- Overalls

Procedures

Water Strainer
A water strainer must be fitted to the inlet side of the chiller evaporator. Failure to do so may result in severe damage and will void the AIREDALE warranty.

Water Flow Rate
Check that the design water flow rate is available to the unit. If not available do not turn unit on.

Waterside Pressure Drop
Measure the waterside pressure drop of the unit ensuring that the pump (if fitted) is operating.

Glycol Strength
Check and record the glycol type and strength. Low levels of glycol can cause freeze up problems when operating at low temperatures or during the unit off state during cold ambient conditions. Glycol concentration is measured by use of a refractometer.

Differential Pressure Sensor
Ensure that the differential pressure sensor operates satisfactorily; the best way to do this is to carefully reduce the flow to the chiller to simulate a flow fail. The compressor cannot operate without the correct water flow rate and will invalidate warranty. Disable compressor operation whilst simulating a low flow.

Procedure
- From pressure curves determine the design flow rate / pressure drop.
- Make sure that any effects of glycol in the system are taken into account (flow rate and pressure drop).
- Input into the controller the reduced pressure drop (kPa) value (normally 80% of design flow rate).
- Once this value is programmed into the controller the water flow rate can be carefully reduced to verify that the low flow alarm is activated.

Ensure that the tubes connected to the sensor are insulated. Ensure correct flow rate is available to the chiller before compressors are reinstated.

Flow Switch
A “paddle” type flow switch is fitted, wired to the chiller control panel and tested. This should be fitted on the outlet of the evaporator and before isolation valves.

Pump Interlock
Check that the pump interlock is fitted and functioning correctly.

Maintenance

Controls

	Task	Frequency		
		3 Mths	12 Mths	60 Mths
Controls	Change controller battery.		●	

The controller will keep the strategy for a short period of time with no battery.

Service Tools/Test Equipment
- Small terminal screwdriver

Safety Equipment
- Electrostatic wristband

Procedures

The following controller settings are to be recorded on the maintenance sheet:
- Head pressure differential (bar)
- Minimum suction pressure (bar)
- Supply water set point (Summer / Day) (°C)
- Supply water set point (Winter / Night) (°C)
- Minimum supply water temperature (°C)

Maintenance

System

	Task	Frequency		
		3 Mths	12 Mths	60 Mths
System	Check the following against the commissioning records:			
	Record operating conditions.	●		
	Water on / off temperatures.	●		
	Water pressure drop.	●		

Unit Operation Checks

Record the following operating conditions of the unit at stable conditions:

- Suction pressure (Bar).
- Liquid pressure (Bar).
- Discharge pressure (Bar).
- Suction temperature (°C).
- Liquid temperature (°C).
- Discharge temperature (°C).
- Superheat (K).
- Sub cooling (K).
- Water return temperature (°C).
- Water supply temperature (°C).

Low supply water trip

To check operation of the low temperature trip the following procedure can be carried out.

- With the unit running increase the low temperature limit to the actual supply water temperature.
- This will trip the unit in a safe manner without risk of freezing the evaporator.
- Return the low temperature limit to correct value after test (this will allow the unit to operate correctly).

Liquid line sight glass

Record the status of the liquid line sight glass:

- Clear/flashing.
- Wet/dry.

The sight glass is used to indicate:

- The condition of the refrigerant in the system.
- Lack of refrigerant.
- Moisture content of the refrigerant.

The colour of the sight glass depends on the moisture content of the refrigerant. The recommended moisture levels of a system should be below 75ppm. An indication of green/dry are to be considered as perfect conditions meaning full protection by the filter drier against effects from moisture. If the green colour starts to fade, the colour change from green to yellow has begun and the indicator should therefore be watched carefully. If the colour changes to yellow it is a clear signal that the capacity of the filter drier is exceeded and should be replaced as soon as possible.

F-Gas Leak detection checks

Perform an F-Gas refrigerant leak detection on the unit and ensure no refrigerant leaks are found. Checks must also be carried out on the operation of the refrigerant leak detector in accordance to manufacturers instructions.

Appendix - Ecodesign

The following tables of Ecodesign data is based on the following common information:

SEPR (Seasonal Energy Performance Ratio)

- Type of Condensing - Air Cooled Standard EC Fans
- Refrigerant Fluid - R1234ze(E).
- Operating Temperature - 7°C.
- Operating Control - Variable.
- Outdoor Side Heat Exchanger - Air.
- Indoor Heat Exchanger - Water.
- Type Driven - Vapour Compression.
- Driver of Compressor - Electric Motor.
- Degradation coefficient - 0.9.

Part load conditions for SEPR calculation for air cooled high temperature process chillers.

Rating Point	Part load ratio (%)	Outdoor side heat exchanger	Indoor side heat exchanger
		Inlet air temperature (°C)	Evaporator inlet/ outlet water temperatures (°C)
			Fixed outlet
A	100	35	12/7
B	93	25	(*)/7
C	87	15	(*)/7
D	80	5	(*)/7

EU 2016/2281 Table 22.

(*) With the water flow rate determined during “A” test for units with a fixed water flow rate.

SSCEE (Seasonal Space Cooling Energy Efficiency)

- Capacity Control - Variable.
- Standard Rating Condition - Low Temperature Operation.

Air to water comfort chillers.

Rating Point	T_1 (°C)	Part load ratio (%)	Outdoor air dry bulb temperature (°C)	Fan coil application inlet/ outlet water temperature (°C)		Cooling floor application inlet/ outlet water temperatures (°C)
				Fixed outlet	Variable outlet (*)(*)	
A	35	100 %	35	12/7	12/7	23/18
B	30	74 %	30	(*)/7	(*)/8.5	(*)/18
C	25	47 %	25	(*)/7	(*)/10	(*)/18
D	20	21 %	20	(*)/7	(*)/11.5	(*)/18

EU 2016/2281 Table 21.

Technical Data

Ecodesign - TCC (R)

	Notes:		TCC11R03Z-64	TCC11R04G-53	TCC11R06G-53	TCC11R08G-53	TCC12R08G-55
SEPR	1,3,5		6.9	7.2	8.0	8.4	7.1
SEPR Tier			Tier 2 (2021)	Tier 2 (2021)	Tier 2 (2021)	Tier 2 (2021)	Tier 2 (2021)
Annual Electricity Consumption		kWh/a	205172.4	235404.6	232468.2	227994.5	463764.4
Rated Refrigerant Capacity P_A	1,3,5	kW	189.7	229.7	249.7	259.7	444.6
Rated Power Input D_A		kW	61.6	71.4	71.8	71.4	142.0
Rated $EER_{DC,A}$			3.08	3.22	3.48	3.64	3.13
Declared Refrigerant Capacity P_B	1,3,5	kW	177.0	214.4	233.0	242.3	414.9
Declared Power Input D_B		kW	41.3	46.3	46.0	45.4	91.8
Declared $EER_{DC,B}$			4.28	4.63	5.07	5.34	4.52
Declared Refrigerant Capacity P_C	1,3,5	kW	164.3	199.0	216.3	225.0	385.3
Declared Power Input D_C		kW	26.4	30.0	29.7	29.1	59.1
Declared $EER_{DC,C}$			6.22	6.64	7.29	7.73	6.51
Declared Refrigerant Capacity P_D	1,3,5	kW	151.7	183.7	199.7	207.7	355.6
Declared Power Input D_D		kW	16.0	18.8	18.5	18.1	37.0
Declared $EER_{DC,D}$			9.47	9.75	10.80	11.50	9.62

SSCEE	2,3,5	%	190.3	193.4	216.1	227.3	203.0
SSCEE Tier			Tier 2 (2021)	Tier 2 (2021)	Tier 2 (2021)	Tier 2 (2021)	Tier 2 (2021)
Rated Cooling Capacity $P_{rated,c}$	2,4,5	kW	190.0	230.0	250.0	260.0	445.0
Declared Cooling Capacity 35°C Pdc	2,3,5	kW	189.7	229.7	249.7	259.7	444.6
Declared EER_d 35°C			3.08	3.22	3.48	3.64	3.13
Declared Cooling Capacity 30°C Pdc	2,3,5	kW	139.7	169.2	183.9	191.2	327.5
Declared EER_d 30°C			4.12	4.18	4.62	4.90	4.08
Declared Cooling Capacity 25°C Pdc	2,3,5	kW	78.1	108.6	118.1	122.8	210.4
Declared EER_d 25°C			5.44	5.11	5.97	6.29	5.51
Declared Cooling Capacity 20°C Pdc	2,3,5	kW	63.6	93.3	91.2	90.1	89.4
Declared EER_d 20°C			6.32	6.84	7.44	7.79	7.47
Sound Power Level		dB(A)	86	89	87	87	91
Air Volume		m^3/h	64271	83219	100957	114944	164422
Off mode P_{OFF}		kW	0.249	0.249	0.249	0.249	0.301
Thermostat-off mode P_{TO}		kW	0.871	0.768	0.902	0.957	1.284
Standby Mode P_{SB}		kW	0.330	0.330	0.340	0.350	0.453
Crankcase heater mode P_{CK}		kW	0.000	0.000	0.000	0.000	0.000

(1) Nominal conditions as stated in EU 2016/2281 Table 22.
(2) Nominal conditions as stated in EU 2016/2281 Table 21.
(3) Performance data (Nett) is supplied in accordance with EN14511-1:2018.
(4) Performance data (Gross) is supplied excluding absorbed pump power as per EN14511-1:2018.
(5) All performance data based upon standard waterside configuration.

Technical Data

Ecodesign

	Notes:		TCC12R10G-55	TCC22R08G-58	TCC22R10G-58	TCC23R12G-60	TCC23R14G-60
SEPR	1,3,5		7.4	7.2	7.6	7.3	7.5
SEPR Tier			Tier 2 (2021)	Tier 2 (2021)	Tier 2 (2021)	Tier 2 (2021)	Tier 2 (2021)
Annual Electricity Consumption		kWh/a	473003.3	456121.2	463916.7	631624.1	633323.2
Rated Refrigerant Capacity P_A	1,3,5	kW	474.6	444.6	474.6	619.6	644.5
Rated Power Input D_A		kW	146.4	139.3	142.9	194.9	196.9
Rated $EER_{DC,A}$			3.24	3.19	3.32	3.18	3.27
Declared Refrigerant Capacity P_B	1,3,5	kW	442.9	414.9	442.9	578.2	601.5
Declared Power Input D_B		kW	93.7	90.4	92.0	126.8	127.3
Declared $EER_{DC,B}$			4.73	4.59	4.81	4.56	4.73
Declared Refrigerant Capacity P_C	1,3,5	kW	411.2	385.3	411.2	536.9	558.5
Declared Power Input D_C		kW	60.3	58.2	59.3	80.9	81.2
Declared $EER_{DC,C}$			6.82	6.61	6.93	6.63	6.88
Declared Refrigerant Capacity P_D	1,3,5	kW	379.6	355.6	379.6	495.6	515.5
Declared Power Input D_D		kW	37.7	36.3	36.8	49.7	49.8
Declared $EER_{DC,D}$			10.08	9.80	10.30	9.96	10.35

SSCEE	2,3,5	%	209.3	191.5	204.3	215.0	222.0
SSCEE Tier			Tier 2 (2021)	Tier 2 (2021)	Tier 2 (2021)	Tier 2 (2021)	Tier 2 (2021)
Rated Cooling Capacity $P_{rated,c}$	2,4,5	kW	475.0	445.0	475.0	620.0	645.0
Declared Cooling Capacity 35°C Pdc	2,3,5	kW	474.6	444.6	474.6	619.6	644.5
Declared EER_d 35°C			3.24	3.19	3.32	3.18	3.27
Declared Cooling Capacity 30°C Pdc	2,3,5	kW	349.6	327.5	349.6	456.4	474.8
Declared EER_d 30°C			4.30	4.12	4.35	4.36	4.53
Declared Cooling Capacity 25°C Pdc	2,3,5	kW	224.6	210.4	224.6	293.3	305.1
Declared EER_d 25°C			5.65	5.12	5.66	5.77	6.01
Declared Cooling Capacity 20°C Pdc	2,3,5	kW	88.7	92.4	91.2	130.1	135.3
Declared EER_d 20°C			7.62	6.52	6.80	8.01	8.15
Sound Power Level		dB(A)	91	91	91	93	92
Air Volume		m^3/h	186564	163570	185149	233763	251101
Off mode P_{OFF}		kW	0.301	0.322	0.322	0.375	0.375
Thermostat-off mode P_{TO}		kW	1.497	1.284	1.497	1.414	1.551
Standby Mode P_{SB}		kW	0.463	0.474	0.484	0.596	0.606
Crankcase heater mode P_{CK}		kW	0.000	0.000	0.000	0.000	0.000

(1) Nominal conditions as stated in EU 2016/2281 Table 22.
(2) Nominal conditions as stated in EU 2016/2281 Table 21.
(3) Performance data (Nett) is supplied in accordance with EN14511-1:2018.
(4) Performance data (Gross) is supplied excluding absorbed pump power as per EN14511-1:2018.
(5) All performance data based upon standard waterside configuration.

Technical Data

Ecodesign

	Notes:		TCC23R16G-60	TCC23R18G-60	TCC24R18G-62	TCC24R20G-62
SEPR	1,3,5		7.6	7.7	7.5	7.6
SEPR Tier			Tier 2 (2021)	Tier 2 (2021)	Tier 2 (2021)	Tier 2 (2021)
Annual Electricity Consumption		kWh/a	673689.8	712050.8	809127.0	835702.6
Rated Refrigerant Capacity P_A	1,3,5	kW	694.5	739.4	814.5	854.4
Rated Power Input D_A		kW	209.6	222.3	252.1	260.9
Rated $EER_{DC,A}$			3.31	3.33	3.23	3.27
Declared Refrigerant Capacity P_B	1,3,5	kW	648.2	690.1	760.1	797.4
Declared Power Input D_B		kW	134.6	141.7	163.5	168.5
Declared $EER_{DC,B}$			4.82	4.87	4.65	4.73
Declared Refrigerant Capacity P_C	1,3,5	kW	601.8	640.8	705.8	740.4
Declared Power Input D_C		kW	86.3	91.1	103.9	107.2
Declared $EER_{DC,C}$			6.97	7.03	6.79	6.91
Declared Refrigerant Capacity P_D	1,3,5	kW	555.5	591.4	651.5	683.4
Declared Power Input D_D		kW	53.2	56.4	63.4	65.6
Declared $EER_{DC,D}$			10.44	10.49	10.28	10.42
SSCEE	2,3,5	%	223.4	225.6	223.5	224.6
SSCEE Tier			Tier 2 (2021)	Tier 2 (2021)	Tier 2 (2021)	Tier 2 (2021)
Rated Cooling Capacity $P_{rated,c}$	2,4,5	kW	695.0	740.0	815.0	855.0
Declared Cooling Capacity 35°C Pdc	2,3,5	kW	694.5	739.4	814.5	854.4
Declared EER_d 35°C			3.31	3.33	3.23	3.27
Declared Cooling Capacity 30°C Pdc	2,3,5	kW	511.6	544.7	600.0	629.4
Declared EER_d 30°C			4.48	4.50	4.43	4.39
Declared Cooling Capacity 25°C Pdc	2,3,5	kW	328.7	350.0	385.5	404.4
Declared EER_d 25°C			6.06	6.21	6.35	6.44
Declared Cooling Capacity 20°C Pdc	2,3,5	kW	145.8	155.2	171.1	179.4
Declared EER_d 20°C			8.34	8.35	7.94	7.99
Sound Power Level		dB(A)	92	92	94	94
Air Volume		m^3/h	282916	304746	323508	347767
Off mode P_{OFF}		kW	0.375	0.375	0.427	0.427
Thermostat-off mode P_{TO}		kW	1.851	2.149	1.961	2.198
Standby Mode P_{SB}		kW	0.616	0.626	0.729	0.739
Crankcase heater mode P_{CK}		kW	0.000	0.000	0.000	0.000

(1) Nominal conditions as stated in EU 2016/2281 Table 22.
(2) Nominal conditions as stated in EU 2016/2281 Table 21.
(3) Performance data (Nett) is supplied in accordance with EN14511-1:2018.
(4) Performance data (Gross) is supplied excluding absorbed pump power as per EN14511-1:2018.
(5) All performance data based upon standard waterside configuration.

Technical Data

Ecodesign - TCC (X)

	Notes:		TCC11X03Z-64	TCC11X04G-53	TCC11X06G-53	TCC11X08G-53	TCC12X08G-55
SEPR	1,3,5		7.1	7.8	8.6	9.2	6.9
SEPR Tier			Tier 2 (2021)	Tier 2 (2021)	Tier 2 (2021)	Tier 2 (2021)	Tier 2 (2021)
Annual Electricity Consumption		kWh/a	181665.3	184381.5	184176.6	180717.3	382296.6
Rated Refrigerant Capacity P_A	1,3,5	kW	174.7	194.7	214.6	224.7	138.4
Rated Power Input D_A		kW	59.3	58.3	57.5	57.0	36.6
Rated $EER_{DC,A}$			2.95	3.34	3.73	3.94	3.78
Declared Refrigerant Capacity P_B	1,3,5	kW	163.0	181.7	200.3	209.7	331.0
Declared Power Input D_B		kW	38.2	37.3	37.3	36.8	78.8
Declared $EER_{DC,B}$			4.26	4.87	5.37	5.70	4.20
Declared Refrigerant Capacity P_C	1,3,5	kW	151.4	168.7	185.9	194.7	307.3
Declared Power Input D_C		kW	23.6	23.6	23.7	23.3	49.3
Declared $EER_{DC,C}$			6.42	7.15	7.85	8.36	6.23
Declared Refrigerant Capacity P_D	1,3,5	kW	139.7	155.7	171.6	179.7	283.7
Declared Power Input D_D		kW	13.7	14.4	14.3	14.0	29.9
Declared $EER_{DC,D}$			10.21	10.80	11.98	12.84	9.50
SSCEE	2,3,5	%	189.4	203.8	221.9	234.0	202.7
SSCEE Tier			Tier 2 (2021)	Tier 2 (2021)	Tier 2 (2021)	Tier 2 (2021)	Tier 2 (2021)
Rated Cooling Capacity $P_{rated,c}$	2,4,5	kW	175.0	195.0	215.0	225.0	355.0
Declared Cooling Capacity 35°C Pdc	2,3,5	kW	174.7	194.7	214.6	224.7	138.4
Declared EER_d 35°C			2.95	3.34	3.73	3.94	3.78
Declared Cooling Capacity 30°C Pdc	2,3,5	kW	128.6	143.4	158.0	165.5	261.3
Declared EER_d 30°C			4.08	4.29	4.73	5.03	4.19
Declared Cooling Capacity 25°C Pdc	2,3,5	kW	78.0	103.0	101.5	106.3	167.8
Declared EER_d 25°C			5.44	5.73	6.19	6.54	5.52
Declared Cooling Capacity 20°C Pdc	2,3,5	kW	63.2	93.4	91.2	90.2	89.8
Declared EER_d 20°C			6.34	6.84	7.46	7.83	6.69
Sound Power Level		dB(A)	83	87	87	87	90
Air Volume		m^3/h	43904	58539	87809	102312	117079
Off mode P_{OFF}		kW	0.249	0.249	0.249	0.249	0.301
Thermostat-off mode P_{TO}		kW	0.737	0.527	0.687	0.737	0.805
Standby Mode P_{SB}		kW	0.330	0.330	0.340	0.350	0.453
Crankcase heater mode P_{CK}		kW	0.000	0.000	0.000	0.000	0.000

(1) Nominal conditions as stated in EU 2016/2281 Table 22.
(2) Nominal conditions as stated in EU 2016/2281 Table 21.
(3) Performance data (Nett) is supplied in accordance with EN14511-1:2018.
(4) Performance data (Gross) is supplied excluding absorbed pump power as per EN14511-1:2018.
(5) All performance data based upon standard waterside configuration.

Technical Data

Ecodesign

	Notes:		TCC12X10G-55	TCC22X08G-58	TCC22X10G-58	TCC23X12G-60	TCC23X14G-60
SEPR	1,3,5		8.4	6.0	8.4	7.6	8.0
SEPR Tier			Tier 2 (2021)	Tier 2 (2021)	Tier 2 (2021)	Tier 2 (2021)	Tier 2 (2021)
Annual Electricity Consumption		kWh/a	336834.2	435689.1	337059.3	552099.1	541081.1
Rated Refrigerant Capacity P_A	1,3,5	kW	379.7	224.0	379.7	569.6	584.6
Rated Power Input D_A		kW	106.9	10222.4	107.2	176.7	172.0
Rated $EER_{DC,A}$			3.55	0.02	3.54	3.22	3.40
Declared Refrigerant Capacity P_B	1,3,5	kW	354.3	331.0	354.3	531.6	545.6
Declared Power Input D_B		kW	69.2	72.5	69.4	112.8	110.5
Declared $EER_{DC,B}$			5.12	4.57	5.11	4.71	4.94
Declared Refrigerant Capacity P_C	1,3,5	kW	329.0	307.3	329.0	493.6	506.6
Declared Power Input D_C		kW	43.4	45.3	43.4	70.8	69.6
Declared $EER_{DC,C}$			7.59	6.78	7.57	6.98	7.27
Declared Refrigerant Capacity P_D	1,3,5	kW	303.7	283.7	303.7	455.6	467.6
Declared Power Input D_D		kW	26.0	27.4	26.0	43.0	42.0
Declared $EER_{DC,D}$			11.67	10.37	11.69	10.60	11.14

SSCEE	2,3,5	%	236.8	196.9	208.0	219.7	228.7
SSCEE Tier			Tier 2 (2021)	Tier 2 (2021)	Tier 2 (2021)	Tier 2 (2021)	Tier 2 (2021)
Rated Cooling Capacity $P_{rated,c}$	2,4,5	kW	380.0	355.0	380.0	570.0	585.0
Declared Cooling Capacity 35°C Pdc	2,3,5	kW	379.7	354.7	379.7	569.6	584.6
Declared EER_d 35°C			3.55	3.31	3.54	3.22	3.40
Declared Cooling Capacity 30°C Pdc	2,3,5	kW	279.7	261.3	279.7	419.6	430.7
Declared EER_d 30°C			4.95	4.19	4.44	4.45	4.70
Declared Cooling Capacity 25°C Pdc	2,3,5	kW	179.7	167.8	179.7	269.6	276.7
Declared EER_d 25°C			6.64	5.17	5.46	5.89	6.14
Declared Cooling Capacity 20°C Pdc	2,3,5	kW	89.1	92.9	91.6	119.6	122.8
Declared EER_d 20°C			8.15	6.92	7.28	8.24	8.41
Sound Power Level		dB(A)	90	90	90	92	92
Air Volume		m^3/h	146348	117079	146348	175618	204887
Off mode P_{OFF}		kW	0.301	0.322	0.322	0.375	0.375
Thermostat-off mode P_{TO}		kW	0.916	0.805	0.916	1.163	1.235
Standby Mode P_{SB}		kW	0.463	0.474	0.484	0.596	0.606
Crankcase heater mode P_{CK}		kW	0.000	0.000	0.000	0.000	0.000

(1) Nominal conditions as stated in EU 2016/2281 Table 22.
(2) Nominal conditions as stated in EU 2016/2281 Table 21.
(3) Performance data (Nett) is supplied in accordance with EN14511-1:2018.
(4) Performance data (Gross) is supplied excluding absorbed pump power as per EN14511-1:2018.
(5) All performance data based upon standard waterside configuration.

Technical Data

Ecodesign

	Notes:		TCC23X16G-60	TCC23X18G-60	TCC24X18G-62	TCC24X20G-62
SEPR	1,3,5		8.2	8.3	8.1	8.2
SEPR Tier			Tier 2 (2021)	Tier 2 (2021)	Tier 2 (2021)	Tier 2 (2021)
Annual Electricity Consumption		kWh/a	552784.5	586898.7	642914.4	661753.9
Rated Refrigerant Capacity P_A	1,3,5	kW	614.6	659.5	699.6	734.5
Rated Power Input D_A		kW	174.9	184.8	210.1	212.9
Rated $EER_{DC,A}$			3.51	3.57	3.33	3.45
Declared Refrigerant Capacity P_B	1,3,5	kW	573.6	615.5	652.9	685.5
Declared Power Input D_B		kW	112.9	119.1	131.8	136.0
Declared $EER_{DC,B}$			5.08	5.17	4.95	5.04
Declared Refrigerant Capacity P_C	1,3,5	kW	532.6	571.5	606.2	636.5
Declared Power Input D_C		kW	71.3	75.6	83.0	85.4
Declared $EER_{DC,C}$			7.47	7.56	7.31	7.45
Declared Refrigerant Capacity P_D	1,3,5	kW	491.6	527.5	559.6	587.5
Declared Power Input D_D		kW	42.8	45.7	49.5	51.0
Declared $EER_{DC,D}$			11.49	11.55	11.29	11.53

SSCEE	2,3,5	%	232.8	236.7	236.7	239.8
SSCEE Tier			Tier 2 (2021)	Tier 2 (2021)	Tier 2 (2021)	Tier 2 (2021)
Rated Cooling Capacity $P_{rated,c}$	2,4,5	kW	615.0	660.0	700.0	735.0
Declared Cooling Capacity 35°C Pdc	2,3,5	kW	614.6	659.5	699.6	734.5
Declared EER_d 35°C			3.51	3.57	3.33	3.45
Declared Cooling Capacity 30°C Pdc	2,3,5	kW	452.7	485.8	515.4	541.1
Declared EER_d 30°C			4.73	4.83	4.91	4.92
Declared Cooling Capacity 25°C Pdc	2,3,5	kW	290.9	312.2	331.2	347.7
Declared EER_d 25°C			6.22	6.39	6.57	6.69
Declared Cooling Capacity 20°C Pdc	2,3,5	kW	129.0	138.5	146.9	154.3
Declared EER_d 20°C			8.68	8.72	8.38	8.48
Sound Power Level		dB(A)	92	92	93	93
Air Volume		m³/h	234157	263427	263427	292696
Off mode P_{OFF}		kW	0.375	0.375	0.427	0.427
Thermostat-off mode P_{TO}		kW	1.388	1.638	1.370	1.536
Standby Mode P_{SB}		kW	0.616	0.626	0.729	0.739
Crankcase heater mode P_{CK}		kW	0.000	0.000	0.000	0.000

(1) Nominal conditions as stated in EU 2016/2281 Table 22.
(2) Nominal conditions as stated in EU 2016/2281 Table 21.
(3) Performance data (Nett) is supplied in accordance with EN14511-1:2018.
(4) Performance data (Gross) is supplied excluding absorbed pump power as per EN14511-1:2018.
(5) All performance data based upon standard waterside configuration.

Technical Data

Ecodesign - TCF (R)

	Notes:		TCF11R06G-54	TCF11R08G-54	TCF12R08G-56	TCF12R10G-57	TCF12R12G-57
SEPR	1,3,5		8.6	9.1	7.2	8.6	8.8
SEPR Tier			Tier 2 (2021)	Tier 2 (2021)	Tier 2 (2021)	Tier 2 (2021)	Tier 2 (2021)
Annual Electricity Consumption		kWh/a	235735.6	231733.0	458058.9	411473.3	423828.3
Rated Refrigerant Capacity P_A	1,3,5	kW	274.5	284.5	444.3	474.3	504.3
Rated Power Input D_A		kW	87.9	86.4	147.7	149.2	154.7
Rated $EER_{DC,A}$			3.12	3.29	3.01	3.18	3.26
Declared Refrigerant Capacity P_B	1,3,5	kW	256.1	265.5	414.7	442.6	470.6
Declared Power Input D_B		kW	55.4	54.2	96.2	96.5	99.4
Declared $EER_{DC,B}$			4.62	4.90	4.31	4.59	4.73
Declared Refrigerant Capacity P_C	1,3,5	kW	237.8	246.5	385.0	411.0	436.9
Declared Power Input D_C		kW	36.0	35.3	62.7	62.9	64.8
Declared $EER_{DC,C}$			6.60	6.99	6.14	6.54	6.74
Declared Refrigerant Capacity P_D	1,3,5	kW	219.5	227.5	355.3	379.3	403.3
Declared Power Input D_D		kW	13.5	13.4	32.6	23.7	24.3
Declared $EER_{DC,D}$			16.29	17.01	10.91	16.03	16.58

SSCEE	2,3,5	%	195.3	206.6	194.6	201.0	206.6
SSCEE Tier			Tier 2 (2021)	Tier 2 (2021)	Tier 2 (2021)	Tier 2 (2021)	Tier 2 (2021)
Rated Cooling Capacity $P_{rated,c}$	2,4,5	kW	275.0	285.0	445.0	475.0	505.0
Declared Cooling Capacity 35°C Pdc	2,3,5	kW	274.5	284.5	444.3	474.3	504.3
Declared EER_d 35°C			3.12	3.29	3.01	3.18	3.26
Declared Cooling Capacity 30°C Pdc	2,3,5	kW	202.1	209.5	327.2	349.3	371.4
Declared EER_d 30°C			4.36	4.65	3.90	4.16	4.33
Declared Cooling Capacity 25°C Pdc	2,3,5	kW	129.7	134.5	210.1	224.3	238.5
Declared EER_d 25°C			5.51	5.86	5.72	5.93	6.05
Declared Cooling Capacity 20°C Pdc	2,3,5	kW	91.5	90.3	90.1	89.3	105.6
Declared EER_d 20°C			6.71	7.02	6.91	6.90	7.12
Sound Power Level		dB(A)	88	87	92	91	91
Air Volume		m^3/h	112548	128461	166815	188413	207738
Off mode P_{OFF}		kW	0.249	0.249	0.301	0.301	0.301
Thermostat-off mode P_{TO}		kW	2.035	2.050	2.909	3.291	3.605
Standby Mode P_{SB}		kW	0.340	0.350	0.453	0.463	0.473
Crankcase heater mode P_{CK}		kW	0.000	0.000	0.000	0.000	0.000

(1) Nominal conditions as stated in EU 2016/2281 Table 22.
(2) Nominal conditions as stated in EU 2016/2281 Table 21.
(3) Performance data (Nett) is supplied in accordance with EN14511-1:2018.
(4) Performance data (Gross) is supplied excluding absorbed pump power as per EN14511-1:2018.
(5) All performance data based upon standard waterside configuration.

Technical Data

Ecodesign

	Notes:		TCF22R10G-59	TCF23R12G-61	TCF23R14G-61	TCF23R16G-61	TCF23R18G-61
SEPR	1,3,5		7.9	7.9	8.3	8.4	8.5
SEPR Tier			Tier 2 (2021)	Tier 2 (2021)	Tier 2 (2021)	Tier 2 (2021)	Tier 2 (2021)
Annual Electricity Consumption		kWh/a	447658.2	617821.1	606564.2	629504.0	647476.0
Rated Refrigerant Capacity P_A	1,3,5	kW	474.3	659.2	679.2	709.2	739.2
Rated Power Input D_A		kW	147.2	218.3	216.8	221.5	227.2
Rated $EER_{DC,A}$			3.22	3.02	3.13	3.20	3.25
Declared Refrigerant Capacity P_B	1,3,5	kW	442.6	615.2	633.9	661.9	689.8
Declared Power Input D_B		kW	95.7	142.6	141.0	143.4	146.3
Declared $EER_{DC,B}$			4.63	4.31	4.50	4.62	4.71
Declared Refrigerant Capacity P_C	1,3,5	kW	411.0	571.2	588.5	614.5	640.5
Declared Power Input D_C		kW	62.4	92.7	91.6	93.1	95.2
Declared $EER_{DC,C}$			6.59	6.16	6.43	6.60	6.73
Declared Refrigerant Capacity P_D	1,3,5	kW	379.3	527.2	543.2	567.2	591.2
Declared Power Input D_D		kW	30.8	36.9	35.7	38.6	40.2
Declared $EER_{DC,D}$			12.30	14.29	15.20	14.68	14.69

SSCEE	2,3,5	%	189.3	190.8	198.1	200.9	204.5
SSCEE Tier			Tier 2 (2021)	Tier 2 (2021)	Tier 2 (2021)	Tier 2 (2021)	Tier 2 (2021)
Rated Cooling Capacity $P_{rated,c}$	2,4,5	kW	475.0	660.0	680.0	710.0	740.0
Declared Cooling Capacity 35°C Pdc	2,3,5	kW	474.3	659.2	679.2	709.2	739.2
Declared EER_d 35°C			3.22	3.02	3.13	3.20	3.25
Declared Cooling Capacity 30°C Pdc	2,3,5	kW	349.3	485.5	500.3	522.3	544.4
Declared EER_d 30°C			4.17	4.08	4.25	4.26	4.33
Declared Cooling Capacity 25°C Pdc	2,3,5	kW	224.3	311.8	321.3	335.5	349.7
Declared EER_d 25°C			5.30	5.33	5.58	5.65	5.81
Declared Cooling Capacity 20°C Pdc	2,3,5	kW	92.3	138.2	142.4	148.7	155.0
Declared EER_d 20°C			6.34	6.70	6.87	7.07	7.12
Sound Power Level		dB(A)	91	93	93	93	92
Air Volume		m^3/h	187796	248099	263849	292298	309291
Off mode P_{OFF}		kW	0.322	0.375	0.375	0.375	0.375
Thermostat-off mode P_{TO}		kW	3.266	4.267	4.307	4.575	4.865
Standby Mode P_{SB}		kW	0.484	0.596	0.606	0.616	0.626
Crankcase heater mode P_{CK}		kW	0.000	0.000	0.000	0.000	0.000

(1) Nominal conditions as stated in EU 2016/2281 Table 22.
(2) Nominal conditions as stated in EU 2016/2281 Table 21.
(3) Performance data (Nett) is supplied in accordance with EN14511-1:2018.
(4) Performance data (Gross) is supplied excluding absorbed pump power as per EN14511-1:2018.
(5) All performance data based upon standard waterside configuration.

Technical Data

Ecodesign

	Notes:		TCF24R18G-63	TCF24R20G-63
SEPR	1,3,5		7.4	7.1
SEPR Tier			Tier 2 (2021)	Tier 2 (2021)
Annual Electricity Consumption		kWh/a	887395.3	971930.1
Rated Refrigerant Capacity P_A	1,3,5	kW	889.2	929.1
Rated Power Input D_A		kW	287.6	296.2
Rated $EER_{DC,A}$			3.09	3.14
Declared Refrigerant Capacity P_B	1,3,5	kW	829.8	867.1
Declared Power Input D_B		kW	187.0	191.6
Declared $EER_{DC,B}$			4.44	4.53
Declared Refrigerant Capacity P_C	1,3,5	kW	770.5	805.1
Declared Power Input D_C		kW	121.0	124.2
Declared $EER_{DC,C}$			6.37	6.48
Declared Refrigerant Capacity P_D	1,3,5	kW	711.2	743.1
Declared Power Input D_D		kW	63.3	77.5
Declared $EER_{DC,D}$			11.23	9.59
SSCEE	2,3,5	%	201.1	203.9
SSCEE Tier			Tier 2 (2021)	Tier 2 (2021)
Rated Cooling Capacity $P_{rated,c}$	2,4,5	kW	890.0	930.0
Declared Cooling Capacity 35°C Pdc	2,3,5	kW	889.2	929.1
Declared EER_d 35°C			3.09	3.14
Declared Cooling Capacity 30°C Pdc	2,3,5	kW	655.0	684.4
Declared EER_d 30°C			4.12	4.19
Declared Cooling Capacity 25°C Pdc	2,3,5	kW	420.7	439.7
Declared EER_d 25°C			5.92	6.01
Declared Cooling Capacity 20°C Pdc	2,3,5	kW	186.5	194.9
Declared EER_d 20°C			6.81	6.88
Sound Power Level		dB(A)	94	94
Air Volume		m^3/h	348648	373726
Off mode P_{OFF}		kW	0.427	0.427
Thermostat-off mode P_{TO}		kW	4.961	5.268
Standby Mode P_{SB}		kW	0.729	0.739
Crankcase heater mode P_{CK}		kW	0.000	0.000

(1) Nominal conditions as stated in EU 2016/2281 Table 22.
(2) Nominal conditions as stated in EU 2016/2281 Table 21.
(3) Performance data (Nett) is supplied in accordance with EN14511-1:2018.
(4) Performance data (Gross) is supplied excluding absorbed pump power as per EN14511-1:2018.
(5) All performance data based upon standard waterside configuration.

Technical Data

Ecodesign - TCF (X)

	Notes:		TCF11X06G-54	TCF11X08G-54	TCF12X08G-56	TCF12X10G-57	TCF12X12G-57
SEPR	1,3,5		8.2	9.8	7.5	7.6	7.1
SEPR Tier			Tier 2 (2021)	Tier 2 (2021)	Tier 2 (2021)	Tier 2 (2021)	Tier 2 (2021)
Annual Electricity Consumption		kWh/a	203662.3	181416.4	413155.4	427799.9	488038.1
Rated Refrigerant Capacity P_A	1,3,5	kW	224.6	239.6	419.4	439.4	469.3
Rated Power Input D_A		kW	65.0	65.5	146.7	138.3	141.9
Rated $EER_{DC,A}$			3.46	3.66	2.86	3.18	3.31
Declared Refrigerant Capacity P_B	1,3,5	kW	209.6	223.6	391.4	410.0	438.0
Declared Power Input D_B		kW	41.9	42.3	91.7	87.9	90.6
Declared $EER_{DC,B}$			5.00	5.28	4.27	4.66	4.83
Declared Refrigerant Capacity P_C	1,3,5	kW	194.6	207.6	363.4	380.7	406.7
Declared Power Input D_C		kW	27.0	27.3	58.1	56.7	58.7
Declared $EER_{DC,C}$			7.20	7.62	6.25	6.72	6.92
Declared Refrigerant Capacity P_D	1,3,5	kW	179.6	191.6	335.4	351.4	375.3
Declared Power Input D_D		kW	15.2	10.7	27.3	31.9	42.7
Declared $EER_{DC,D}$			11.84	17.92	12.26	11.00	8.80
SSCEE	2,3,5	%	203.8	214.4	196.9	204.9	209.3
SSCEE Tier			Tier 2 (2021)	Tier 2 (2021)	Tier 2 (2021)	Tier 2 (2021)	Tier 2 (2021)
Rated Cooling Capacity $P_{rated,c}$	2,4,5	kW	225.0	240.0	420.0	440.0	470.0
Declared Cooling Capacity 35°C Pdc	2,3,5	kW	224.6	239.6	419.4	439.4	469.3
Declared EER_d 35°C			3.46	3.66	2.86	3.18	3.31
Declared Cooling Capacity 30°C Pdc	2,3,5	kW	165.4	176.4	308.9	323.6	345.6
Declared EER_d 30°C			4.45	4.73	3.98	4.18	4.35
Declared Cooling Capacity 25°C Pdc	2,3,5	kW	106.2	113.3	198.3	207.8	222.0
Declared EER_d 25°C			5.73	6.00	5.79	6.03	6.17
Declared Cooling Capacity 20°C Pdc	2,3,5	kW	91.6	90.4	90.2	89.4	88.7
Declared EER_d 20°C			6.90	7.24	7.06	7.15	7.14
Sound Power Level		dB(A)	87	87	90	90	90
Air Volume		m^3/h	85509	111058	114012	142515	171018
Off mode P_{OFF}		kW	0.249	0.249	0.301	0.301	0.301
Thermostat-off mode P_{TO}		kW	1.267	1.360	2.535	2.743	3.033
Standby Mode P_{SB}		kW	0.340	0.350	0.453	0.463	0.473
Crankcase heater mode P_{CK}		kW	0.000	0.000	0.000	0.000	0.000

(1) Nominal conditions as stated in EU 2016/2281 Table 22.
(2) Nominal conditions as stated in EU 2016/2281 Table 21.
(3) Performance data (Nett) is supplied in accordance with EN14511-1:2018.
(4) Performance data (Gross) is supplied excluding absorbed pump power as per EN14511-1:2018.
(5) All performance data based upon standard waterside configuration.

Technical Data

Ecodesign

	Notes:		TCF22X10G-59	TCF23X12G-61	TCF23X14G-61	TCF23X16G-61	TCF24X18G-63	TCF24X20G-63
SEPR	1,3,5		8.5	8.0	8.4	8.6	7.7	7.8
SEPR Tier			Tier 2 (2021)	Tier 2 (2021)	Tier 2 (2021)	Tier 2 (2021)	Tier 2 (2021)	Tier 2 (2021)
Annual Electricity Consumption		kWh/a	365578.3	584677.8	566861.0	567484.4	817217.3	823686.4
Rated Refrigerant Capacity P_A	1,3,5	kW	419.4	629.2	644.3	659.2	844.2	864.2
Rated Power Input D_A		kW	127.9	220.7	211.0	205.2	281.3	277.1
Rated $EER_{DC,A}$			3.28	2.85	3.05	3.21	3.00	3.12
Declared Refrigerant Capacity P_B	1,3,5	kW	391.4	587.2	601.3	615.2	787.9	806.5
Declared Power Input D_B		kW	82.3	138.2	133.6	131.1	177.7	176.0
Declared $EER_{DC,B}$			4.76	4.25	4.50	4.69	4.43	4.58
Declared Refrigerant Capacity P_C	1,3,5	kW	363.4	545.2	558.3	571.2	731.5	748.9
Declared Power Input D_C		kW	52.7	87.3	85.4	84.3	113.1	112.7
Declared $EER_{DC,C}$			6.89	6.24	6.54	6.77	6.47	6.64
Declared Refrigerant Capacity P_D	1,3,5	kW	335.4	503.2	515.3	527.2	675.2	691.2
Declared Power Input D_D		kW	23.3	34.3	33.1	34.2	56.0	57.9
Declared $EER_{DC,D}$			14.39	14.65	15.59	15.41	12.05	11.94

SSCEE	2,3,5	%	189.0	189.9	199.7	204.4	203.4	207.2
SSCEE Tier			Tier 2 (2021)	Tier 2 (2021)	Tier 2 (2021)	Tier 2 (2021)	Tier 2 (2021)	Tier 2 (2021)
Rated Cooling Capacity $P_{rated,c}$	2,4,5	kW	420.0	630.0	645.0	660.0	845.0	865.0
Declared Cooling Capacity 35°C Pdc	2,3,5	kW	419.4	629.2	644.3	659.2	844.2	864.2
Declared EER_d 35°C			3.28	2.85	3.05	3.21	3.00	3.12
Declared Cooling Capacity 30°C Pdc	2,3,5	kW	308.9	463.5	474.5	485.6	621.8	636.6
Declared EER_d 30°C			4.20	3.98	4.28	4.32	4.19	4.22
Declared Cooling Capacity 25°C Pdc	2,3,5	kW	198.4	297.7	304.8	311.9	399.5	408.9
Declared EER_d 25°C			5.00	5.36	5.61	5.71	5.97	6.09
Declared Cooling Capacity 20°C Pdc	2,3,5	kW	92.4	131.9	135.0	138.2	177.1	181.3
Declared EER_d 20°C			6.63	6.79	6.97	7.24	6.95	7.07
Sound Power Level		dB(A)	90	91	92	92	93	93
Air Volume		m³/h	142515	171018	199521	228024	256527	285030
Off mode P_{OFF}		kW	0.322	0.375	0.375	0.375	0.427	0.427
Thermostat-off mode P_{TO}		kW	2.440	3.821	3.797	3.840	4.386	4.431
Standby Mode P_{SB}		kW	0.484	0.596	0.606	0.616	0.729	0.739
Crankcase heater mode P_{CK}		kW	0.000	0.000	0.000	0.000	0.000	0.000

(1) Nominal conditions as stated in EU 2016/2281 Table 22.
(2) Nominal conditions as stated in EU 2016/2281 Table 21.
(3) Performance data (Nett) is supplied in accordance with EN14511-1:2018.
(4) Performance data (Gross) is supplied excluding absorbed pump power as per EN14511-1:2018.
(5) All performance data based upon standard waterside configuration.

After Sales

Warranty

All Airedale products or parts (non consumable) supplied for installation within the UK mainland and commissioned by an Airedale engineer, carry a full Parts & Labour warranty for a period of 12 months from the date of commissioning or 18 months from the date of despatch, whichever is the sooner.

Parts or Equipment supplied by Airedale for installation within the UK or for Export that are properly commissioned in accordance with Airedale standards and specification, not commissioned by an Airedale engineer; carry a 12 month warranty on non consumable Parts only from the date of commissioning or 18 months from the date of despatch, whichever is the sooner.

Parts or equipment installed or commissioned not to acceptable Airedale standards or specification invalidate all warranty.

Warranty is only valid in the event that

In the period between delivery and commissioning the equipment:

- is properly protected & serviced as per the Airedale installation & maintenance manual provided
- where applicable the glycol content is maintained to the correct level.

In the event of a problem being reported and once warranty is confirmed* as valid under the given installation and operating conditions, the Company will provide the appropriate warranty coverage (as detailed above) attributable to the rectification of any affected Airedale equipment supplied (excluding costs for any specialist access or lifting equipment that must be ordered by the customer).

*Once warranty is confirmed, maintenance must be continued to validate the warranty period.

Any spare part supplied by Airedale under warranty shall be warranted for the unexpired period of the warranty or 3 months from delivery, whichever period is the longer. To be read in conjunction with the Airedale Conditions of Sale - Warranty and Warranty Procedure, available upon request.

Procedure

When a component part fails, a replacement part should be obtained through our Spares department. If the part is considered to be under warranty, the following details are required to process this requirement. Full description of part required, including Airedale's part number, if known. The original equipment serial number. An appropriate purchase order number.

A spares order will be raised under our warranty system and the replacement part will be despatched, usually within 24 hours should they be in stock. When replaced, the faulty part must be returned to Airedale with a suitably completed and securely attached "Faulty Component Return" (FCR) tag. FCR tags are available from Airedale and supplied with each Warranty order.

On receipt of the faulty part, suitably tagged, Airedale will pass to its Warranty department, where it will be fully inspected and tested in order to identify the reason for failure, identifying at the same time whether warranty is justified or not.

On completion of the investigation of the returned part, a full "Report on Goods Returned" will be issued. On occasion the release of this complete report may be delayed as component manufacturers become involved in the investigation. When warranty is allowed, a credit against the Warranty invoice will be raised. Should warranty be refused the Warranty invoice becomes payable on normal terms.

Exclusions

Warranty may be refused for the following reasons.

- Misapplication of product or component
- Incorrect site installation
- Incomplete commissioning documentation
- Inadequate site installation
- Inadequate site maintenance
- Damage caused by mishandling
- Replaced part being returned damaged without explanation
- Unnecessary delays incurred in return of defective component

Returns analysis

All faulty components returned under warranty are analysed on a monthly basis as a means of verifying component and product reliability as well as supplier performance. It is important that all component failures are reported correctly.

Head Office
Airedale International Air Conditioning Ltd
Leeds Road
Rawdon
Leeds LS19 6JY
Tel: +44 (0) 113 2391000
Fax:+44 (0) 113 2507219
E-mail enquiries@airedale.com
Web www.airedale.com

TM_TURBO_TCC_TCF_R1234_SPRAY_9635384_1.3.0_09_2019