380V / 3 PH / N / 60Hz
220V / 3 PH / 60Hz

Airedale by MODINE

EasiCool™ EZRE

Downflow and Upflow - Precision Air Conditioning

Direct Expansion

6kW - 60kW

Technical Manual

CE

bsi. ISO 9001 Quality Management FM00542 ISO 14001 Environmental Management EMS52086

Warranty, Commissioning & Maintenance

As standard, Airedale guarantees all non consumable parts only for a period of 12 months, variations tailored to suit product and application are also available; please contact Airedale for full terms and details.

To further protect your investment in Airedale products, Airedale can provide full commissioning services, comprehensive maintenance packages and service cover 24 hours a day, 365 days a year (UK mainland). For a free quotation contact Airedale or your local Sales Engineer.

All Airedale products are designed in accordance with EU Directives regarding prevention of build up of water, associated with the risk of contaminants such as Legionella.

For effective prevention of such risk it is necessary that the equipment is maintained in accordance with Airedale recommendations.

SafeCool

In addition to commissioning, a 24 hour, 7 days a week on-call service is available throughout the year to UK mainland sites. This service will enable customers to contact a duty engineer outside normal working hours and receive assistance over the telephone. The duty engineer can, if necessary, attend site, usually within 24 hours or less. Full details will be forwarded on acceptance of the maintenance agreement.

CAUTION ⚠	Warranty cover is not a substitute for maintenance. Warranty cover is conditional to maintenance being carried out in accordance with the recommendations provided during the warranty period. Failure to have the maintenance procedures carried out will invalidate the warranty and any liabilities by Airedale International Air Conditioning Ltd.

Spares

A spares list for 1, 3 and 5 years will be supplied with every unit and is also available from our Spares department on request.

Training

As well as our comprehensive range of products, Airedale offers a modular range of Refrigeration and Air Conditioning Training courses, for further information please contact Airedale.

Customer Services

For further assistance, please e-mail: enquiries@airedale.com or telephone:

UK Sales Enquiries	+ 44 (0) 113 239 1000	enquiries@airedale.com
International Enquiries	+ 44 (0) 113 239 1000	enquiries@airedale.com
Spares Hot Line	+ 44 (0) 113 238 7878	spares@airedale.com
Airedale Service	+ 44 (0) 113 239 1000	service@airedale.com
Technical Support	+ 44 (0) 113 239 1000	tech.support@airedale.com
Training Enquiries	+ 44 (0) 113 239 1000	enquiries@airedale.com

For information, visit us at our Web Site: www.airedale.com

Airedale Ltd endeavours to ensure that the information in this document is correct and fairly stated, but none of the statements are to be relied upon as a statement or representation of fact. Airedale Ltd does not accept liability for any error or omission, or for any reliance placed on the information contained in this document. The development of Airedale products and services is continuous and the information in this document may not be up to date. It is important to check the current position with Airedale Ltd at the address stated. This document is not part of a contract or licence unless expressly agreed. No part of this document may be reproduced or transmitted in any form or by any means, electronic or mechanical, including photocopying, recording, or information storage and retrieval systems, for any purpose other than the purchaser's personal use, without the express written permission of Airedale Ltd.
© 2019 Airedale International Air Conditioning Limited. All rights reserved. Printed in the UK.

Health and Safety

IMPORTANT

The information contained in this manual is critical to the correct operation and maintenance of the unit and should be read by all persons responsible for the installation, commissioning and maintenance of this Airedale unit.

Safety

The equipment has been designed and manufactured to meet international safety standards but, like any mechanical/ electrical equipment, care must be taken if you are to obtain the best results.

CAUTION ⚠	When working with any air conditioning units ensure that the electrical isolator is switched off prior to servicing or repair work and that there is no power to any part of the equipment. Also ensure that there are no other power feeds to the unit such as fire alarm circuits, BMS circuits etc.

Electrical installation commissioning and maintenance work on this equipment should be undertaken by competent and trained personnel in accordance with local relevant standards and codes of practice.

The refrigerant used in this range of products is classified under the COSHH regulations as an irritant, with set Workplace Exposure Levels (WEL) for consideration if this plant is installed in confined or poorly ventilated areas.

A full hazard data sheet in accordance with COSHH regulations is available should this be required.

Protective Personal Equipment

Airedale recommends that personal protective equipment is used whilst installing, maintaining and commissioning equipment.

Refrigerant Warning

The Airedale Easicool unit uses R410A refrigerant which requires careful attention to proper storage and handling procedures.

Use only manifold gauge sets designed for use with R410A refrigerant. Use only refrigerant recovery units and cylinders designed for high pressure refrigerants.

R410A must only be charged in the liquid state to ensure correct blend makeup.

The refrigerant must be stored in a clean, dry area away from sunlight and must never be stored above 50°C.

Global Warming Potential

The R410A refrigerant has a GWP of 2088 (based on EN378-1:2016, 100 year life)

Manual Handling

Some operations when servicing or maintaining the unit may require additional assistance with regard to manual handling. This requirement is down to the discretion of the engineer. Remember do not perform a lift that exceeds your ability.

Pressure Equipment Directive (2014/68/EU)

Minimum and Maximum Operation Temperature (TS) and Pressure (PS)

Refrigeration

Allowable Temperature Range (TS), = Min -20°C* to Max 120°C**

Maximum Allowable Pressure (PS) = High Side 40.7 Barg Low Side N/A Barg

*Based on the refrigerant temperature in the unit off state.

**Based on the maximum allowable super heated refrigerant temperature.

Waterside

Allowable Temperature Range (TS), = Min -20°C* to Max 120°C**

Maximum Allowable Pressure (PS) = 10 Barg

*Based on the refrigerant temperature in the unit off state.

Pressure System Safety Regulations 2000

Refrigeration assemblies/systems may constitute a Pressure System as defined in the Pressure System Safety Regulations 2000.

Ecodesign Directive 2009/125/EC

The EasiCool range is exempt from Ecodesign when applied in process cooling applications (i.e. data centres). When the easiCool range is applied in comfort cooling applications above 12kW they are non-Ecodesign compliant. Please refer to your Airedale account manager for full details

Environmental Considerations

Freeze Protection

Airedale recommends the following actions to help protect the unit during low temperature operation. This also includes the units subject to low ambient temperatures.

Units with supply water temperatures below +5°C

Glycol is recommended when a supply water temperature of +5°C or below is required or when static water can be exposed to freezing temperatures.

Units subject to ambient temperatures lower than 0°C

Glycol of an appropriate concentration(1) is used within the system to ensure adequate protection. Please ensure that the concentration is capable of protection at least 3°C lower than ambient.

Water / glycol solution is constantly circulated through all waterside pipe work and coils to avoid static water from freezing.

Ensure that pumps are started and running even during shut down periods, when the ambient is within 3°C of the solution freeze point (1) (i.e. if the solution freezes at 0°C, the pump must be operating at 3°C ambient).

(1) Refer to your glycol supplier for details.

Environmental Policy

It is our policy to:

- Take a proactive approach to resolve environmental issues and ensure compliance with regulatory requirements
- Train personnel in sound environmental practices
- Pursue opportunities to conserve resources, prevent pollution and eliminate waste
- Manufacture products in a responsible manner with minimum impact on the environment
- Reduce our use of chemicals and minimise their release to the environment
- Measure, control and verify environmental performance through internal and external audits
- Continually improve our environmental performance

CE Directive

Airedale certify that the equipment detailed in this manual conforms with the following EC Directives:

Electromagnetic Compatibility Directive (EMC)	2014/30/EU
Machinery Directive (MD)	89/392/EEC version 2006/42/EC
Pressure Equipment Directive (PED)	2014/68/EU

To comply with these directives appropriate national & harmonised standards have been applied. These are listed on the Declaration of Conformity, supplied with each product.

Contents

Warranty, Commissioning & Maintenance 2
Customer Services 2
Health and Safety 3
Manual Handling 3
Environmental Considerations 4
Freeze Protection 4
Environmental Policy 4
Specifiers Guide 8
Nomenclature 8
Introduction 8
Unit Overview 9
Construction 10
Refrigeration Components 11
Airflow Components 16
Electrical Components 19
Heating and Humidification 20
Humidification 22
Controls 23
General Features 28
Sound Measurement Method 30
Dimensional & Installation Data 31
Dimensions 31
Positioning 36
Minimum Unit Clearances 37
Weights 39
Refrigeration Pipework 41
Refrigerant Charging Guide 42
Packaged Unit Pre-Charged Refrigerant Volumes 44
Oil Charging Guide 47
Refrigerant Pipesizing Guide - X Type Downflow 48
Ethylene Glycol Correction Factors - WX Models 50
System Pipework Schematic 51
Interconnecting Wiring 53
pLAN Termination 54
Water Detector Tape Installation 55

Technical Data **56**
Technical Data Downflow Units X Type - 1 **57**
Performance Data 57
Noise Data 59
DF15X - DF31X 60
DF35X - DF45X 62
DF50X2 - DF60X2 64
Technical Data Upflow Units X Type - 1 **66**
Performance Data 66
Noise Data 70
V15X - V17X 72
V28X - V31X2 74
V35X - V35X2 76
V40X - V45X2 78
V50X2 - V60X2 80
Technical Data Downflow Units WX Type - 1 **82**
Performance Data 82
Noise Data 83
DF15WX - DF31WX 84
DF35WX - DF45WX 86
DF50WX2 - DF60WX2 88
Technical Data Upflow Units WX Type - 1 **90**
Performance Data 90
Noise Data 92
V15WX - V17WX 94
V28WX - V31WX2 96
V35WX - V35WX2 98
V40WX - V45WX2 100
V50WX2 - V60WX2 102
Technical Data Downflow Units X Type - 2 **104**
Performance Data 104
Noise Data 108
DF8X - DF10X 110
DF13X - DF17X 112
DF20X2 - DF22X2 114
DF28X - DF31X 116
DF35X - DF45X 118
DF50X2 - DF60X2 120
Technical Data Upflow Units X Type - 2 **122**
Performance Data 122
Noise Data 126
V8X - V10X 128
V13X - V17X 130
V20X2 - V26X2 132
V28X - V31X2 134
V35X - V35X2 136
V40X - V45X2 138
V50X2 - V60X2 140

Technical Data Downflow Units WX Type - 2 **142**
Performance Data 142
Noise Data 144
DF8WX - DF10WX 146
DF13WX - DF17WX 148
DF20WX2 - DF26WX2 150
DF28WX - DF31WX 152
DF35WX - DF45WX 154
DF50WX2 - DF60WX2 156
Technical Data Upflow Units WX Type - 2 **158**
Performance Data 158
Noise Data 160
V8WX - V10WX 162
V13WX - V17WX 164
V20WX2 - V26WX2 166
V28WX - V31WX2 168
V35WX - V35WX2 170
V40WX - V45WX2 172
V50WX2 - V60WX2 174
General Description **176**
Nomenclature 176
Introduction 176
Fan & Motor Assembly 178
Refrigeration 178
Electrical 178
Head Pressure Control (Variable) 178
Electronically Commutated (EC) Fan Motor 179
Installation Data **180**
Dimensions / Weights / Positioning - Horizontal 180
Dimensions / Weights / Positioning - Vertical 181
Unit Lifting - Condenser 182
Technical Data **183**
Performance Data 183
Mechanical Data 185
Electrical Data -1 187
Electrical Data -2 189
Noise Data - Horizontal 191
Noise Data - Vertical 192
Fan Data **194**
Calculating Total Static Pressure 194
Fan Speed Data 195
EZRE Direct Expansion 380V 60Hz (-1) 196
EZRE Direct Expansion 380V 60Hz (-1) 198
EZRE Direct Expansion 220V 60Hz (-2) 203

Specifiers Guide

Nomenclature

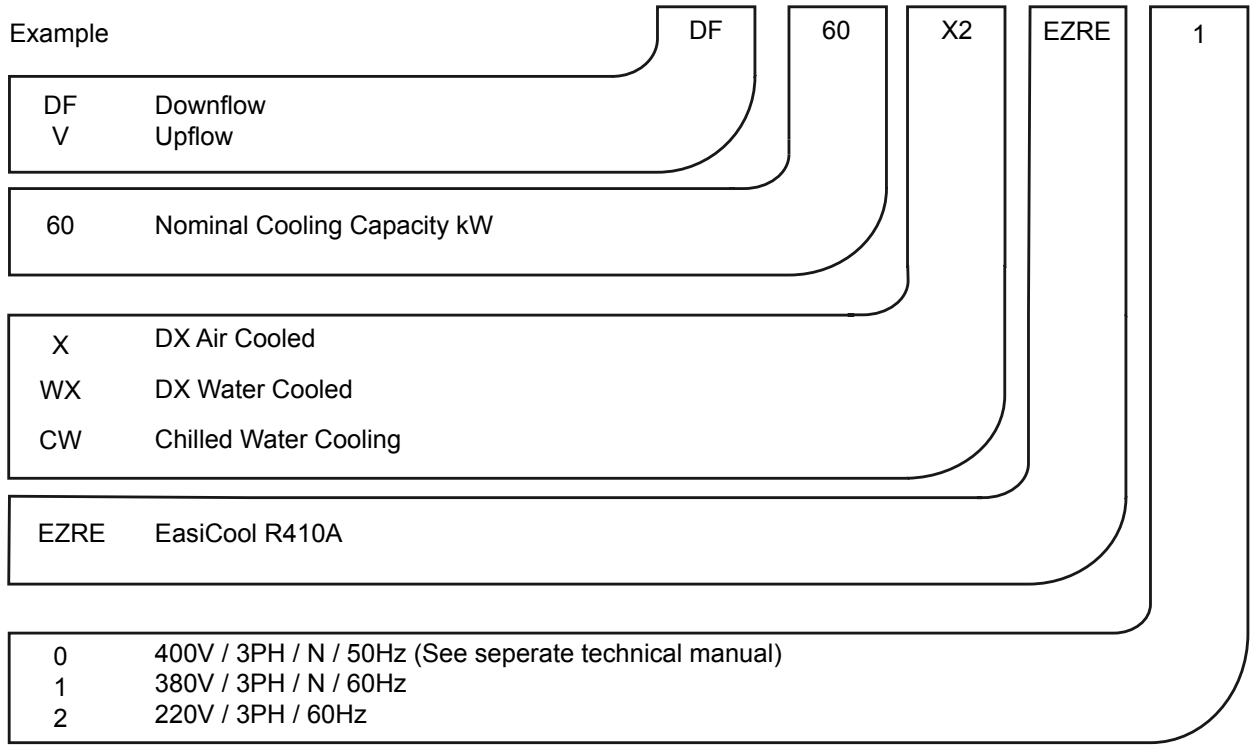

Introduction

Designed to provide environmental Precision Air Conditioning for applications such as Telecommunication Facilities, Computer Rooms, Data Centres, Clean Rooms and laboratories.

The EasiCool range comprises of:-
23 Models as direct expansion air cooled and 23 models as water cooled (covered in this document) (-1 range)
36 Models as direct expansion air cooled and 36 models as water cooled (covered in this document) (-2 range)
34 models as Single circuit chilled water. (seperate document).(-0,-1, and -2 range)
38 models as direct expansion air cooled and 38 models as water cooled (seperate document) (-0 range)

Full function units provide full control of cooling, humidification, de-humidification, heating and filtration.

The modular design of the EasiCool allows grouping of differing model types and capacities to be installed side by side. The flexibility of this type of installation provides for multi-circuit functionality.

A full range of air cooled condensers is available with the direct expansion indoor units to provide a matched system with optional performance upgrade.
Also available is a full range of Airedale water chillers to complement the chilled water indoor units.

The range has been designed and optimised for operation with ozone benign refrigerant R410A.

Unit Overview

Downflow

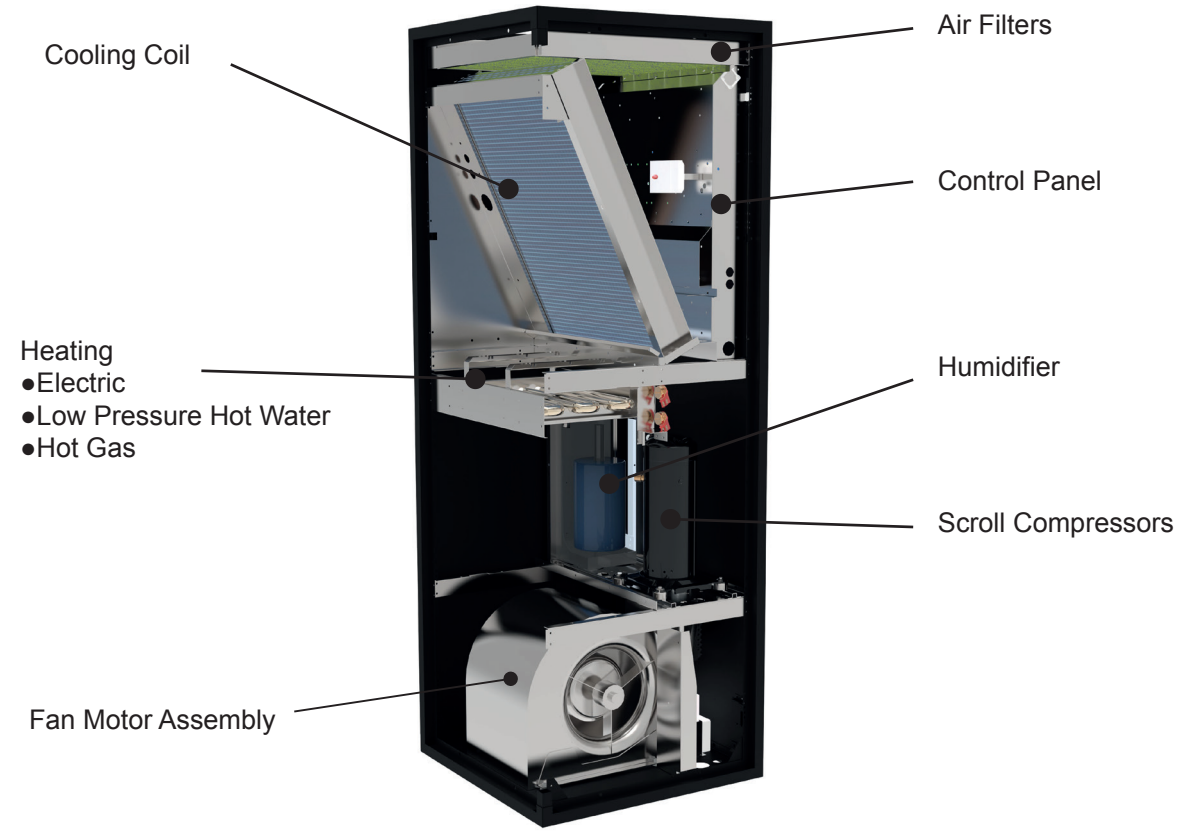

Upflow

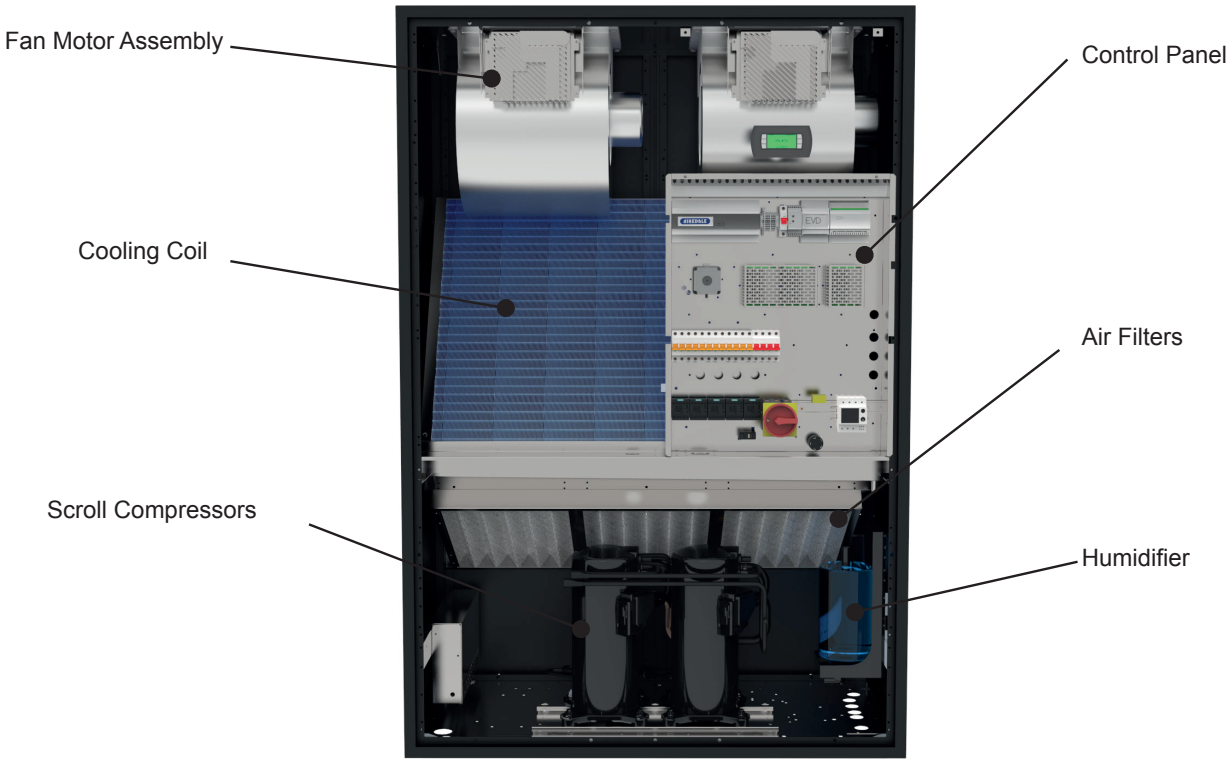

Construction

The cabinet comprises an black painted aluminium frame with black painted aluminium corners and removable galvanised sheet steel panels. The unit panels are manufactured from galvanised sheet steel coated with epoxy baked powder paint to provide a durable finish.

Standard unit colour is Black Grey (RAL 7021). Optional Light Grey (RAL 7035).

Cabinets are lined internally with fire resistant foam (UL94 V0) thermal and acoustic insulation:

- 30mm deep for removable panels
- 12mm deep for remaining internal surfaces

The cabinet doors are full height, hinged and key lock secured. The hinge arrangement allows flexible door opening / removal for improved access. Rubberised door seals reduce sound breakout and eradicate air leakage. For ease of maintenance, the control panel door may be safely opened while the unit is in operation.

Unit design incorporates a series of M6 fixings to the top and bottom face for connecting to customer ductwork, please contact Airedale for further details.

Sizes 8 - 26

Dependent upon model type, components such as the expansion valve, compressor, humidifier and sight glass are contained within an acoustically lined enclosure to minimise sound emission and ensure ease of maintenance.

Refrigeration Components

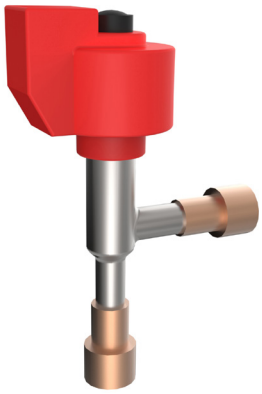

		System Configuration			
		Downflow		Upflow	
		X Type	WX Type	X Type	WX Type
Refrigeration	Scroll Compressor	●	●	●	●
	Evaporator Coil	●	●	●	●
	Refrigeration Sight Glass	●	●	●	●
	Oil Separator	○	○	○	○
	Liquid Line Solenoid Valve	○	○	○	○
	Refrigerant Pump down	○	○	○	○
	Hot Gas Reheat	○	–	○	–
	Suction Throttle Valve	○	○	○	○
	Plate Condenser	○	●	○	●
	Thermostatic Expansion Valve (TEV)	●	●	●	●
	Electronic expansion Valve (EEV)	○	○	○	○

● Standard Feature ○ Optional Feature – Not Available

Evaporator

Large surface area coil ideally positioned to optimise airflow and heat transfer, manufactured from refrigeration quality copper tube with mechanically bonded aluminium fins. The copper tube is internally rifled for improved heat transfer. Fins are coated with a non-stick acrylic film (hydrophilic) which provides additional corrosion protection and efficient surface water removal for improved performance.
The cooling coil is mounted over a full width stainless steel condensate tray.
Factory pressure tested to 45 Barg.

X Models Only Sweat copper pipe for brazed connection as standard.

Compressor

Compressor(s) are mounted on the base via the use of vibration isolators.

Each compressor is designed for use with R410A refrigerant.

Compressor Configurations		X	X2	WX	WX2
	Thermal Protection	●	●	●	●
	Single Compressor	●	—	●	—
	Tandem Compressors	—	●	—	●

● Standard Feature ○ Optional Feature – Not Available

Tandem Compressors

Comprising of 2 scroll type compressors linked together by refrigerant pipework to one common circuit.

Tandem compressors provide variable control of the system performance by activating individual compressors as required. Multiple steps of unloading allow external load demands to be met with greater precision, eliminating unnecessary temperature and humidity variations. Consequently, system efficiency and reliability are much improved by extending major component working hours.

X and WX Models

Utilise a single hermetic scroll compressor fitted as standard with:

- Thermal motor protection internal or external (dependent upon model size)
- High temperature discharge protection

X2 and WX2 Models

Utilise a tandem hermetic scroll compressor set, to provide 2 stages of control, fitted as standard with:

- Thermal motor protection internal or external (dependent upon model size)
- High temperature discharge protection
- Sight glass on common equalisation line

Refrigeration

Each refrigeration circuit features as standard:

X Type

- Externally Equalised Thermostatic Expansion Valve (TEV)
- Sight Glass
- Head Pressure Control
- Filter Drier
- Low Pressure Switch
- High pressure Switch
- Liquid Line Pressure Transducer
- Holding Charge of Inert Gas

WX Type

- Externally Equalised Thermostatic Expansion Valve (TEV)
- Sight Glass
- Head Pressure Control
- Filter Drier
- Low Pressure Switch
- High Pressure Switch
- Liquid Line Pressure Transducer
- Full operating charge of R410A
- Bleed valve
- Binder points

Head Pressure Control - Intelligent Modulation

(X Models)

The system is fitted with a voltage regulating fan speed controller which allows set point adjustment and system monitoring via the indoor unit microprocessor controller. A pressure transducer is fitted to the liquid line which in turn feeds back the head pressure to the microprocessor. The condenser fan speed can then modulate via the controller to provide optimum control under varying ambient conditions. The head pressure can be monitored via the display keypad. Units fitted with thermostatic expansion valves (TEV) have the head pressure factory set to 26 Barg (377 psig). Units fitted with optional electronic expansion valves (EEV) have the head pressure factory set to 22 Barg (319 psig). The head pressure can be monitored via the display keypad.

Low Noise Feature for Condenser Fan

(X Models)

Specifically designed for night time operation as optimum low noise levels are achieved with reduced ambient temperature and room loads, this feature is also ideal for outdoor noise critical applications such as residential areas. Initiated by setting the microprocessor programmable time clock, the head pressure set point changes from the standard 26 barg (377 psig) (TEV) or 22 barg (319 psig) (optional EEV) to 34 barg (493 psig), reducing the outdoor unit fan speed and corresponding operating sound levels.

Head Pressure Control - Intelligent Modulation

(WX Models)

A 3-way regulating valve, electronically actuated via the microprocessor, utilises a liquid line pressure transducer to measure and adjust head pressure. The valve will allow cooling water to flow to the condenser, to bypass the condenser, or to allow water flow to both condenser and by-pass line in order to maintain the correct refrigerant head pressure. The head pressure can be monitored via the display keypad.

Hot Gas Re-Heat (HGRH)

(X Models)

The HGRH system consists of a heating coil and solenoid valve(s) and can be fitted to units with humidification selected.

The microprocessor monitors the temperature and humidity setpoints and initiates HGRH to provide optimum system efficiency.

HGRH may be fitted instead of electric heating or low pressure hot water.

During dehumidification, the hot gas re-heat coil re-heats the cooled air from the evaporator coil using hot gas from the discharge line to maintain the room setpoint. Normally reheating of the air during dehumidification is performed by electric heating which requires additional power input. By utilising the available hot gas, the HGRH option does not require additional power input and is therefore far more energy efficient than electric heating.

Average Energy Input Comparison HGRH vs Electric Heat

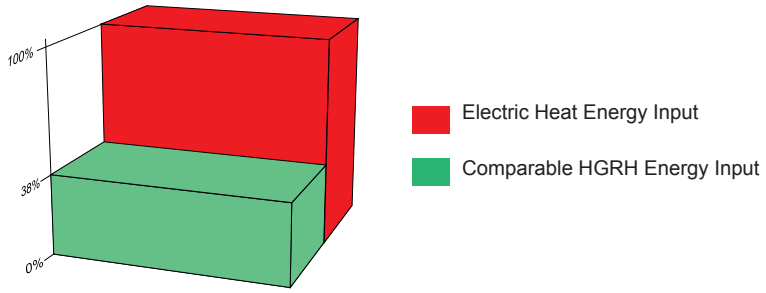

Suction Throttle Valve

The valve can be selected for units fitted with EEVs.

An electrically operated suction throttle valve can be fitted to provide accurate capacity control from 50% to 100% depending on the room load. Precise temperature control is obtained as a result of modulating the refrigerant flow in the evaporator by throttling the valve on the suction line.

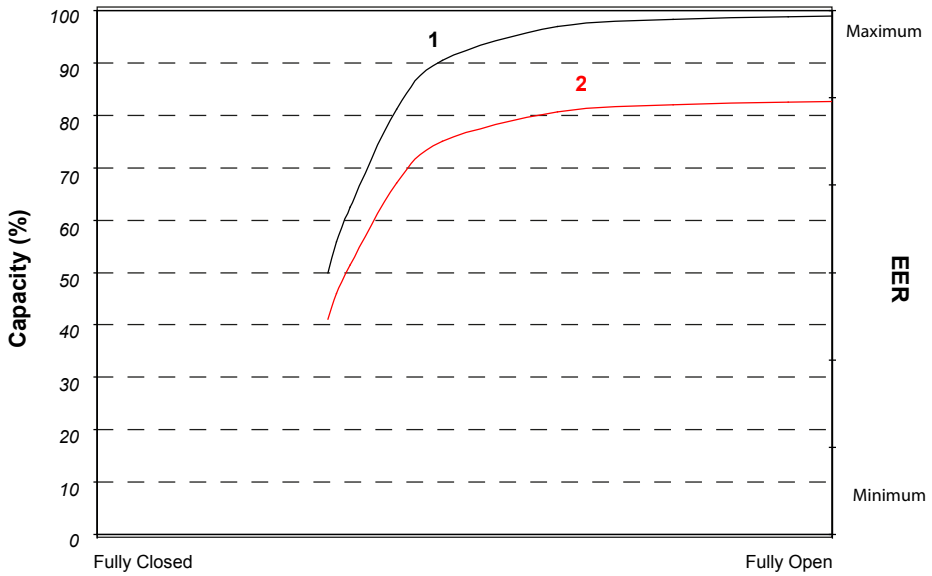

1 Capacity @ 24°C / 45% RH return air conditions

2 EER @ 24°C / 45% RH return air conditions

Electronic Expansion Valves (EEV)

Electronic expansion valves differ to the normal thermostatic expansion valves in their ability to maintain control of the suction superheat at reduced head pressures. This can lead to significant energy savings particularly at reduced loading and low ambient temperatures.

EEV step position, superheat setpoint, head pressure set point and other features can be viewed and adjusted via the microprocessor display.

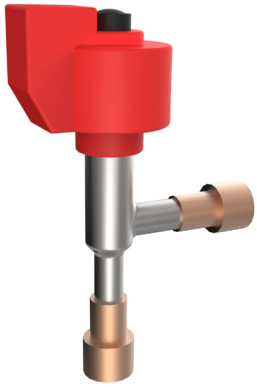

Whilst offering versatile control at the full design duty of the unit, TEVs do not automatically optimise themselves to all operating conditions. Therefore, if the refrigeration system is operating at 40% or 50% of full load, especially at a lower ambient temperature than that for which the valve was sized, the conventional TEV must have the design head pressure available to ensure good refrigerant control. Maintaining an artificially high condensing pressure is normal in conventional systems.

Using an EEV allows for good refrigeration control whilst operating at part load and lower ambient conditions with a reduced condensing pressure. By fitting an EEV and adjusting the head pressure control setting an increase in the system EER (Energy Efficiency Ratio) of up to 30% can typically be seen. The Mollier diagram shown below helps to illustrate how this increase in efficiency is achieved.

EEV's differ to normal thermostatic expansion valves in their ability to maintain control of refrigerant flow and the suction superheat at reduced head pressures. The turn-down rate of a typical EEV is superior to that of it's thermostatic equivalent, such that a reduced optimum condensing pressure can be maintained at low compressor load. However low the load is on the compressor, from zero to 100%, there will not be a problem with turn down, even down to 10% of the valve's rated capacity.

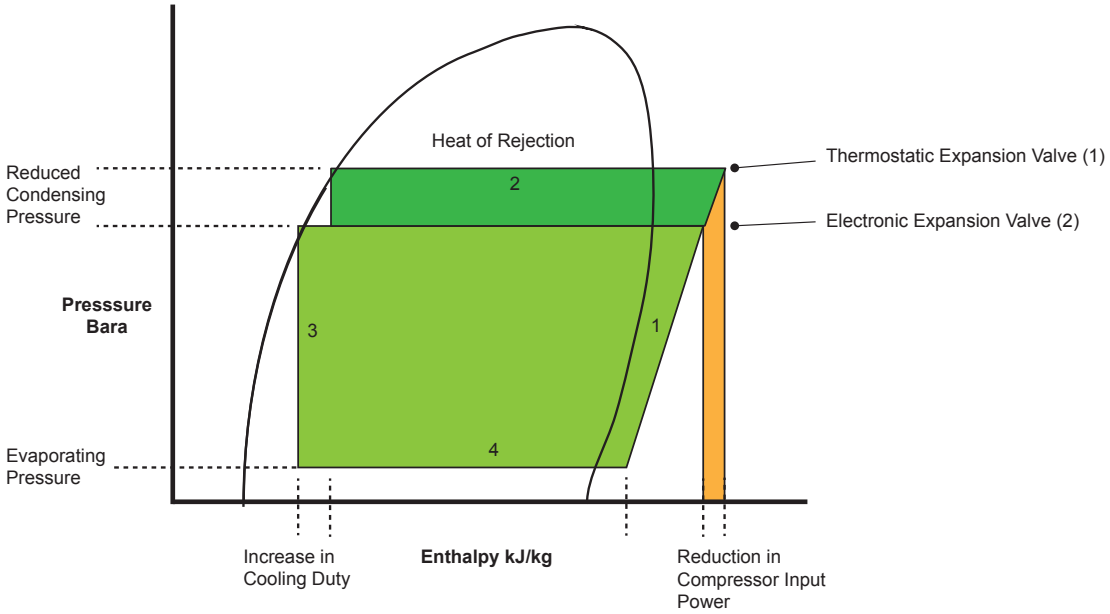

1	Compression	3	Expansion
2	Condensation	4	Evaporation

Key:
(1) Cooling Cycle @ 22°C ambient with a conventional TEV fitted.
(2) Cooling cycle @ 22°C ambient, demonstrating a typical EEV condensing temperature taking full advantage of lower ambient air temperatures (below 35°C).

Airflow Components

Pleated Disposable Panel Filter

EC Direct Drive Backward Curved Fan

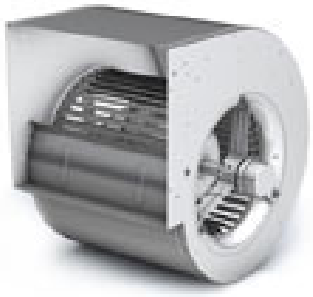

EC Direct Drive Forward Curved Fan

		System Configuration			
		Downflow		Upflow	
		X Type	WX Type	X Type	WX Type
Airflow Components	EC Forward Curved Direct Drive Fans 8 - 26	○	○	○	○
	AC Forward Curved Direct Drive Fans 8 - 26	●	●	●	●
	AC Forward Curved Belt and Pulley Fans 28 - 60	●	●	●	●
	EC Backward Curved Direct Drive Fans 28 - 60	○	○	○	○
	AC Larger Fan Motor**	○	○	○	○
	2 way Discharge Grille	–	–	○	○
	3 Way Discharge Grille	–	–	○	○
	Return Air Grille	–	–	●	●
	ISO-C-75 Return Air Filter	●	●	●	●
	Open Floorstand	○	○	○	○
	Enclosed Floorstand	○	○	○	○

● Standard Feature ○ Optional Feature – Not Available

** Model Dependant.

Sizes 8 - 26

(Direct Drive)

Units utilise a double inlet, forward curved, direct drive centrifugal fan with either an integral shaft mounted AC or EC motor (AC Standard) which is statically and dynamically balanced for quiet operation. Impellers and casings are galvanised for protection against corrosion. The integral motor runs in sealed for life, lubricated bearings and features automatic thermal overload protection.

Fan speed, airflow and external static pressure are controlled by the use of a 0-10 Volts signal via the microprocessor display keypad which offers easy on site adjustment. Adjustable by increments of 1% within + / - 10% of the set point.

Sizes 8 - 17

Units have a single fan and motor assembly.

Sizes 20 - 26

Units have dual fan and motor assembly.

Sizes 28 - 60

(Belt & Pulley)

Double inlet forward curved centrifugal fan(s) with galvanised impellers and casing. Mild steel fan shaft with lifetime lubricated ball bearings. Fan and drive assembly design is based on a minimum of 25,000 hours life expectancy.

Each fan assembly is separately driven by a high efficiency air cooled AC motor through a pulley and ‘V’ belt drive. The complete motor assembly is mounted on a fully adjustable platform for belt tensioning. Motor specification conforms to Efficiency Class 1(IE2) with integrated plummer block bearings (4kW motors only).

Sizes 28 - 45

Units have a single fan and motor assembly.

Sizes 50 - 60

Units have a dual fan and motor assembly. Larger AC fan motor options available on most sizes, refer to Mechanical Data.

Energy efficient backward curved EC fans are also available on all units.

Airflow Switch

An adjustable differential pressure switch activates a visual alarm at the status panel and breaks the power supply in the event of a fan or motor failure.

Filters

Pleated disposable panel filters in a rigid frame. Conform to ISO16890-ICE-C-75. Access and removal from unit front.

As standard the microprocessor provides an alarm following a preset run time limit being exceeded,

Fan & Motor Assembly Optional Features

Larger & Next Larger Fan Motor

(Belt and Pulley AC Fan Motors Only Sizes 28 to 60)
For applications where higher static air pressures are required, a larger fan and motor assembly size can be fitted to replace the standard assembly and is available on most models.

Electronically Commutated (EC) Fan Motor

Sizes 8 - 60

Backward curved impellers, direct drive centrifugal fan assemblies with integral rotor mounted motor which is statically and dynamically balanced for quiet operation.

Designed for high corrosion resistance, the impellers are laser welded aluminium with a galvanised rotor and die cast aluminium EC power module.

EC motors incorporate integrated electronics to convert AC power to DC for efficient and accurate speed control and are adjustable via the microprocessor display keypad.

The fans offer maximum airflow performance while keeping sound levels to a minimum.

On downflow units the fans are mounted within a floorstand complete with adjustable feet, optional legs and floor tile lip. (avaliable on all models)

Electronically Commutated (EC) Fan Motor Option

EC motors are DC motors with integrated AC to DC conversion; this gives the flexibility of connecting to AC mains with the efficiency and simple speed control of a DC motor. The EC fan offers significant power reduction in comparison with equivalent AC fan at both full and modulated fan speeds. The inbuilt EC fan control module allows for fan speed modulation from 15-100%, a standard AC fan's modulating range is typically 40 to 100% of full fan speed.

The EC fan presents superior energy efficiency at reduced fan speed compared to the equivalent AC fan motor.

Standard voltage regulated (VR) fan speed controllers offer a linear response. By comparison the EC fan is adjusted on demand via the unit microprocessor with precision, offering substantial energy savings.

The following illustration shows a comparison of the typical power input required by each method.

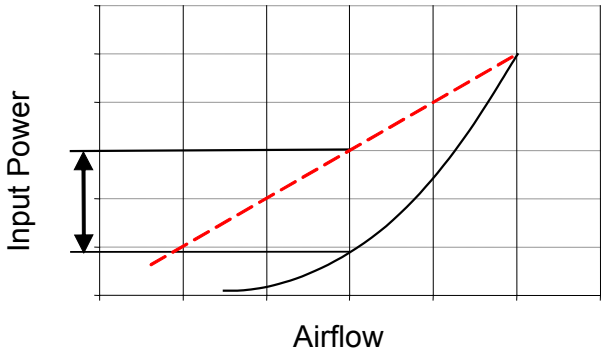

Key

EC (Electronically Commutated) Fan Speed Control

Regulated (VR) Fan Speed Control

Electrical Components

		System Configuration			
		Downflow		Upflow	
		X Type	WX Type	X Type	WX Type
Electrical	Electrical Switch Gear	●	●	●	●
	Door Interlocking Electric Isolator	●	●	●	●
	Energy Manager	○	○	○	○
	Phase Rotation Monitoring	○	○	○	○
	Thyristor Controlled Electric Heat	○	○	○	○

● Standard Feature ○ Optional Feature ━ Not Available

Electrical

The control panel contains the necessary compressor starter contactors, transformer, sub circuit protection, volt free contacts for a common alarm and mains and inter-connecting terminals. The panel is situated within the cabinet and can be removed for essential maintenance of other components within the unit. The electrical control panels are wired to the latest European standards and codes of practice.

Sub Fusing

The electrical mains supply for the system's outdoor unit is supplied via the indoor unit.
MCBs are fitted for protection.

Main Electric Isolator

To ensure complete unit isolation of the electrical panel during adjustment and maintenance a door interlocking isolator is provided as standard.

Energy Manager

Analysis of system energy consumption can be monitored via a dedicated LCD display. Unit parameters can be adjusted via the unit microprocessor control to affect energy usage in line with the system need.

Phase Rotation Protection

A phase sequence relay shall be avaliable for units containing 3 phase scroll compressors, to prevent possible damage by running the compressor the wrong direction.

Heating and Humidification

		System Configuration			
		Downflow		Upflow	
		X Type	WX Type	X Type	WX Type
Heating	Electric Heat	○	○	○	○
	Hot Gas Reheat	○	━	○	━
	Low Pressure Hot Water	○	○	○	○
Humidification	Humidifier	○	○	○	○
	Condensate Pump	○	○	○	○
	Low Conductivity (Soft Water) Bottle	○	○	○	○
	Standard Conductivity (Moderate/Hard Water) Bottle	○	○	○	○
	High Conductivity (Very Hard Water) Bottle	○	○	○	○
	Cleanable Humidifier Bottle	○	○	○	○

● Standard Feature ○ Optional Feature ━ Not Available

Heating

Hot Gas Re-Heat (HGRH)

(X Models) Refer to Hot Gas Re-Heat (HGRH).
Or

Electric Heating

Multi-stage finned electric heating elements complete with auto and manual reset overheat cut-out protection.

Electric Heating Thyristor Control

Offers precision control between 0 - 100% via the microprocessor.
Or

Low Pressure Hot Water

A low pressure hot water coil constructed of refrigeration quality copper tube and mechanically bonded aluminium fins can be factory fitted.
Frost protection is fitted to prevent freezing of the low pressure hot water coil assembly.
Proportional heating control is provided by a factory fitted 3 port, raise / lower type, modulating valve.
Access to the Right hand side of the unit is required to set up the regulating valve.

Humidifier - Intelligent Modulation

Humidification is provided by an electrode boiler. The sealed humidifier design ensures that only clean sterile steam is supplied to the conditioned area and corrosive salts and minerals are held in the disposable bottle. The steam is distributed through a sparge pipe fitted to the coil assembly.

Featuring modulating capacity output control as standard, the system provides continuous modulation of steam output in response to a proportional control signal. The output control range is 20%-100% of the humidifier rated value and is designed to give an approximate steam output of +/- 5% at 25°C at the sensor, thus ensuring precise control of the conditioned space.

The cylinder operating life time is automatically optimised via the integrated water conductivity sensor, which combined with the controls monitors and regulates the water refill cycle to reduce excessive salt deposits and the progressive wear of the cylinder.

All humidifier parameters and alarms are accessible and adjustable via the microprocessor display keypad unit, main features include:

- Supply water conductivity (µS/cm)
- Actual steam output (kg/h)
- Required steam output (kg/h)
- Actual current rating (A)
- Required current rating (A)
- Status mode (Start Up, Running, Filling, Draining)

Water Conductivity & Cylinder TypeConductivity is a measure of the ability of water to pass an electric current, measured in micro Siemens / centimetre (µS/cm). 3 different cylinders are available which correspond to the supply water conductivity.

Matching the correct cylinder type with the conductivity of the supply water ensures optimum performance and increases the life span of the cylinder.

1	Low Conductivity (Soft Water)	100 to 350 µS/cm
2	Standard Conductivity (Moderate/Hard Water)	350 to 750 µS/cm
3	High Conductivity (Very Hard Water)	750 to 1250 µS/cm

As standard the humidifier is fitted with the standard conductivity cylinder which covers the majority of water supplies. Where the water conductivity is known, please specify at order. For further details please contact Airedale.

CAUTION ⚠	The supply water pressure to the humidifier assembly must be between 1 - 8 barg.

Humidification

Control Principles

In a humidifier with electrodes, steam is produced by passing a current between electrode plates to generate heat. The higher the current being passed between the electrodes, the greater the quantity of steam that is produced.

To modulate the rate of steam production, this system varies the level of water within the cylinder, thereby increasing the immersion level of the electrodes and the current being passed between them. The more conducting area that is available to pass current between the electrodes, the larger the amount of steam that is produced.

Modulated by the controller, the water level is varied so that the level of steam being produced ensures that the room humidity set-point is continually maintained within a tight tolerance.

Optimised Lifetime

The life span of the Airedale humidification system is optimised by the inclusion of a water conductivity sensor into the bottle feed. This sensor determines the conductivity level of the supply water and by using an algorithm embedded in the software, determines the frequency that the bottle should be drained.

EXAMPLE:
(Optimised Lifetime with High Water Conductivity Supply)
As liquid water is boiled off into steam, mineral deposits are left in solution increasing the conductivity of the water. To counter this, the intelligent software increases the frequency of drain meaning that the replenishing supply water keeps the concentration of minerals diluted. By maintaining an acceptable mineral concentration, the bottle life span is maximised.

De-humidification

Sizes 8 - 26
(with Electric Heating and Humidification only)
Controlled by the microprocessor the de-humidification feature reduces fan speeds by 20% (adjustable). The reduction of fan speed increases de-humidification which means that the time taken to reduce the room humidity to the required level is drastically decreased, along with the energy required to do so.

The return temperature is monitored during de-humidification to ensure that the temperature does not fall to a critical level. If the temperature reaches the low limit de-humidification is cancelled until the return air temperature increases.

Controls

		System Configuration			
		Downflow		Upflow	
		X Type	WX Type	X Type	WX Type
Controls	Microprocessor Control	●	●	●	●
	Graphical Display	●	●	●	●
	Filter Change Monitoring	○	○	○	○
	Water Detection	○	○	○	○
	Fire / Smoke Detection	○	○	○	○

● Standard Feature ○ Optional Feature – Not Available

Units are fitted with the microprocessor controller which offers powerful analogue and digital control to meet a wide range of monitoring and control requirements. Includes a communication port plus networking and BMS connections.
An 8 x 22 character, white backlit LCD door mounted display keypad assembly is used to view the unit status and allow operator adjustment. Using a combination of text and standard Icons, the unit display is easy to read and interpret.

The standard display keypad visually displays operating alarms by flashing the relevant icon, however, as an optional extra; a display keypad with audible alarms is available.
The default screen shows the unit status and room condition (°C/RH %) without the need for interrogation and an easy to navigate menu structure for further interrogation and adjustment.

Standard Icons

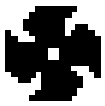
Fan Operating

Cooling - Up to 6 Stages

Heating - Up to 2 Stages

De-humidification

Humidification - Variable

Controls

Temperature Control

A temperature sensor is mounted in the return air with an option for a humidity sensor on full function units.

The temperature sensor is a NTC type thermistor accurate up to +/- 0.5°C and the humidity sensor accurate to +/- 5% RH at 25°C at the sensor.

The microprocessor senses the return air conditions and maintains the return air temperature and humidity conditions by controlling cooling, heating, humidification and dehumidification outputs accordingly.

Monitoring

The microprocessor monitors and displays the following values:

- Return Air Temperature
- Return Air Humidity (Optional on Full Function units)
- Condensing Pressure (Optional on DX units only)
- Coil Temperature Sensor (Indoor)

The maintenance of key components such as compressors and air filters can be monitored via a service indicator which visually demonstrates the status relative to the component service intervals.

Alarm Log

The controller logs and allows viewing of the last 100 conditions recorded in descending chronological order through the keypad display.

The standard display keypad visually displays operating alarms, however, as an optional extra, a display keypad with audible alarms is available.

Modbus/Carel BMS Connection

The Airedale controllers shall be able to communicate directly using the Modbus® protocol.

The Modbus® card shall be a small PCB (60mm x 30mm), which can be plugged into the controller to provide it with the following protocol support

Modbus® - JBus slave
RTU mode (Remote Terminal Unit) with 8 bit encoding and error handling using 16 bit CRC
Communication standard connection options of RS485 (multipoint) or RS232 (point-point)
Maximum Baud Rate of 19200. The data communication shall be asynchronous serial, 8 data bits, 2 stop bits and no parity (in total 11 bits/datum).

The data/parameters from the controller shall be represented within Modbus® registers, each register containing information pertaining to temperatures, pressures, setpoint, status, etc and is available to the site integration company in a spreadsheet format.

Controls

Alarm Handling

An alarm will be generated under the following conditions and will be visually displayed through the alarm log. In addition, under certain conditions the relevant Icon will flash repeatedly as indicated below:

Sizes 8 - 26

- Return air temperature high limit
- Return air temperature low limit
- Return air humidity high limit (Optional on Full Function units)
- Return air humidity low limit (Optional on Full Function units)
- Frost protection low limit (LPHW option only)
- Low pressure trip (Optional on DX units only)
- Filter change alarm
- Manual override
- Common alarm
- Power fail reset
- Communications failure
- Maintenance - fan and compressor (once hours run limit exceeded)
- Airflow failure ( )
- Compressor failure (Optional on DX units only) ( )
- Electric Heating Overheat cut-out ( )
- Humidifier alarm (Full Function units only) ( )

Sizes 28 - 60

- Return air temperature high limit
- Return air temperature low limit
- Return air humidity high limit (Optional on Full Function units)
- Return air humidity low limit (Optional on Full Function units)
- Frost protection low limit (LPHW option only)
- Low pressure trip (Optional on DX units only)
- Filter change alarm
- Manual override
- Common alarm
- Power fail reset
- Communications failure
- Maintenance - fan and compressor (once hours run limit exceeded)
- Fire
- Flood
- Phase Failure
- Critical
- Non-critical
- Airflow failure ( )
- Compressor failure (Optional on DX units only) ( )
- Electric Heating Overheat cut-out ( )
- Humidifier alarm (Full Function units only) ( )

Controls

Standard Features

Password Protection
The control system integrity can be maintained by restricting access with a password PIN number.

CAUTION
IMPORTANT: To change the PIN number, please contact Airedale at time of order with the preferred 4 digit number.

Remote On/Off
Terminals for interlocking are provided to enable or disable the unit remotely.

Fire Shut Down
Terminals for interlocking are provided to shut down the unit in the event of fire.

Compressor Anti-Cycle Control
Programmed to provide automatic anti-cycling delays of up to 10 starts per hour with a minimum off time of 3 minutes.

Compressor Rotation
On tandem compressor units the controller is programmed to provide automatic compressor rotation to ensure equal compressor running times. In the event of a compressor fault on networked systems the controller is programmed to automatically select the next compressor in order of running hours.

Compressor Hours Run Log & Reset
Allows the user to monitor the running times of each compressor and reset after maintenance.

Hours run log or visual service indicator provided.

Evaporator Fan Hours Run Log & Reset
Allows the user to monitor the running times of the evaporator fans and reset after maintenance. Hours run log or visual service indicator provided.

Head Pressure Control and Condenser Fan Speed Controller
Each refrigerant circuit (TEV or EEV) is fitted with condenser pressure transducers and a modulating condenser fan speed controller to allow the designed head pressure to be monitored and maintained under varying ambient conditions. Condenser fan speed control settings are input via the display keypad.

Evaporator Fan Speed Controller
(Sizes 8 - 26) Evaporator fan speed control is easily set via the display keypad and can be incrementally increased or decreased to meet on site airflow and external static pressure requirements.

Filter Change Alarm
Filter change is managed by the AireTronix software, and is based on fan(s) hours run with an alarm being generated when the pre-set run time limit has been exceeded. The set-point value can be adjusted to suit each application and is factory set to 4000 hours. Hours run log or visual service indicator provided.

LPHW Frost Protection
(DX units with LPHW option)
The coil temperature sensor is mounted on the DX coil and has a fixed 3°C low limit setting to disable DX cooling.

Controls

Standard Network Features

As standard the AireTronix controller is capable of the providing a platform for the following and can be enabled on request for 2 to 8 units, please specify at order.

Networking

A Local Area Network (LAN) can be used to connect up to 8 units to offer intercommunication and Duty/Standby control. This also allows the connection of computers, printers and modems on the same communications ring.
For further details, please contact Airedale Controls.

CAUTION

When adding to an existing network, please consult Airedale to ensure strategy compatibility.

Duty/Standby Operation

The controller enables units to operate in run/standby mode, with up to 6 units networked together, without the need for additional hardware or controllers. Standby units can be configured to start when the run unit has a critical alarm and/or a high/low return air temperature alarm.
During peak demand, the standby units can temperature assist.

Duty Rotation

Networked units can be configured to duty rotate, providing equal hours run of fans and compressors.

OPTIONAL EXTRAS

Audible Alarm

The display keypad can be upgraded to include audible alerts.

BMS Interface Card

Enables Controlled units to be interfaced with most BMS, factory fitted, please contact Airedale.

A wide range of protocols can be accommodated through the use of interface devices. Available as a standard option are: ModBus/Jbus, Carel and Trend.

For interfaces such as SNMP, LonWorks, Metasys and BACnet, please contact Airedale.

Also available is Airedale's own supervisory plug-in BMS card pCOWEB.

Based on Ethernet TCP/IP secure technology with SNMP features.

Requires no proprietary cabling or monitoring software and supplied pre programmed with an IP address for ease of set up.

Water Detector

Two methods are available:

1 A solid state (probe) sensor is supplied loose for remote mounting on site
2 Tape suitable for sensing water droplets is supplied loose for remote mounting on site. Standard tape length 10m (supplied loose)

Smoke Detector

Supplied loose for remote mounting to shut down the unit and activate the alarm upon sensing the presence of smoke.

Firestat

Installed in the return air stream to shut down the unit in the event of an unusually high return air temperature.

General Features

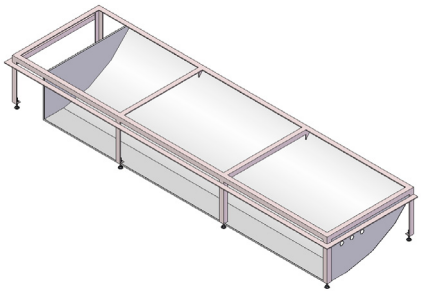

		System Configuration			
		Downflow		Upflow	
		X Type	WX Type	X Type	WX Type
	Secure Door Locks	●	●	●	●
	Return Air Grille	━	━	●	●
	Condensate Pump	○	○	○	○
	Open Floorstand	○	○	○	○
	Enclosed Floorstand	○	○	○	○
	Ceiling Duct Extension	○	○	○	○

● Standard Feature ○ Optional Feature ━ Not Available

Open & Enclosed Floorstand

Open or enclosed floorstands are available, complete with adjustable feet and floor tile lip. Enclosed floorstands incorporate an air turning vane. Height of the floorstand; please specify at order.

Discharge Air Configuration

Standard configuration is forward air discharge. Reverse air discharge is available, please specify at order.

Ceiling Duct Extension

Straight and 'L' shaped duct extensions up to a height of 1350 mm constructed and finished to match the unit are available.

For extensions greater than 1350 mm, please contact Airedale. Height; please specify at order.

Services Side Access Gland Plate

As standard services can be routed through the gland plate in the base of the units. A gland plate can be optionally located to the lower left hand side face of the unit, if required.

Plain Doors - No Display Keypad

Networking is a standard option of the AireTronix microprocessor; refer to Controls, for full details. To reduce costs, the "slave" units can be supplied with plain doors (no display keypad), in all door types, please specify at order.

Threaded Water Pipe Connection

As an alternative to brazed water pipe connections, BSP brass male taper threaded connections can be factory fitted.

Sterling Board LAT (Wooden Case) Packing

Units shall be supplied complete with additional LAT corner protection and cross braces to afford extra transit protection. Sterling board heat treated man made material shall be used (including pallet) to comply with phytosanity import regulations (please contact Airedale for this option).

Condensate Pump

The following graphs illustrate the total static (head) pressure available. The system horizontal pipe losses and vertical lift should be factored in when calculating the condensate pump performance.

6 - 26

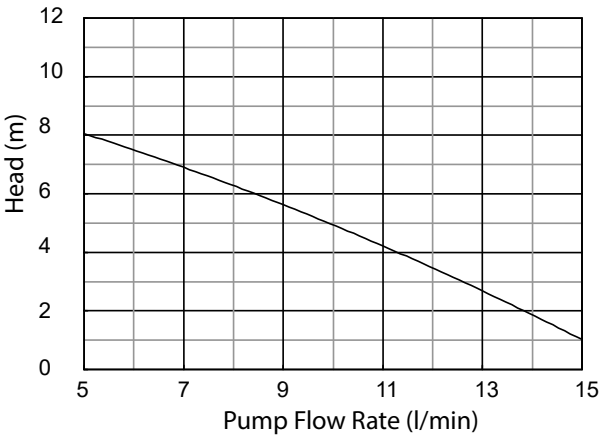

Sizes 6 - 26

The condensate pump has a 3 litre reservoir with a capacity of 5 l/m at a head of 8m and is mounted in the unit base.

28-60

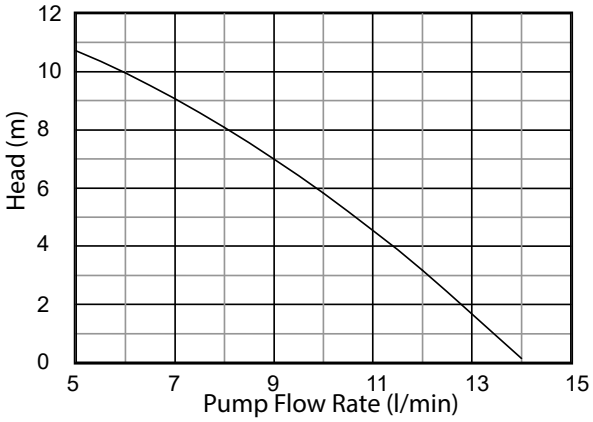

Sizes 28 - 60

The condensate pump has a 6 litre reservoir with a capacity of 5 l/m at a head of 10.8m and is mounted in the unit base.

IMPORTANT ⚠	Use only 10mm (3/8”) copper tube when connecting the discharge stub to the condensate pump. The discharge line from the pump should rise no more than 6 meters vertically and no more than 8 metres in total length before being interrupted with a swan neck air break and tundish.

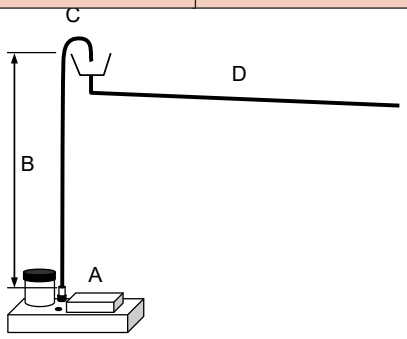

A Condensate Pump

B Condensate pump discharge line; 10mm (3/8”) copper tube; maximum vertical run 6m, maximum TOTAL run 8m

C Swan Neck with Tundish

D Drain line from Tundish, > 10mm (3/8”) tube **(MUST BE copper tube when coupled with humidifier drain)**, minimum fall 1 : 20

Sound Measurement Method

Measurement Of Sound Power

All sound data quoted has been measured in the third-octave band limited values, using a Real Time Analyser calibrated sound intensity meter in accordance with BS EN ISO9614 Part 1 : 2006

All Sound Power Levels quoted are calculated from measured sound intensity according to BS EN ISO9614 Part 1:2006.

SEMI HEMISPHERICAL

Sound Pressure Levels are calculated from sound power using the semi-hemispherical method where the noise source is in junction with 2 boundaries i.e. the floor and 1 wall.

FREE FIELD

For comparison, the semi hemispherical figures can typically be reduced by 3dB to provide free field conditions.

IMPORTANT

The sound data quoted is based on the unit having a ducted return air, ducted (or underfloor) discharge air and standard forward curved fan and EC motors fitted, refer to illustration below.

Case breakout sound data is therefore independent of the discharge air and return air sound data.

For non-ducted return air applications, the overall case breakout sound levels may increase, due to the return air sound being predominant.
Within the conditioned space, sound from in-room ducted discharge air grilles and other equipment will contribute to the overall sound level and should therefore be considered as part of sound calculations.

Specialist acoustic advice is recommended for noise critical applications.

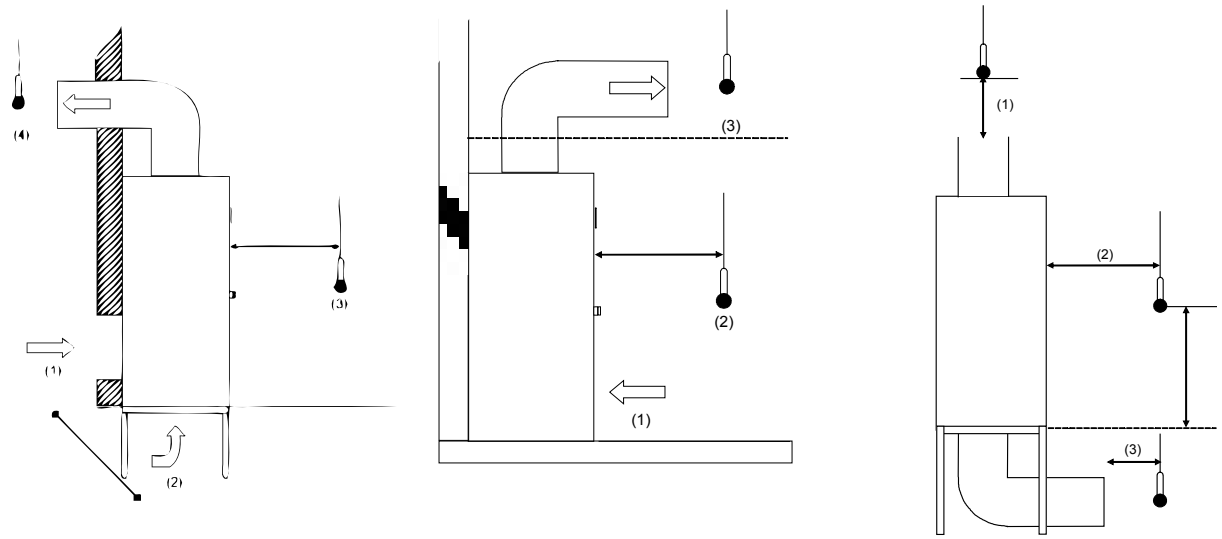

(1) Return Air
(2) Case Breakout
(3) Discharge Air

Dimensional & Installation Data

Dimensions

DF8 - DF26 - Standard Airflow Configuration (mm) with Standard EC Fan Motors

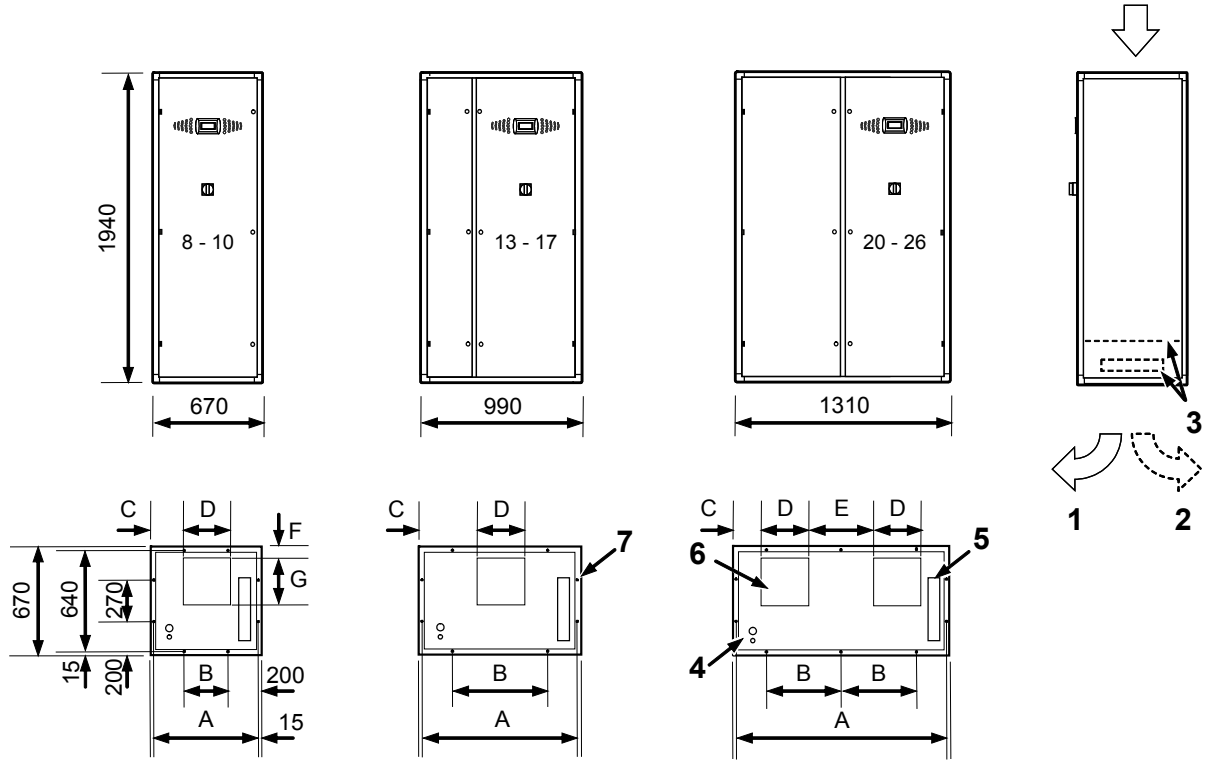

			H x D x W	A	B	C	D	E	F	G
DF8	**X/WX**	mm	1940 x 670 x 670	640	270	183	304	N/A	50	268
DF10	**X/WX**	mm	1940 x 670 x 670	640	270	167	337	N/A	50	295
DF13	**X/WX**	mm	1940 x 670 x 990	960	590	326	337	N/A	50	295
DF15	**X/WX**	mm	1940 x 670 x 990	960	590	294	401	N/A	50	347
DF17	**X/WX**	mm	1940 x 670 x 990	960	590	294	401	N/A	50	347
DF20	**X2/WX2**	mm	1940 x 670 x 1310	1280	455	166	337	303	50	295
DF22	**X2/WX2**	mm	1940 x 670 x 1310	1280	455	166	337	303	50	295
DF26	**X2/WX2**	mm	1940 x 670 x 1310	1280	455	166	337	303	50	295

(1) Standard forward airflow direction.
(2) Optional reverse airflow direction.
(3) Optional gland plate and panel for side services access via the right side of unit. For services details contact Airedale.
(4) Base mains cable entry.
(5) Standard base gland plate entry for refrigeration/water services. For services details contact Airedale.
(6) Shaded area denotes fan discharge aperture. Optional EC fan motor discharge aperture provided with protective mesh, not shown.
(7) M6 fixing hole positions.
(8) Units fitted with optional EC fan motors require a floorstand.

Dimensional & Installation Data

Dimensions

DF28 - DF60 - Standard Airflow Configuration (mm) with Standard AC Fan Motors

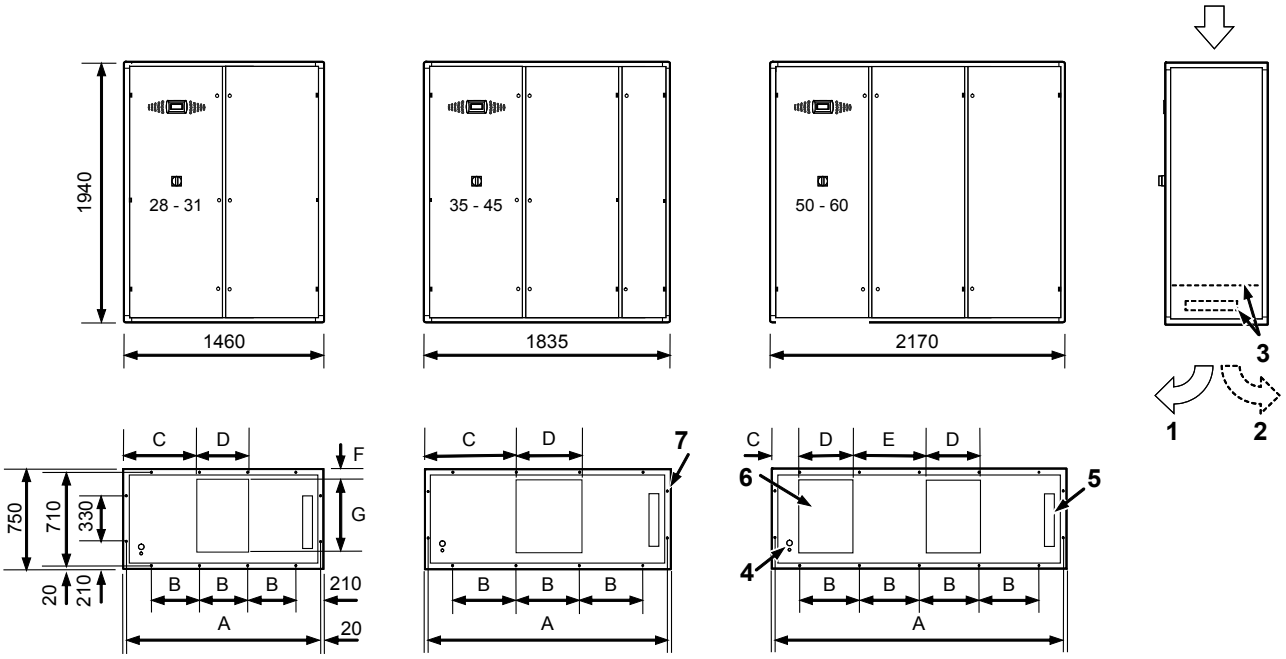

			H x D x W	A	B	C(8)	D(8)	E	F(9)	G(8)
DF28	X/WX	mm	1940 x 750 x 1460	1420	347	540	379	N/A	91 (113)	546
DF31	X/WX	mm	1940 x 750 x 1460	1420	347	540	379	N/A	91 (113)	546
DF35	X/WX	mm	1940 x 750 x 1835	1795	472	679	477	N/A	91 (113)	546
DF40	X/WX	mm	1940 x 750 x 1835	1795	472	679	477	N/A	91 (113)	546
DF45	X/WX	mm	1940 x 750 x 1835	1795	472	679	477	N/A	91 (113)	546
DF50	X2/WX2	mm	1940 x 750 x 2170	2130	438	206	401	543	76 (257)	345
DF55	X2/WX2	mm	1940 x 750 x 2170	2130	438	206	401	543	76 (257)	345
DF60	X2/WX2	mm	1940 x 750 x 2170	2130	438	206	401	543	76 (257)	345

(1) Standard forward airflow direction.
(2) Optional reverse airflow direction.
(3) Optional gland plate and panel for side services access via the right side of unit. For services details contact Airedale.
(4) Base mains cable entry.
(5) Standard base gland plate entry for refrigeration/water services. For services details contact Airedale.
(6) Shaded area denotes fan discharge aperture. Optional EC fan motor discharge aperture provided with protective mesh, not shown.
(7) M6 fixing hole positions.
(8) Figures in brackets represent position of fan discharge aperture when larger AC fan motor option is fitted.
(9) Figures in brackets represent optional reverse air discharge configuration when fitted with standard AC fan motors.
(10) Units fitted with optional EC fan motors require a floorstand.

Dimensional & Installation Data

Dimensions

V8 - V26 - Standard Airflow Configuration (mm) with Standard EC Fan Motors

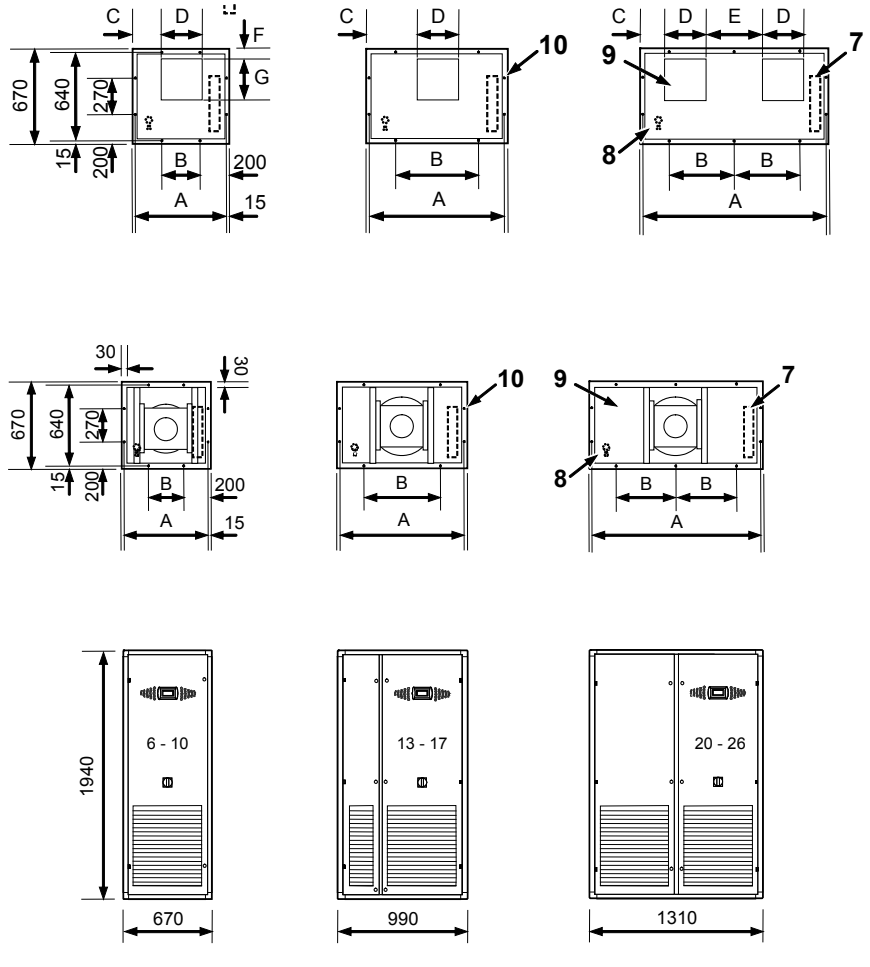

			H x D x W	A	B	C	D	E	F	G
V8	X/WX	mm	1940 x 670 x 670	640	270	183	304	N/A	50	268
V10	X/WX	mm	1940 x 670 x 670	640	270	167	337	N/A	50	295
V13	X/WX	mm	1940 x 670 x 990	960	590	387	337	N/A	50	295
V15	X/WX	mm	1940 x 670 x 990	960	590	355	401	N/A	50	347
V17	X/WX	mm	1940 x 670 x 990	960	590	355	401	N/A	50	347
V20	X2/WX2	mm	1940 x 670 x 1310	1280	455	166	337	303	50	295
V22	X2/WX2	mm	1940 x 670 x 1310	1280	455	166	337	303	50	295
V26	X2/WX2	mm	1940 x 670 x 1310	1280	455	166	337	303	50	295

(1) Standard forward airflow direction.
(2) Optional reverse airflow direction.
(3) Optional gland plate and panel for side services access via the right side of unit. For services details contact Airedale.
(4) Base mains cable entry.
(5) Standard base gland plate entry for refrigeration/water services. For services details contact Airedale.
(6) Shaded area denotes fan discharge aperture. Optional EC fan motor discharge aperture provided with protective mesh, not shown.
(7) M6 fixing hole positions.

Dimensional & Installation Data

Dimensions

V28 - V60 - Standard Airflow Configuration (mm) with Standard AC Fan Motors

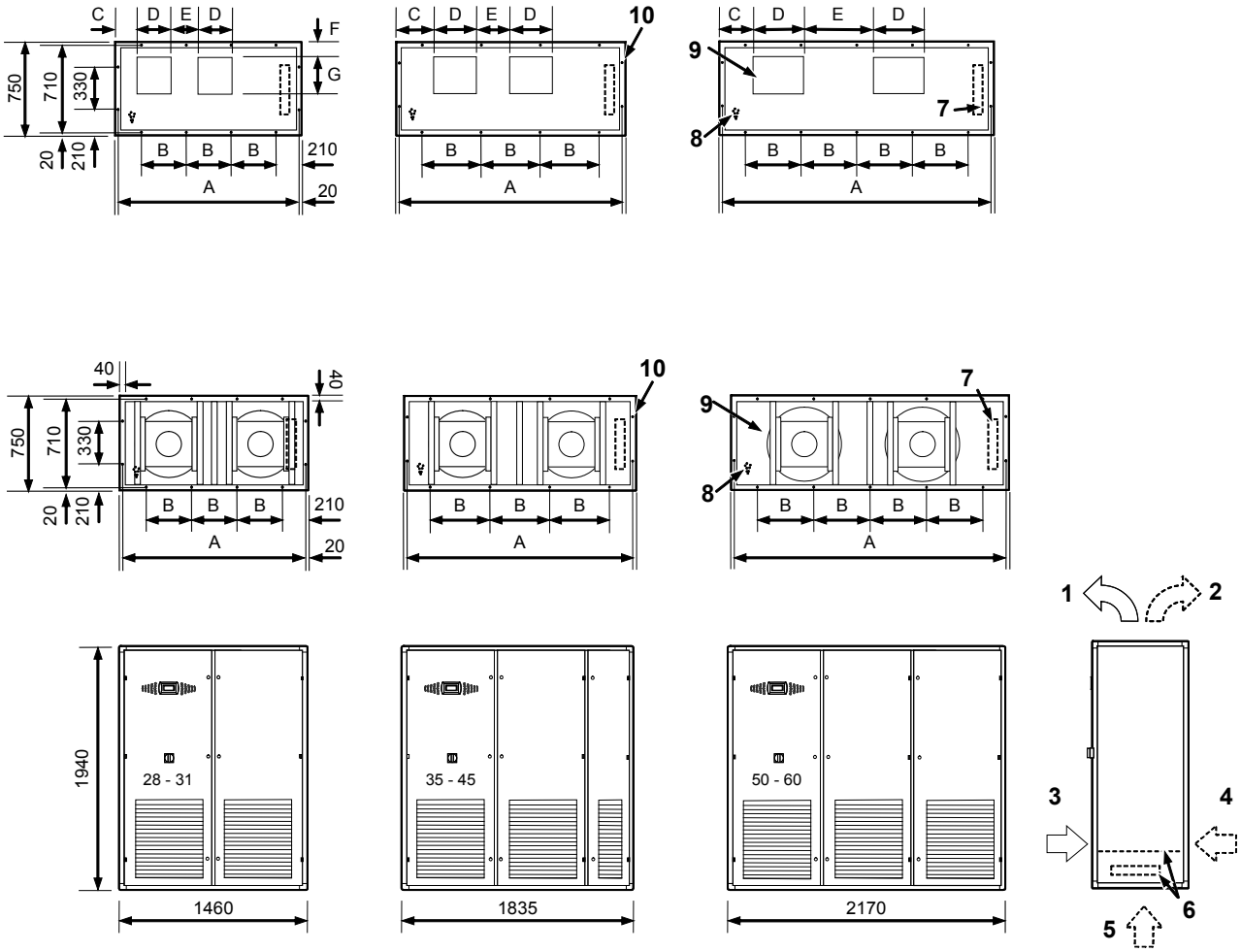

			H x D x W	A	B	C	D	E	F(8)	G
V28	X/X2/WX/WX2	mm	1940 x 750 x 1460	1420	347	175	271	208	123 (335)	292
V31	X/X2/WX/WX2	mm	1940 x 750 x 1460	1420	347	175	271	208	123 (335)	292
V35	X/X2/WX/WX2	mm	1940 x 750 x 1835	1795	472	304	337	258	123 (335)	292
V40	X/X2/WX/WX2	mm	1940 x 750 x 1835	1795	472	304	337	258	123 (335)	292
V45	X2/WX2	mm	1940 x 750 x 1835	1795	472	304	337	258	123 (335)	292
V50	X2/WX2	mm	1940 x 750 x 2170	2130	438	277	401	544	78 (327)	345
V55	X2/WX2	mm	1940 x 750 x 2170	2130	438	277	401	544	78 (327)	345
V60	X2/WX2	mm	1940 x 750 x 2170	2130	438	277	401	544	78 (327)	345

(1) Standard forward airflow direction.
(2) Optional reverse airflow direction.
(3) Optional gland plate and panel for side services access via the right side of unit. For services details contact Airedale.
(4) Base mains cable entry.
(5) Standard base gland plate entry for refrigeration/water services. For services details contact Airedale.
(6) Shaded area denotes fan discharge aperture. Optional Backwards curved EC fan motor discharge aperture provided with protective mesh, not shown.
(7) M6 fixing hole positions.
(8) Figures in brackets represent position of fan discharge aperture when larger AC fan motor option is fitted. (only on 28 - 60 units)

Dimensional & Installation Data

Upflow

Options

Discharge Air Plenum

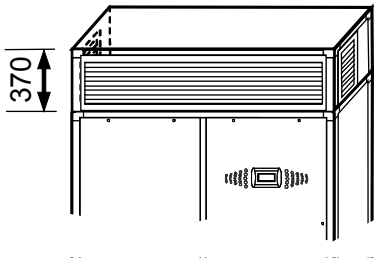

1 Discharge air plenum shows as 3 way, also available is front discharge only

Optional Rear Return Air Aperture (mm)

V8 - V26

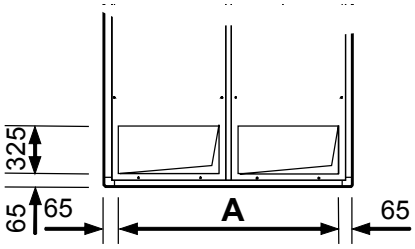

			A
V8	X/WX	mm	540
V10	X/WX	mm	540
V13	X/WX	mm	860
V15	X/WX	mm	860
V17	X/WX	mm	860
V20	X2/WX2	mm	1180
V22	X2/WX2	mm	1180
V26	X2/WX2	mm	1180

V28 - V60

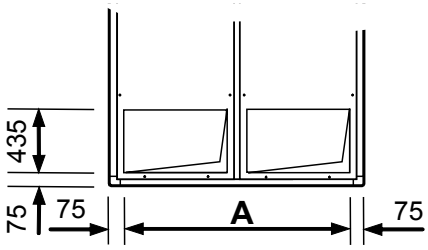

			A
V28	X/X2/WX/WX2	mm	1310
V31	X/X2/WX/WX2	mm	1310
V35	X/X2/WX/WX2	mm	1685
V40	X/X2/WX/WX2	mm	1685
V45	X2/WX2	mm	1685
V50	X2/WX2	mm	3020
V55	X2/WX2	mm	3020
V60	X2/WX2	mm	3020

1 25 mm flange required to return air duct work, supplied by others.
2 M6 fixings holes required.

Dimensional & Installation Data

Positioning

Down flow

Standard Return and Standard Fan Motors

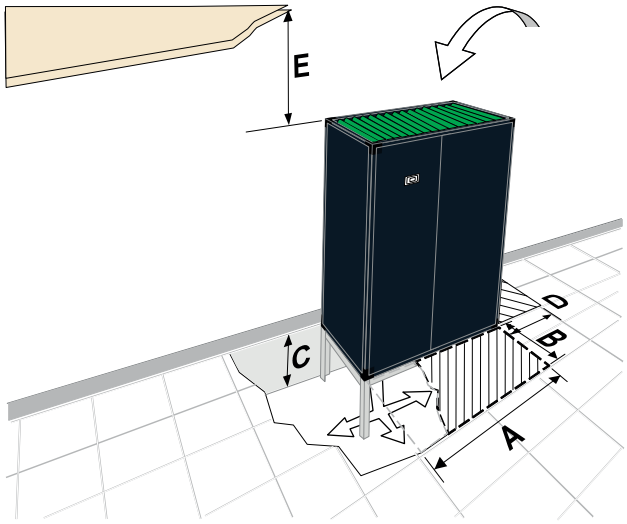

Standard Return and Optional Backward Curved EC Fan Motors

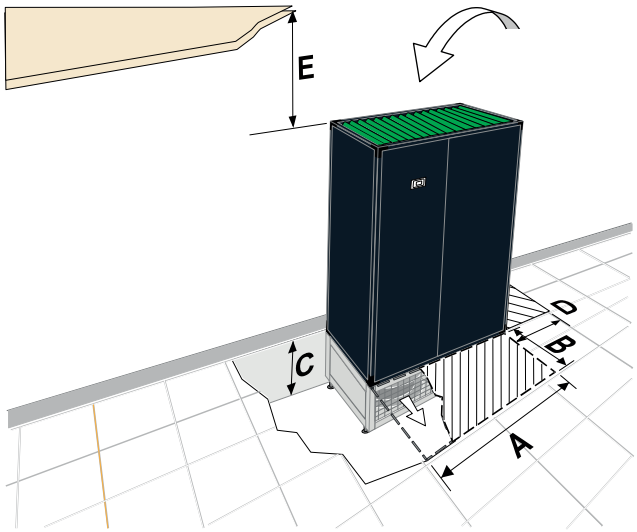

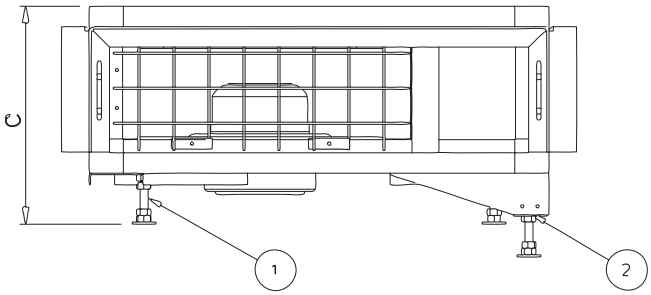

(1) With adjustable feet fitted
(2) With variable size leg and adjustable feet fitted

CAUTION ⚠	When placing the unit on the floorstand ensure appropriate air seal is used to prevent leakage at the join. It is also important to place all locking bolts in place to secure the unit to its base (EC fan floorstands only).

Dimensional & Installation Data

Minimum Unit Clearances

Open & Enclosed Floorstands Option

		A	B	C	D(4)
DF8 - DF10	mm	670	610	Floorstand(3)	Min 300
DF13 - DF17	mm	990	610	Min 200 - Max 750	Min 300
DF20 - DF26	mm	1310	610	(+ 50mm Feet Adjustable +/- 20mm)	Min 300
DF28 - DF31	mm	1460	700	Min 300 - Max 800	N/A
DF35 - DF45	mm	1835	700	(+ 50mm Feet	N/A
DF50 - DF60	mm	2170	700	Adjustable +/- 20mm)	N/A

Backward Curved EC Fan Motor Option

		A	B	C (3)				D(5)
				With Feet Only (4)		With Leg & Feet (4)		
				Min	Max	Min	Max	
DF8- DF10	mm	670	610	284	329	604	1074	Min 300
DF13 - DF17	mm	990	610	362	407	697	1152	Min 300
DF20 - DF26	mm	1310	610	362	407	697	1152	Min 300
DF28 - DF31	mm	1460	700	356	401	686	1146	Min 300
DF35 - DF45	mm	1835	700	356	401	686	1146	Min 300
DF50 - DF60	mm	2170	700	356	401	686	1146	Min 300

Minimum Ceiling Clearance

		E			
		Forward Only	Forward & 1 Side	Forward & 2 Sides	All Faces
DF8 - DF10	mm	470	240	160	120
DF13 - DF17	mm	550	330	240	170
DF20 - DF26	mm	560	370	280	190
DF28 - DF31	mm	620	410	310	210
DF35 - DF45	mm	640	450	350	230
DF50 - DF60	mm	640	480	380	240

(1) Shown with optional open floor stand.
(2) Shaded area indicates minimum service and maintenance requirements.
(3) Dimension C denotes recommended minimum/maximum floorstand height, refer to Airedale for special applications, please specify at order.
(4) Min = Threaded foot at minimum extension.
Max = Threaded foot at maximum extension.
(5) Dimension D refers to units fitted with LPHW which require access to the RHS of the unit to set up the regulating valve.
(6) SERVICES SIDE ACCESS GLAND PLATE, OPTIONAL POSITION; ensure appropriate clearance is available to the base of the RHS of the unit if this option is selected.

Dimensional & Installation Data

Positioning

Upflow

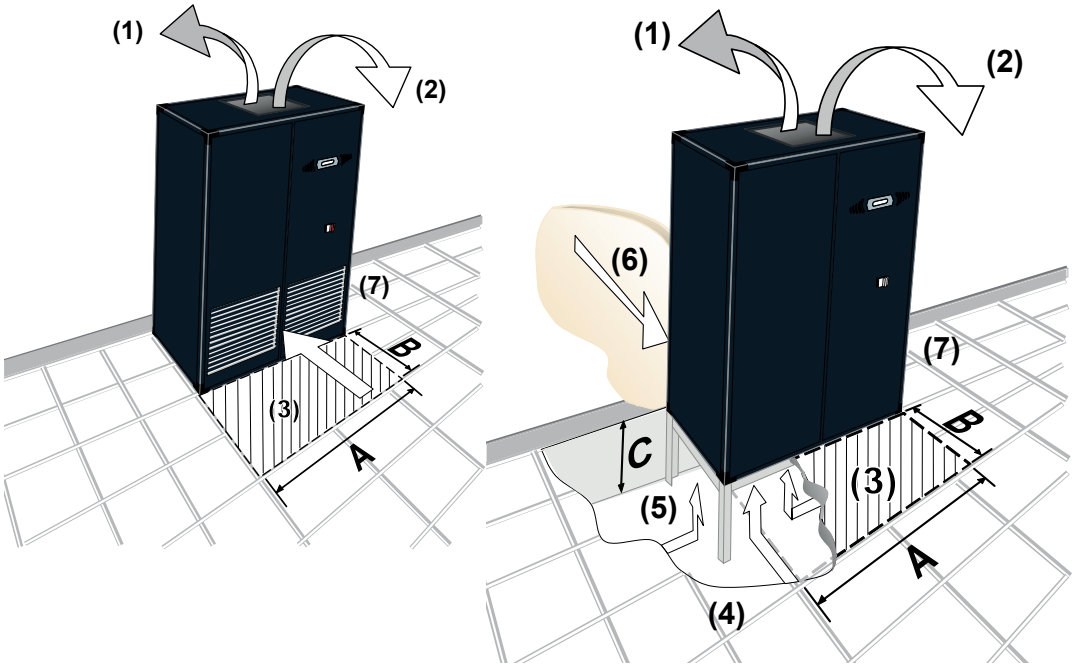

(1) Reversed discharge air.
(2) Forward discharge air.
(3) Shaded area indicates minimum service and maintenance requirements
(4) Shown with optional open floor stand.
(5) Optional base return.
(6) Optional rear return.
(7) SERVICES SIDE ACCESS GLAND PLATE, OPTIONAL POSITION; ensure appropriate clearance is available to the base of the RHS of the unit if this option is selected.

CAUTION ⚠	The unit is designed for use with either ducted discharge or a plenum. If neither is used, protection from rotating parts in the form of a grille must be used on the discharge air outlet. Placing objects near an unguarded fan may cause injury.

Minimum Unit Clearance

		A	B	C - Floorstand(3)
V8 - V10	mm	670	610	Min 200 - Max 750
V13 - V17	mm	990	610	(+ 50mm Feet
V20 - V26	mm	1310	610	Adjustable +/- 20mm)
V28 - V31	mm	1460	700	Min 300 - Max 800
V35 - V45	mm	1835	700	(+ 50mm Feet
V50 - V60	mm	2170	700	Adjustable +/- 20mm)

Dimensional & Installation Data

Weights

Downflow

		Standard Evaporator Fan - Fwd Motor		Optional Evaporator Fan - Bkwd Motor		
		Machine (AHU)[3]	Operating (AHU)	Machine (AHU)[3]	Operating (AHU)	Floorstand
DF8X	kg	195		179		26
DF10X	kg	199		187		26
DF13X	kg	217		206		29
DF15X	kg	241		213		29
DF17X	kg	242		214		29
DF20X2	kg	293		267		44
DF22X2	kg	293		267		44
DF26X2	kg	293		267		44
DF28X	kg	424		380		125
DF31X	kg	420.8		375		125
DF35X	kg	478.8		430		128
DF40X	kg	506.5		439		128
DF45X	kg	559.5		492		128
DF50X2	kg	641		562		190
DF55X2	kg	658		579		190
DF60X2	kg	658		573		190

		Standard Evaporator Fan - Fwd Motor		Optional Evaporator Fan - Bkwd Motor		
		Machine (AHU)[3]	Operating (AHU)	Machine (AHU)[3]	Operating (AHU)	Floorstand
DF8WX	kg	215	216	199	200	26
DF10WX	kg	218	219	206	207	26
DF13WX	kg	240	241	229	230	29
DF15WX	kg	271	273	243	245	29
DF17WX	kg	275	277	247	249	29
DF20WX2	kg	334	336	308	310	44
DF22WX2	kg	334	336	308	310	44
DF26WX2	kg	333	336	307	310	44
DF28WX	kg	480	486	436	442	125
DF31WX	kg	476.8	482.8	431	437	125
DF35WX	kg	538.8	544.8	490	496	128
DF40WX	kg	571.5	577.5	504	510	128
DF45WX	kg	646.5	656.5	579	589	128
DF50WX2	kg	732	742	653	663	190
DF55WX2	kg	751	761	672	682	190
DF60WX2	kg	751	761	666	676	190

(1) Weights quoted for units fitted with the standard Forward curved EC fan motor ***include*** the cooling fan weight within the unit cabinet (AHU).
(2) Weights quoted for units fitted with the optional Backward Curved EC fan motor ***exclude*** the cooling fan weight within the unit cabinet (AHU).
(3) Machine weight includes a refrigerant charge / Operating weight includes calculated water volume.

Dimensional & Installation Data

Weights

Upflow

		Standard Evaporator Fan - Fwd Motor		Optional Evaporator Fan - Bkwd Motor	
		Machine	Operating	Machine	Operating
V8X	kg	173		166	
V10X	kg	177		174	
V13X	kg	211		213	
V15X	kg	235		220	
V17X	kg	236		221	
V20X2	kg	289		285	
V22X2	kg	289		285	
V26X2	kg	289		285	
V28X	kg	422		415	
V28X2	kg	431		424	
V31X	kg	414		407	
V31X2	kg	447		440	
V35X	kg	476		465	
V35X2	kg	518		507	
V40X	kg	504		475	
V40X2	kg	532		503	
V45X2	kg	538		509	
V50X2	kg	639		609	
V55X2	kg	656		626	
V60X2	kg	660		630	

		Standard Evaporator Fan - Fwd Motor		Optional Evaporator Fan - Bkwd Motor	
		Machine	Operating	Machine	Operating
V8WX	kg	193	194	186	187
V10WX	kg	196	197	193	194
V13WX	kg	234	235	236	237
V15WX	kg	265	267	250	252
V17WX	kg	268	270	253	255
V20WX2	kg	326	328	322	324
V22WX2	kg	326	328	322	324
V26WX2	kg	325	328	321	324
V28WX	kg	478	484	471	477
V28WX2	kg	487	493	480	486
V31WX	kg	470	476	463	469
V31WX2	kg	502	508	495	501
V35WX	kg	536	542	525	531
V35WX2	kg	578	584	567	573
V40WX	kg	569	575	540	546
V40WX2	kg	596	602	567	573
V45WX2	kg	627	637	598	608
V50WX2	kg	729	739	699	709
V55WX2	kg	749	759	719	729
V60WX2	kg	753	763	723	733

(1) Weights quoted for units fitted with the standard forward curved EC fan motor ***include*** the cooling fan weight within the unit cabinet (AHU).
(2) Machine weight includes a refrigerant charge / Operating weight includes calculated water volume..

Installation

Refrigeration Pipework

Oil Traps

For long vertical rises in both liquid and discharge lines, it is essential that oil traps are located every 4m to ensure proper oil movement / entrapment. In addition there should be an oil trap at the exit of the air handling unit before a vertical riser is applied (refer to example below).

Pipe Supports

The following table identifies the maximum distance between pipe supports on vertical and horizontal pipe runs.

Pipe O/D (inches)	Support distance (m)
3/8 - 7/8	1.0
1 1/8 - 2 1/8	2.0

IMPORTANT ⚠	All pipework should be clamped prior to insulation being applied. Clamping over insulation is not acceptable.

Lines passing through walls

Refrigerant lines that rub against solid objects wear holes in the copper pipework and cause leaks, the lines must pass through sleeved openings in such a manner that the lines do not touch.

Horizontal Sections

It is good practice to ensure a slight gradient toward the compressor in the direction of the refrigerant flow for suction lines running horizontal. This assists oil return to the compressor. A gradient of approximately 1:200 (0.5%) shall be used.

Discharge Risers

Consideration must be taken when designing vertical risers. Refrigerant velocity must be ensured in vertical risers at a minimum of 8m/s.

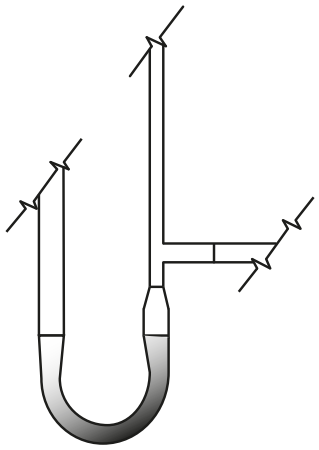

If required double risers must be designed into the system. Pipework must be sizes based upon a reduction in unit capacity as low as 30% of design.
The double riser must be sized so that the refrigerant still maintains adequate velocity for the oil to travel around the system.

At part load the velocity is reduced in the larger diameter pipe (and cannot carry oil). An oil trap is formed forcing vapour up the smaller tube which still has adequate velocity due to its size to continue carrying oil around the system.
The trap at the base of the riser must be as small as possible. This ensures that the trap causes a pressure drop causing vapour to pass up the smaller tube.

When the load increases the velocity of the refrigerant ensures that oil carries up both tubes.

CAUTION ⚠	Care must be taken in sizing double riser systems.

Installation

Liquid Line

If the system is configured with the EasiCool higher than the condenser unit it may be required to increase the degree of sub cooling to prevent flashing gas occurring in the liquid line. This flashing is due to excess pressure drop caused by the static head of liquid refrigerant and can results in poor operation of the evaporator and expansion device.

Careful pipe sizing is recommended to ensure that the liquid line does not have excessive pressure drop

Increasing the liquid line tube size can minimise pipe pressure drop.

However as a fail safe it is recommended that the condenser is installed above the indoor unit to allow for correct liquid drain.

Pipe Insulation

The liquid line of the system must be insulated if passing through extremely warm places (boiler houses etc). Ensuring that the refrigerant does not become flash gas.

Refrigerant Charging Guide

The following information can be used to estimate the refrigerant quantity required in a typical split system installation.

Unit Refrigerant Charge

(kg / Circuit)

The following information can be used to estimate the refrigerant quantity required in a typical split system installation. The table shows the refrigerant charge / circuit for the indoor and outdoor units.

Indoor Unit			Standard Condenser		Larger Condenser	
(IR)	kg/Circuit	HGRH kg/Circuit	(OR)	kg/Circuit	(OR)	kg/Circuit
DF8X-EZRE	1	1.1	CR16	2.7	CR22	2.2
DF10X-EZRE	1	1.1	CR16	2.7	CR22	2.2
DF13X-EZRE	1.5	1.7	CR22	2.2	CR30	4.3
DF15X-EZRE	1.5	1.7	CR22	2.2	CR30	4.3
DF17X-EZRE	1.5	1.7	CR30	4.3	CR50	4.9
DF20X2-EZRE	2.2	2.4	CR30	4.3	CR50	4.9
DF22X2-EZRE	2.2	2.4	CR50	4.9	CR65	9.8
DF26X2-EZRE	2.2	2.4	CR50	4.9	CR65	9.8
DF28X-EZRE	2.7	3	CR50	4.9	CR65	9.8
DF31X-EZRE	2.7	3	CR50	4.9	CR65	9.8
DF35X-EZRE	3.3	3.7	CR50	4.9	CR65	9.8
DF40X-EZRE	3.5	3.9	CR65	9.8	CR80	8.4
DF45X-EZRE	4.2	4.6	CR80	8.4	CR105	16.7
DF50X2-EZRE	4.5	5	CR80	8.4	CR105	16.7
DF55X2-EZRE	5.3	5.8	CR80	8.4	CR105	16.7
DF60X2-EZRE	5.4	5.9	CR80	8.4	CR105	16.7

Unit Refrigerant Charge

(kg / Circuit)

Indoor Unit			Standard Condenser		Larger Condenser	
(IR)	kg/Circuit	HGRH[1] kg/Circuit	(OR)	kg/Circuit	(OR)	kg/Circuit
V8X-EZRE	1	1.1	CR16	2.7	CR22	2.2
V10X-EZRE	1	1.1	CR16	2.7	CR22	2.2
V13X-EZRE	1.5	1.7	CR22	2.2	CR30	4.3
V15X-EZRE	1.5	1.7	CR22	2.2	CR30	4.3
V17X-EZRE	1.5	1.7	CR30	4.3	CR50	4.9
V20X2-EZRE	2.2	2.5	CR30	4.3	CR50	4.9
V22X2-EZRE	2.2	2.5	CR50	4.9	CR65	9.8
V26X2-EZRE	2.2	2.5	CR50	4.9	CR65	9.8
V28X-EZRE	2.7	3	CR50	4.9	CR65	9.8
V28X2-EZRE	2.6	2.9	CR50	4.9	CR65	9.8
V31X-EZRE	2.7	3	CR50	4.9	CR65	9.8
V31X2-EZRE	2.6	2.9	CR50	4.9	CR65	9.8
V35X-EZRE	3.3	3.7	CR50	4.9	CR65	9.8
V35X2-EZRE	3.3	3.7	CR50	4.9	CR65	9.8
V40X-EZRE	3.5	4	CR65	9.8	CR80	8.4
V40X2-EZRE	3.6	4.1	CR65	9.8	CR80	8.4
V45X2-EZRE	4.2	4.7	CR80	8.4	CR105	16.7
V50X2-EZRE	4.5	5.1	CR80	8.4	CR105	16.7
V55X2-EZRE	5.2	5.8	CR80	8.4	CR105	16.7
V60X2-EZRE	5.4	5.9	CR80	8.4	CR105	16.7

IMPORTANT ⚠	The pipe sizes/refrigerant charges quoted are for guidance only. It is the responsibility of the installing contractor/site engineer to check the pipe sizes/refrigerant charges are correct for each system installation and application. Split systems may require additional oil which should be added to the low side of each compressor. Design should be in accordance with accepted refrigeration practice to ensure good oil return to the compressor(s) under all normal operating conditions.

Packaged Unit Pre-Charged Refrigerant Volumes

Indoor Unit (IR)	kg/Circuit
DF8WX-EZRE	1.6
DF10WX-EZRE	1.6
DF13WX-EZRE	1.4
DF15WX-EZRE	2.0
DF17WX-EZRE	2.5
DF20WX2-EZRE	3.2
DF22WX2-EZRE	3.2
DF26WX2-EZRE	3.2
DF28WX-EZRE	5.3
DF31WX-EZRE	5.3
DF35WX-EZRE	6.0
DF40WX-EZRE	6.0
DF45WX-EZRE	8.7
DF50WX2-EZRE	9.0
DF55WX2-EZRE	9.7
DF60WX2-EZRE	9.8

Indoor Unit (IR)	kg/Circuit
V8WX-EZRE	1.6
V10WX-EZRE	1.6
V13WX-EZRE	2.1
V15WX-EZRE	2.6
V17WX-EZRE	2.6
V20WX2-EZRE	3.2
V22WX2-EZRE	3.2
V26WX2-EZRE	3.2
V28WX-EZRE	5.3
V28WX2-EZRE	5.2
V31WX-EZRE	5.3
V31WX2-EZRE	5.2
V35WX-EZRE	6.0
V35WX2-EZRE	5.9
V40WX-EZRE	6.0
V40WX2-EZRE	6.1
V45WX2-EZRE	8.7
V50WX2-EZRE	8.9
V55WX2-EZRE	9.7
V60WX2-EZRE	9.8

Liquid Line Refrigerant Charge (kg/m)

The following table shows the refrigerant charge / metre for the liquid line, using R410A and assuming a liquid line temperature of 40°C.

Liquid Line (m)	kg/m
3/8"	0.05
1/2"	0.09
5/8"	0.15
3/4"	0.21
7/8"	0.30
1 1/8"	0.53

Installation

Calculation of System Refrigerant Charge (kg)

The system refrigerant charge can be calculated using the following equation:

SR = LR + IR + OR

Where:

SR	=	Total System Refrigerant Charge (kg)
LR	=	Total Liquid Line Refrigerant Charge. (As calculated from above)
IR	=	Indoor Unit Refrigerant Charge.
OR	=	Outdoor Unit Refrigerant Charge.

Example

Indoor Unit Model Ref. = DF10X-EZRE
Outdoor Unit Model Ref = CR16 Condenser
Interconnecting Pipework = 10 metres

From the Refrigerant Pipe Sizing Guide, the liquid line size given for pipework length of 10 metres is:0.05kg/m

LR = L x m
Where:

L	=	10 metres
m	=	0.05 kg/m (Liquid Line Size = 3/8”)
LR	=	10 x 0.05 = 0.5kg

System Refrigerant Charge

SR = LR + IR + OR

Where:
LR = 0.5 kg. (As calculated from above)
IR = 1.0 kg
OR = 2.7 kg

SR = 0.5 + 1.0 + 2.7
Therefore
System Refrigerant Charge
= 4.2 kg / Circuit

Installation

Liquid Sub Cooling

The degree of liquid sub cooling required to prevent flashing of liquid refrigerant can be calculated by the following method.

Subcooling = Condensing temperature — Saturation temperature (Nett pressure at expansion valve)
Given the following as an example:

- Refrigerant R410A
- Condensing temperature (54.4°C) equivalent condensing pressure at 54.4°C = 34 Bar
- Liquid lift 20m
- Piping friction loss 0.21 bar
- Losses through valves and fittings 0.5 Bar

Pressure Loss due to Liquid Lift

= H x spl
Where
H = Height (m)
spl = Static pressure loss

= 20 x 0.115 = 2.3 bar

Total Pressure Loss in Liquid Line

TPL Liquid = PFL + Valves

Where
PFL = Pipe friction loss (0.21Bar)
Valves = Losses through Valves and fittings

= 0.21 +0.5 + 2.3
Total pressure loss in liquid line = 3.01 Bar

Nett Pressure at Expansion Valve

= Condensing pressure - Total pressure loss in liquid line

= 34 - 3.01 = 30.99 bar

Saturation temperature at the nett pressure at expansion valve (30.99 bar) = 52°C
(from refrigerant tables)

Sub Cooling Required

=Condensing temperature - Saturation temperature

= 54.4 - 52 = 2.4 °C

Therefore liquid sub cooling required to prevent liquid flashing = 2.4 °C

Oil Charging Guide

In order to determine if a system requires additional oil to accommodate for long interconnecting pipe lines and oil traps, a simple calculation can be used to approximate the volume of oil required as follows:

OT = (RC / 200) - (OC x 0.09)
Where
OT = Additional Oil Charge / Circuit (kg)
RC = Total Refrigerant Charge / Circuit (kg)
OC = Total Compressor Oil Charge / Circuit (l)

This calculation is based on the following assumptions:

1) 10% of the total compressor oil charge enters the system
2) A specific gravity of 0.09 between oil and water
3) Oil is added at a rate of 5 grams per kilogram of refrigerant
Example
What is the additional oil charge required per circuit for an DF10X-EZRE matched with a CR16 and a 3/8” 80m interconnecting liquid line?

Refrigerant charge of an DF10X - EZRE = 1.0 kg

Refrigerant charge of a CR50 = 2.7 kg

Interconnecting pipe line = 80 x 0.05 = 4.0 kg

Total system refrigerant charge = 1.0 + 2.7 + 4.0 = 7.7 kg

Compressor oil charge(s) = 1.2 litre

So,

OT = (RC / 200) - (OC x 0.09)

OT = (7.7 / 200) - (1.2 x 0.09)

OT = -0.07 litre

A negative value (as above) suggests that there is already sufficient oil in the system. You can calculate the maximum refrigerant charge for this system when additional oil charge is required as follows:

OT = (RC / 200) - (OC x 0.09)
RC = (OT + OC x 0.09) x 200
RC = (0 + 1.2x 0.09) x 200
RC = 21.6 kg

Refrigerant Pipesizing Guide - X Type Downflow

Pipe lengths calculated for Indoor unit with Airedale Outdoor Unit match.

Indoor	Outdoor	Indoor Unit Connection Size		Equivalent Pipe Lengths with R410A					
				0-15m			15-40m		
					Discharge			Discharge	
		Liquid	Discharge	Liquid	Horizontal(1)	Vertical(2)	Liquid	Horizontal(1)	Vertical(2)
DF6X	**CR12**	3/8”	1/2”	3/8”	1/2”	3/8”	3/8”	1/2”	3/8”
DF8X	**CR16**	3/8”	1/2”	3/8”	1/2”	1/2”	3/8”	5/8”	1/2”
DF10X	**CR16**	3/8”	1/2”	3/8”	5/8”	1/2”	3/8”	5/8”	1/2”
DF13X	**CR22**	3/8”	5/8”	3/8”	5/8”	1/2”	1/2”	3/4”	5/8”
DF15X	**CR22**	3/8”	5/8”	1/2”	5/8”	5/8”	1/2”	3/4”	5/8”
DF17X	**CR30**	3/8”	5/8”	1/2”	3/4”	5/8”	1/2”	7/8”	5/8”
DF20X2	**CR30**	1/2”	7/8”	1/2”	3/4”	5/8”	1/2”	7/8”	3/4”
DF22X2	**CR50**	1/2”	7/8”	1/2”	3/4”	5/8”	5/8”	7/8”	3/4”
DF28X	**CR50**	1/2”	7/8”	5/8”	7/8”	3/4”	5/8”	7/8”	7/8”
DF31X	**CR50**	1/2”	7/8”	5/8”	7/8”	7/8”	5/8”	1 1/8”	7/8”
DF35X	**CR50**	1/2”	7/8”	5/8”	7/8”	7/8”	5/8”	1 1/8”	7/8”
DF40X	**CR65**	5/8”	1 1/8”	5/8”	1 1/8”	7/8”	3/4”	1 1/8”	7/8”
DF45X	**CR80**	5/8”	1 1/8”	5/8”	1 1/8”	1 1/8”	3/4”	1 1/8”	1 1/8”
DF50X2	**CR80**	5/8”	1 3/8”	3/4”	1 1/8”	1 1/8”	3/4”	1 1/8”	1 1/8”
DF55X2	**CR80**	5/8”	1 3/8”	3/4”	1 1/8”	1 1/8”	3/4”	1 1/8”	1 1/8”
DF60X2	**CR80**	5/8”	1 3/8”	3/4”	1 1/8”	1 1/8”	7/8”	1 1/8”	1 1/8”

(1) For interconnecting pipework with a predominantly horizontal layout.
(2) For interconnecting pipework with a predominantly vertical layout.

CAUTION ⚠	Tandem compressor and suction throttle valve applications: In part load, gas velocity should be taken into account when selecting and commissioning pipework to ensure full oil return.

IMPORTANT ⚠	REMEMBER excessive pressure loss in interconnecting pipework will impair system performance; this should be factored in during the design of the system and where necessary oil separators employed.

Refrigerant Pipesizing Guide - X Type Upflow

Pipe lengths calculated for Indoor unit with Airedale Outdoor Unit match.

Indoor	Outdoor	Indoor Unit		Equivalent Pipe Lengths with R410A					
		Connection Size		0-15m			15-40m		
					Discharge			Discharge	
		Liquid	Discharge	Liquid	Horizontal(1)	Vertical(2)	Liquid	Horizontal(1)	Vertical(2)
V6X	**CR12**	3/8”	1/2”	3/8”	1/2”	3/8”	3/8”	1/2”	3/8”
V8X	**CR16**	3/8”	1/2”	3/8”	1/2”	1/2”	3/8”	5/8”	1/2”
V10X	**CR16**	3/8”	1/2”	3/8”	5/8”	1/2”	3/8”	5/8”	1/2”
V13X	**CR22**	3/8”	5/8”	3/8”	5/8”	1/2”	1/2”	3/4”	5/8”
V15X	**CR22**	3/8”	5/8”	1/2”	5/8”	5/8”	1/2”	3/4”	5/8”
V17X	**CR30**	3/8”	5/8”	1/2”	3/4”	5/8”	1/2”	7/8”	5/8”
V20X2	**CR30**	1/2”	7/8”	1/2”	3/4”	5/8”	1/2”	7/8”	3/4”
V22X2	**CR50**	1/2”	7/8”	1/2”	3/4”	5/8”	5/8”	7/8”	3/4”
V28X	**CR50**	1/2”	7/8”	5/8”	7/8”	3/4”	5/8”	7/8”	7/8”
V31X	**CR50**	1/2”	7/8”	5/8”	7/8”	7/8”	5/8”	1 1/8”	7/8”
V31X2	**CR50**	1/2”	7/8”	5/8”	7/8”	7/8”	5/8”	7/8”	7/8”
V35X	**CR50**	1/2”	7/8”	5/8”	7/8”	7/8”	5/8”	1 1/8”	7/8”
V35X2	**CR50**	1/2”	7/8”	5/8”	7/8”	7/8”	5/8”	7/8”	7/8”
V40X	**CR65**	5/8”	1 1/8”	5/8”	1 1/8”	7/8”	3/4”	1 1/8”	7/8”
V40X2	**CR65**	5/8”	1 1/8”	5/8”	7/8”	7/8”	3/4”	7/8”	7/8”
V45X2	**CR80**	5/8”	1 1/8”	5/8”	7/8”	7/8”	3/4”	7/8”	7/8”
V50X2	**CR80**	5/8”	1 3/8”	3/4”	1 1/8”	1 1/8”	3/4”	1 1/8”	1 1/8”
V55X2	**CR80**	5/8”	1 3/8”	3/4”	1 1/8”	1 1/8”	3/4”	1 1/8”	1 1/8”
V60X2	**CR80**	5/8”	1 3/8”	3/4”	1 1/8”	1 1/8”	7/8”	1 1/8”	1 1/8”

(1) For interconnecting pipework with a predominantly horizontal layout.
(2) For interconnecting pipework with a predominantly vertical layout.

CAUTION ⚠	Tandem compressor and suction throttle valve applications: In part load, gas velocity should be taken into account when selecting and commissioning pipework to ensure full oil return.

IMPORTANT ⚠	REMEMBER excessive pressure loss in interconnecting pipework will impair system performance; this should be factored in during the design of the system and where necessary oil separators employed.

Ethylene Glycol Correction Factors - WX Models

For conditions outside those quoted, please refer to Airedale.

The Use of Glycol

Glycol is recommended when a supply water temperature of +5°C or below is required or when static water can be exposed to freezing temperatures.

The presence of glycol in the system has a direct effect upon the Cooling Duty, the Design Flow Rate and the unit Pressure Drop.

To approximate the effect of glycol on unit performance, the following correction factors when applied can be used as a guide.

Where:

$\dot{V}$ = Corrected Flow Rate

THR = Equivalent Total Heat of Rejection (THR) (kW), refer to ***Cooling Duties - WX Models***, (the change in THR values as glycol concentration is increased is negligible.)

ΔT = Temperature difference between Water/Glycol Inlet/Outlet (°C).

ΔP = Maximum Water/ Glycol Pressure Drop for the indoor unit (kPa).

ΔP_W = Equivalent Water Pressure Drop for indoor unit (kPa), use the corrected flow rate $\dot{V}$. Refer to ***Waterside Pressure Drop (kPa) - WX Models***.

						Ethylene Glycol (Volume) / Freezing Point °C			
						10% / -4°C	20% / -9°C	30% / -15°C	40% / -23°C
$\dot{V}$	Corrected Flow Rate	=	THR / ΔT	Flow Rate	x by	0.240	0.250	0.250	0.260
ΔP	Corrected Pressure Drop	=	ΔPw	Pressure Drop		1.041	1.083	1.133	1.200

Example: V26WX2-EZ Condensing Entering / Leaving at 30°C/35°C, Based on ΔT of 5°C, 24°C/45% RH Ambient, 20% Ethylene Glycol

						Ethylene Glycol (Volume) / Freezing Point °C			
						10% / -4°C	20% / -9°C	30% / -15°C	40% / -23°C
$\dot{V}$	1.76 l/s	=	THR (35.2) / ΔT (12 - 7 = 5ΔT) =	7.04	x by	0.240	0.250	0.250	0.260
ΔP	157Pa	=	ΔPw	145 kPa		1.041	1.083	1.133	1.200

System Pipework Schematic

X Type

Design should be in accordance with good refrigeration practice to ensure good oil return to the compressor under all normal operating conditions to prolong the life of your unit.

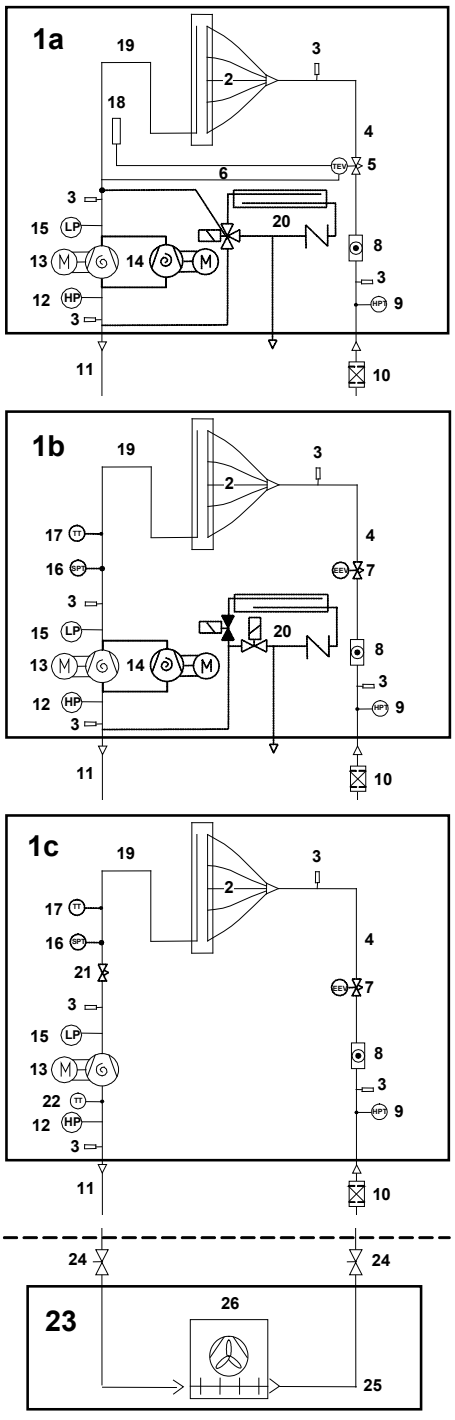

1	INDOOR UNIT
1a	Shown with Optional Hot Gas Re-Heat (HGRH): Sizes 8 - 35 comprising: Coil, Check Valve & 3 Way Solenoid Valve
1b	Shown with Optional Hot Gas Re-Heat (HGRH): Sizes 40 - 60 comprising: Coil, Check Valve & 2 x 2 way Solenoid Valves (1 NC and 1 NO)
1c	Shown with Optional Suction Throttle Valve, optional EEV standard with Suction Throttle Valve selection
2	Evaporator Coil
3	Schrader Point
4	Liquid Expansion Line
5	Thermostatic Expansion Valve (TEV) - Standard
6	Equalisation Line - Standard with TEV - Standard
7	Electronic Expansion Valve (EEV) - Optional in place of TEV and standard with Suction Throttle Valve option
8	Sight Glass
9	Head Pressure Transducer
10	Filter Drier (Supplied Loose)
11	Discharge Line
12	High Pressure Switch
13	Scroll Compressor
14	Additional Scroll Compressor (Tandem Set), Suction Throttle Valve not available with Tandem set
15	Low Pressure Switch
16	Suction Pressure Transducer - With Optional EEV
17	Temperature Transmitter - With Optional EEV
18	TEV Bulb - Standard with TEV
19	Suction Line
20	Hot Gas Re-Heat Option
21	Suction Throttle Valve; not available with HGRH and not available with Tandem Scroll units (Sizes 20X2 - 26X2 & 50X2 - 60X2)
22	Temperature Sensor - Discharge Gas (Sizes 28X - 45X & 50X2 - 60X2)
23	MATCHED OUTDOOR CONDENSER
24	Shut Off Valve (Supplied loose) - Optional with Outdoor Units
25	Liquid Line
26	Condenser Coil & Fan

System Pipework Schematic
WX Type

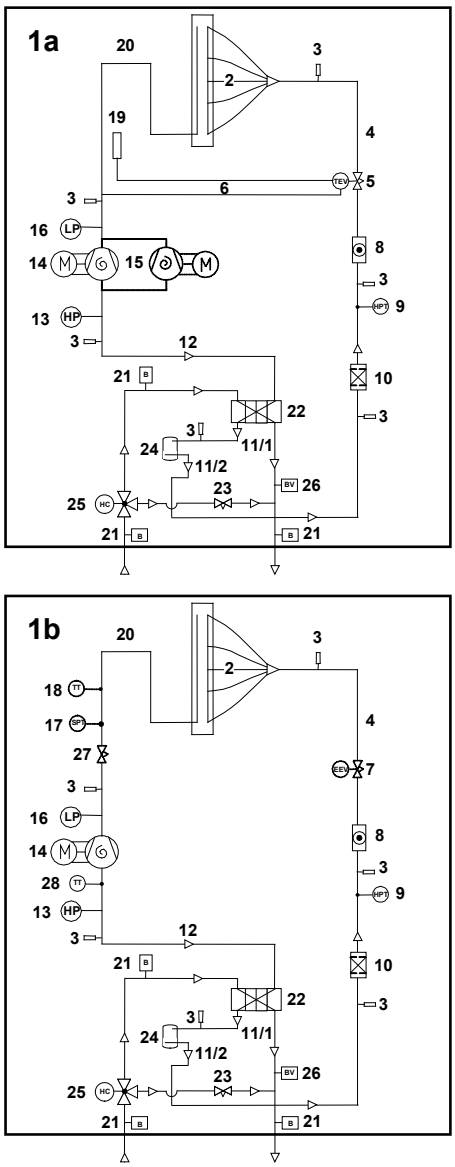

1	INDOOR UNIT
1a	Shown with standard Thermostatic Expansion Valve
1b	Shown with Optional Suction Throttle Valve, optional EEV standard with Suction Throttle Valve selection
2	Evaporator Coil
3	Schrader Point
4	Liquid Expansion Line
5	Thermostatic Expansion Valve (TEV) - Standard
6	Equalisation Line - Standard with TEV
7	Electronic Expansion valve (EEV) - Optional in place of TEV
8	Sight Glass
9	Head Pressure Transducer
10	Filter Drier
11	Liquid Line 1 & 2
12	Discharge Line
13	High Pressure Switch
14	Scroll Compressor
15	Additional Scroll Compressor (Tandem Set), Suction Throttle Valve not available with Tandem set
16	Low Pressure Switch
17	Suction Pressure Transducer - With Optional EEV
18	Temperature Transmitter - With Optional EEV
19	TEV Bulb - Standard with TEV
20	Suction Line
21	Binder Point
22	Plate Condenser
23	Bypass Leg & Bypass Balancing Valve
24	Liquid Receiver
25	Head Pressure Control Valve
26	Bleed Valve
27	Suction Throttle Valve; not available with HGRH and not available with Tandem Scroll units (Sizes 20X2 - 26X2 & 50X2 - 60X2)
28	Temperature Sensor - Discharge Gas (Sizes 28X - 45X & 50X2 - 60X2)

Interconnecting Wiring

X Models (Matched System)

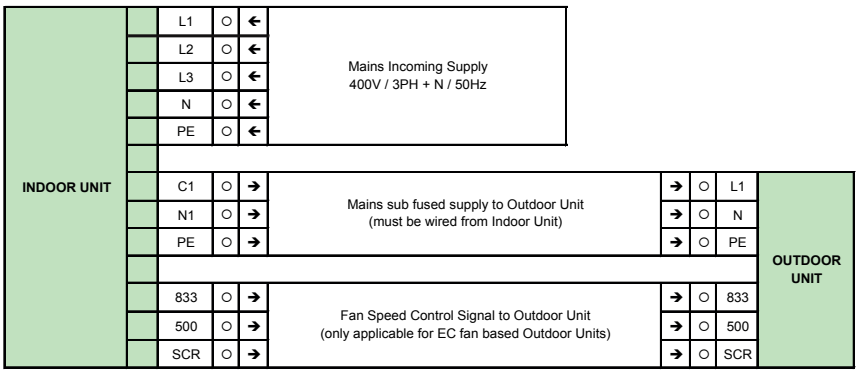

WX Models (Non-Matched System)

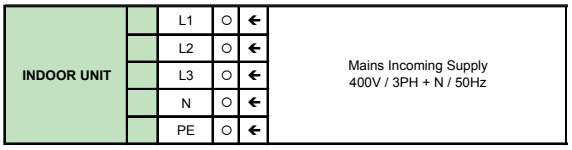

X and WX Models

Indoor Controls Only

Sizes 8-26

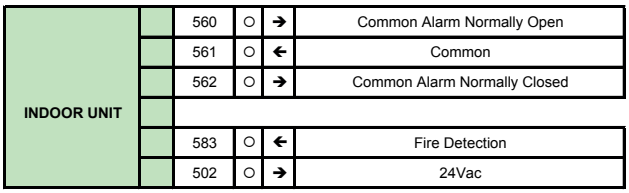

Sizes 28-60

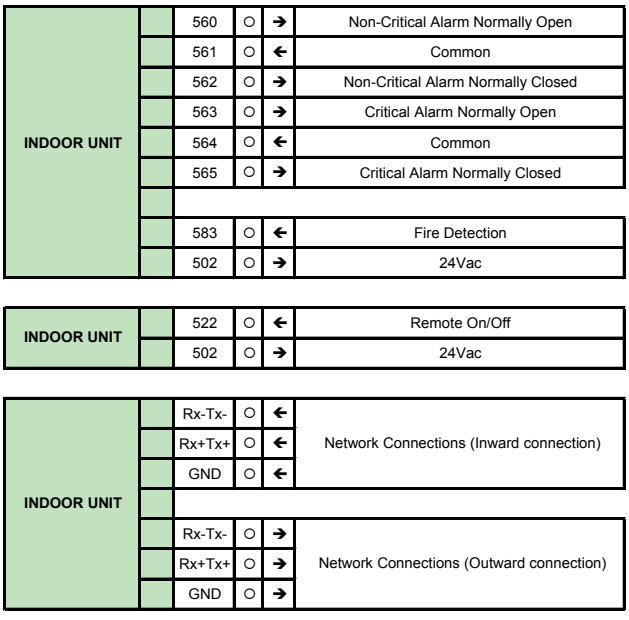

pLAN Termination

The plugged termination ensures that the connections are made simultaneously. Failure to attach the cables this way may cause damage to the controller.

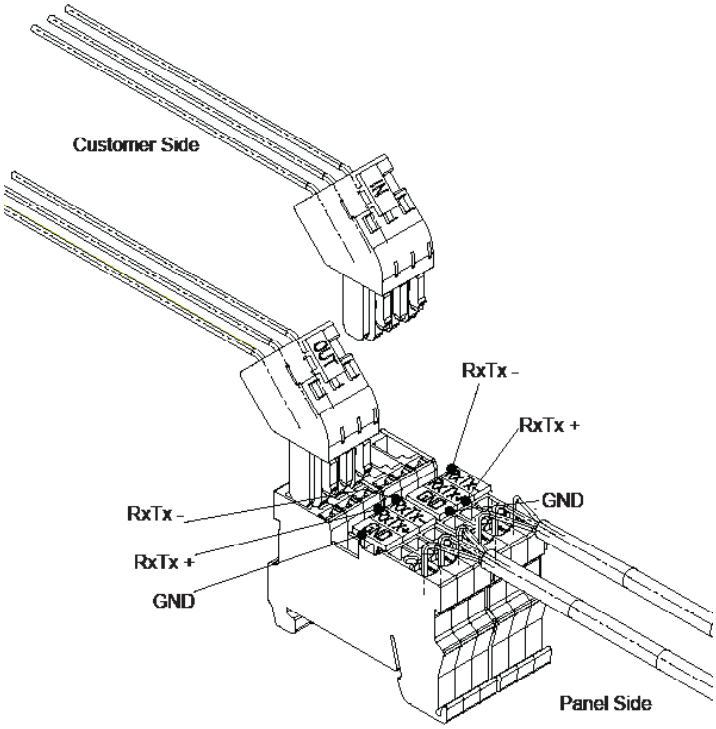

Water Detector Tape Installation

Monitored by a sensing relay, the water detection tape will provide an alarm when in contact with several drops of conductive liquid. High humidity should normally not cause an alarm unless it results in condensation dripping on the tape surface or condensation present on the surface to which the tape is applied.

The recommended installation process is as follows:

- When applying to a surface such as concrete, the most popular method is to press the tape firmly onto a continuous film of approved adhesive or glue. When properly glued to the floor the tape lies flat on the floor avoiding “bridging” (where the detector lifts off the floor allowing water to run under the detector without detection) and avoids damage to the detector
- When applying the tape directly to the piping, the tape is simply strapped to the pipe
- Care should be taken to prevent the wire detectors in the tape from coming into contact with any electrically conductive material causing a “fault” condition. Anything used in applying the tape which interferes with the capability of the fleece substrate may adversely affect the detector’s function
- The tape should not be installed under piping or equipment that can condense liquid as the condensation could drip on the tape causing an alarm
- The tape should not be installed directly under an air handling unit, but around the unit
- In the sub-floor of a computer room the tape should be installed after the raised floor, conduit and piping are installed and the sub-floor cleaned and sealed

IMPORTANT

Any adhesive which alters the chemical composition of the tape must be avoided and any use thereof voids any warranty, expressed or implied. **3M Scotch-Weld™ 77 adhesive** is strongly recommended to ensure the warranty will be maintained. When adhesive is used, adhesive with an oily or greasy base MUST be avoided as this will affect the tape’s ability to detect moisture.
When the use of an adhesive is not desirable or practical, staples, clips or other devices may be used. When applying the tape to piping a combination of glue and plastic or nylon straps or wire ties may be used. The straps or ties help to cut down installation time and secures the tape to the pipe while the adhesive cures and dries.

CAUTION

Any electrically conductive attachment devices used must not touch the wires that are within the tape fabric. The maximum length of a detector loop, including wire and detector tape is 50 metres. However, this tape length is not practical for most applications. Where the tape is concealed or not easily accessible, tape runs should be limited to no more than 30 metres, and 10 to 15 metres per zone is generally used. If the water detector tape is to be attached to or covered by a metallic or conductive surface, care should be taken not to short the conductors.

When installing tape to any surface, be careful not to short circuit or ground out the conductors (such as over/under conduit or sharp edges of cable trays etc.). This also applies to any covering which may be applied over the tape. Before installing the tape, be sure to inspect areas where the tape is to be applied for presence of chemical materials that could create problems. If in doubt, it is recommended to clean the floor with a mild detergent.

For further information, please refer to Airedale’s Technical Bulletin and Loose Part Instruction Manual.

Technical Data

Operating Limits

Indoor Air Temperature	+18°C to +28°C
Indoor RH%	+40% to +55% (Based upon 24°C Dry Bulb)
Outdoor Temperature	-20°C to +48°C

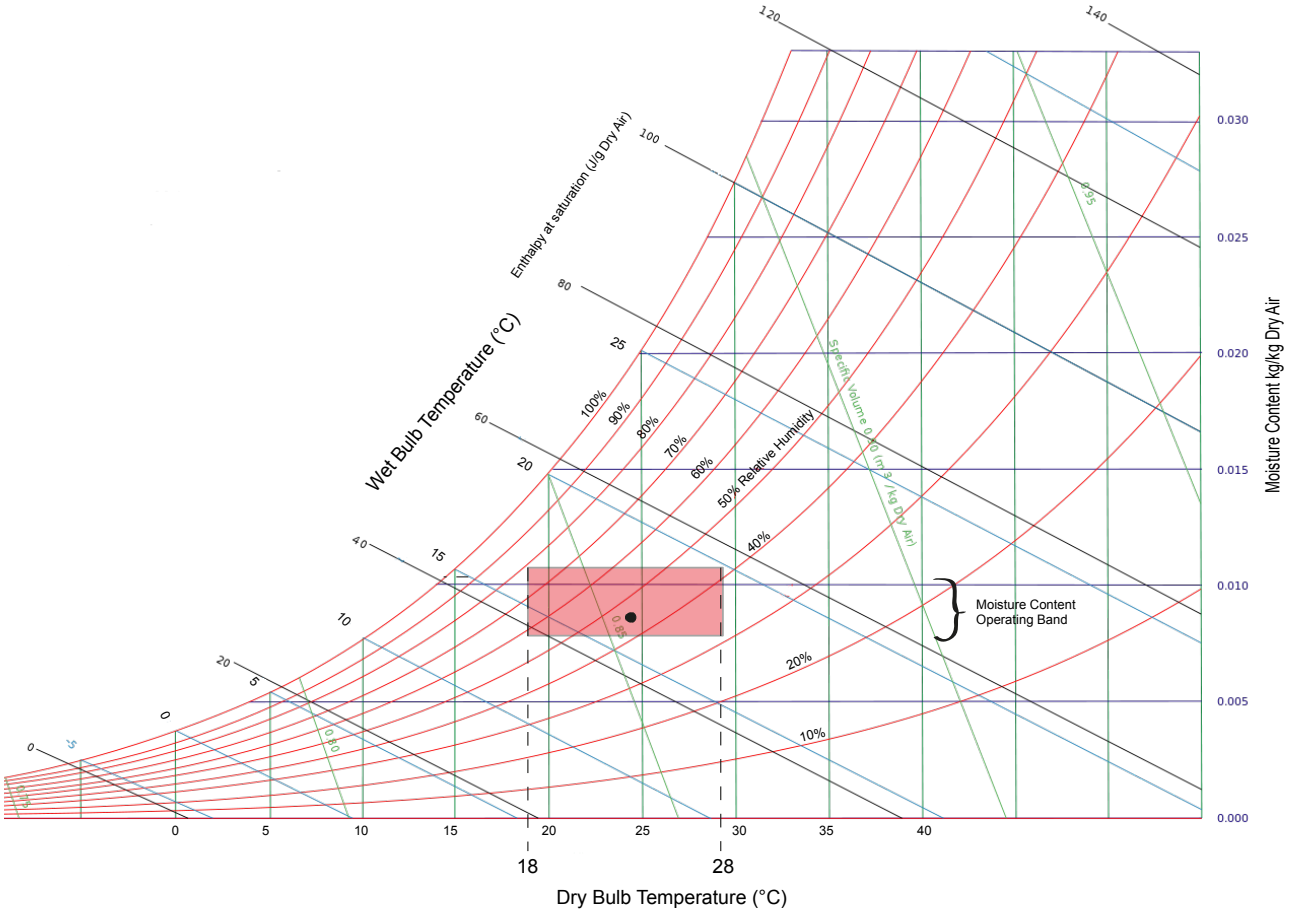

- Nominal Design Operating Condition 24°C Dry Bulb 45% RH

IMPORTANT ⚠	Fan Power Input (Fan Gain) must be added to the room load to establish full gross cooling capacity requirements. Fan Power Input can be found in the mechanical data sections. Fan Power Input is taken at the operating conditions based on 25Pa ESP.

Technical Data Downflow Units X Type - 1

Performance Data

Standard Condenser

Cooling Capacity (1)		Ambient							
	Air On	25°C		30°C		35°C		40°C	
	(DB°C/%RH)	TC (kW)	SC (kW)	TC (kW)	SC (kW)	TC (kW)	SC (kW)	TC (kW)	SC (kW)
DF15X-EZRE-1 / CR22M	22/50	16.9	15.4	16.9	15.4	16.5	15.1	15.8	14.7
	24/45	17.5	16.3	17.5	16.3	17.0	16.0	16.3	15.5
	26/40	18.0	17.5	18.0	17.5	17.5	17.2	16.8	16.6
DF17X-EZRE-1 / CR30M	22/50	18.7	16.6	18.7	16.6	18.5	16.5	17.6	16.0
	24/45	19.3	17.8	19.3	17.8	19.0	17.6	18.2	17.1
	26/40	19.9	19.1	19.9	19.1	19.6	19.0	18.8	18.4
DF28X-EZRE-1 / CR50M	22/50	26.2	26.2	26.2	26.2	26.2	26.2	25.0	25.0
	24/45	27.2	27.2	27.2	27.2	27.2	27.2	25.9	25.9
	26/40	28.2	28.2	28.2	28.2	28.2	28.2	26.9	26.9
DF31X-EZRE-1 / CR50	22/50	30.3	30.3	30.3	30.3	30.1	30.1	28.7	28.7
	24/45	31.5	31.5	31.5	31.5	31.2	31.2	29.8	29.8
	26/40	32.7	32.7	32.7	32.7	32.3	32.3	31.0	31.0
DF35X-EZRE-1 / CR50M	22/50	35.4	35.4	35.4	35.4	34.7	34.7	33.0	33.0
	24/45	36.7	36.7	36.7	36.7	35.9	35.9	34.2	34.2
	26/40	38.1	38.1	38.1	38.1	37.2	37.2	35.6	35.6
DF40X-EZRE-1 / CR65M	22/50	40.0	40.0	40.0	40.0	39.7	39.7	37.8	37.8
	24/45	41.5	41.5	41.5	41.5	41.1	41.1	39.2	39.2
	26/40	43.0	43.0	43.0	43.0	42.5	42.5	40.7	40.7
DF45X-EZRE-1 / CR80M	22/50	44.7	43.6	44.7	43.6	44.7	43.6	42.6	42.3
	24/45	46.3	46.3	46.3	46.3	46.3	46.3	44.1	44.1
	26/40	47.8	47.8	47.8	47.8	47.8	47.8	45.6	45.6
DF50X2-EZRE-1 / CR80M	22/50	50.9	49.3	50.9	49.3	50.5	49.1	47.9	47.4
	24/45	52.7	52.7	52.7	52.7	52.2	52.2	49.6	49.6
	26/40	54.5	54.5	54.5	54.5	53.8	53.8	51.3	51.3
DF55X2-EZRE-1 / CR80M	22/50	58.6	53.9	58.6	53.9	57.5	53.2	54.6	51.5
	24/45	60.6	58.0	60.6	58.0	59.2	57.1	56.4	55.4
	26/40	62.4	62.2	62.4	62.2	60.9	60.9	58.0	58.0
DF60X2-EZRE-1 / CR80M	22/50	66.4	60.2	66.4	60.2	64.2	58.9	60.8	57.0
	24/45	68.5	64.6	68.5	64.6	66.0	63.1	62.7	61.0
	26/40	70.6	69.2	70.6	69.2	67.9	67.5	64.5	64.5

Technical Data Downflow Units X Type - 1

Performance Data

Larger Condenser

Cooling Capacity (1)	Air On	Ambient									
		25°C		30°C		35°C		40°C		46°C	
	(DB°C/%RH)	TC (kW)	SC (kW)	TC (kW)	SC (kW)	TC (kW)	SC (kW)	TC (kW)	SC (kW)	TC (kW)	SC (kW)
DF15X-EZRE-1 / CR30M	22/50	16.9	15.4	16.9	15.4	16.9	15.3	16.1	14.9	15.3	14.4
	24/45	17.5	16.3	17.5	16.3	17.4	16.2	16.6	15.8	15.8	15.2
	26/40	18.0	17.5	18.0	17.5	17.9	17.4	17.1	16.9	16.3	16.3
DF17X-EZRE-1 / CR50M	22/50	18.7	16.6	18.7	16.6	18.7	16.6	18.2	16.4	17.5	16.0
	24/45	19.3	17.8	19.3	17.8	19.3	17.8	18.8	17.5	18.1	17.0
	26/40	19.9	19.1	19.9	19.1	19.9	19.1	19.4	18.8	18.6	18.3
DF28X-EZRE-1 / CR65M	22/50	26.2	26.2	26.2	26.2	26.2	26.2	25.4	25.4	24.3	24.3
	24/45	27.2	27.2	27.2	27.2	27.2	27.2	26.4	26.4	25.2	25.2
	26/40	28.2	28.2	28.2	28.2	28.2	28.2	27.4	27.4	26.3	26.3
DF31X-EZRE-1 / CR65M	22/50	30.3	30.3	30.3	30.3	30.3	30.3	29.3	29.3	27.9	27.9
	24/45	31.5	31.5	31.5	31.5	31.5	31.5	30.4	30.4	29.0	29.0
	26/40	32.7	32.7	32.7	32.7	32.7	32.7	31.5	31.5	30.2	30.2
DF35X-EZRE-1 / CR65M	22/50	35.4	35.4	35.4	35.4	35.4	35.4	33.8	33.8	32.0	32.0
	24/45	36.7	36.7	36.7	36.7	36.7	36.7	35.0	35.0	33.3	33.3
	26/40	38.1	38.1	38.1	38.1	38.0	38.0	36.4	36.4	34.8	34.8
DF40X-EZRE-1 / CR80M	22/50	40.0	40.0	40.0	40.0	40.0	40.0	38.4	38.4	36.6	36.6
	24/45	41.5	41.5	41.5	41.5	41.5	41.5	39.9	39.9	38.0	38.0
	26/40	43.0	43.0	43.0	43.0	43.0	43.0	41.3	41.3	39.6	39.6
DF45X-EZRE-1 / CR105M	22/50	44.7	43.6	44.7	43.6	44.7	43.6	43.2	42.7	41.1	41.1
	24/45	46.3	46.3	46.3	46.3	46.3	46.3	44.7	44.7	42.6	42.6
	26/40	47.8	47.8	47.8	47.8	47.8	47.8	46.2	46.2	44.1	44.1
DF50X2-EZRE-1 / CR105M	22/50	50.9	49.3	50.9	49.3	50.9	49.3	48.7	48.0	46.2	46.2
	24/45	52.7	52.7	52.7	52.7	52.7	52.7	50.4	50.4	47.8	47.8
	26/40	54.5	54.5	54.5	54.5	54.5	54.5	52.1	52.1	49.5	49.5
DF55X2-EZRE-1 / CR105M	22/50	58.6	53.9	58.6	53.9	58.5	53.8	55.7	52.2	52.7	50.3
	24/45	60.6	58.0	60.6	58.0	60.3	57.8	57.5	56.1	54.4	54.1
	26/40	62.4	62.2	62.4	62.2	62.0	61.9	59.2	59.2	56.0	56.0
DF60X2-EZRE-1 / CR105M	22/50	66.4	60.2	66.4	60.2	65.6	59.7	62.3	57.8	58.4	55.5
	24/45	68.5	64.6	68.5	64.6	67.5	64.0	64.2	62.0	60.3	59.5
	26/40	70.6	69.2	70.6	69.2	69.4	68.5	66.0	66.0	62.1	62.1

Technical Data Downflow Units X Type - 1

Noise Data

	Sound Measurement		Overall dB(A)	Frequency (Hz) dB 63	125	250	500	1000	2000	4000	8000
DF15X	Discharge Air	Power	73	70	75	72	69	68	67	62	57
	Return Air	Power	66	73	74	71	62	55	52	53	42
	Case Breakout	Power	62	70	72	63	57	54	49	51	44
	Sound @ 3m	Pressure	47	55	57	49	43	39	34	36	29
DF17X	Discharge Air	Power	77	74	78	76	73	72	70	66	61
	Return Air	Power	70	77	78	75	66	59	55	56	46
	Case Breakout	Power	65	73	76	67	61	57	52	53	46
	Sound @ 3m	Pressure	50	59	61	52	46	43	38	39	31
DF28X	Discharge Air	Power	87	77	80	79	81	81	82	79	76
	Return Air	Power	68	77	71	63	66	63	58	56	47
	Case Breakout	Power	70	80	70	63	67	67	60	57	48
	Sound @ 3m	Pressure	55	65	56	49	53	52	45	42	34
DF31X	Discharge Air	Power	91	78	84	83	85	84	85	83	80
	Return Air	Power	71	77	75	66	69	66	61	60	52
	Case Breakout	Power	73	80	74	67	70	69	63	60	52
	Sound @ 3m	Pressure	58	66	59	52	55	55	48	46	38
DF35X	Discharge Air	Power	90	77	83	82	87	83	84	82	79
	Return Air	Power	71	76	74	65	71	65	60	59	51
	Case Breakout	Power	72	78	73	66	71	68	61	60	51
	Sound @ 3m	Pressure	58	65	58	51	57	53	47	45	37
DF40X	Discharge Air	Power	92	80	86	85	89	86	86	85	81
	Return Air	Power	73	78	76	67	73	67	62	62	53
	Case Breakout	Power	75	80	75	68	74	70	64	62	54
	Sound @ 3m	Pressure	60	65	61	54	59	56	49	48	40
DF45X	Discharge Air	Power	92	80	86	85	89	86	86	85	81
	Return Air	Power	73	78	76	67	73	67	62	62	54
	Case Breakout	Power	75	80	75	68	74	70	64	62	54
	Sound @ 3m	Pressure	60	65	61	54	59	56	49	48	40
DF50X2	Discharge Air	Power	89	78	84	86	82	83	84	81	76
	Return Air	Power	69	76	75	69	66	64	59	58	48
	Case Breakout	Power	71	79	74	69	67	68	61	58	49
	Sound @ 3m	Pressure	56	64	59	55	52	53	47	43	34
DF55X2	Discharge Air	Power	89	78	84	86	82	83	84	81	76
	Return Air	Power	70	77	75	69	67	64	60	58	48
	Case Breakout	Power	71	79	74	69	68	68	62	58	49
	Sound @ 3m	Pressure	57	64	59	55	53	53	47	44	35
DF60X2	Discharge Air	Power	91	80	85	89	84	85	86	83	79
	Return Air	Power	71	79	76	72	69	66	62	60	51
	Case Breakout	Power	73	81	75	73	69	69	63	60	52
	Sound @ 3m	Pressure	58	66	60	58	55	54	49	46	37

(1) dB(A) is the overall sound level, measured on the A scale
(2) All sound data measured at nominal conditions, Discharge Air, Return air and case breakout is sound power.

Technical Data Downflow Units X Type DF15X - DF31X

Mechanical Data

			DF15X-EZRE-1	DF17X-EZRE-1	DF28X-EZRE-1	DF31X-EZRE-1
Standard Condenser Match			CR22	CR30	CR50	CR50
Capacity	(1)					
Nominal Cooling		kW	17.0	19.0	27.2	31.2
Capacity Steps			1	1	1	1
Dimensions - W x D x H		mm	990 x 670 x 1940	990 x 670 x 1940	990 x 670 x 1940	990 x 670 x 1940
Weight	(3)	kg	237	238	414	419
Construction			Panels: Galvanised Sheet Steel, Epoxy Baked			
Material/Colour			Powder Paint - Black, (RAL7021)			
			Frame: Aluminium Frame With Aluminium Corners			
Evaporator			Rifled Copper Tube/Turbulated Hydrophilic Coated Aluminium Fins			
Cooling/Dehum Stages			1/1	1/1	1/1	1/1
Evaporator Fan			Centrifugal Forward Curved		Centrifugal Forward Curved	
Motor - AC Motor			AC - Designed to 25Pa ESP		AC - Designed to 25Pa ESP	
Fan Transmission Type			Direct Drive	Direct Drive	Belt & Pulley	Belt & Pulley
Quantity			1	1	1	1
Motor Shaft Power	(4)	kW	N/A	N/A	2.2	4.0
Speed @ 25Pa / Maximum ESP		rpm	N/A	N/A	871 / 909	1008 /1171
Maximum ESP		Pa	120	34	75	265
Nominal Airflow		m³/s	1.20	1.40	2.40	2.80
Compressor - Scroll			Single			
Quantity			1	1	1	1
Oil Charge Volume (Total)		l	1.66	1.89	3.30	3.30
Oil Type			Polyol Ester			
Refrigeration	(5)		Single Circuit			
Refrigeration Control & Type			Thermostatic Expansion Valve (Optional EEV) / R410A			
Holding Charge			Inert Gas			
Connections						
Liquid (Sweat)		in	3/8	3/8	1/2	1/2
Discharge (Sweat)		in	5/8	5/8	7/8	7/8
Condensate Drain Hose		mm	19	19	19	19
Filtration			Disposable To ISO16890-ISO-C-75- 50mm			
Quantity			2	2	3	3
OPTIONAL EXTRAS						
Larger Condenser Match			CR30	CR50	CR65	CR65
Nom Cooling (Gross)		kW	17.4	19.3	27.2	31.5
Hot Gas Reheat	(6)					
Nominal Heating		kW	8.1	8.6	12.7	13.5
Electric Heating (Total)		kW	7.5	7.5	20.0	20.0
Humidifier						
Capacity		kg/hr	0.6 - 3.0	0.6 - 3.0	1.6 - 8.0	1.6 - 8.0
Feed/Drain			3/4" BSPF Braided Flexible Hose / 19mm Hose Connection			
Condensate Pump						
Head		m	8	8	5.0	5.0
Flow		l/m	5	5	10.8	10.8
Drain			10mm Stainless Steel Stub Connection			
Evaporator Fan Options:						
Larger Fan Motor - AC Motor			Centrifugal Forward Curved AC - Designed to 25Pa ESP			
Fan Transmission Type			Belt & Pulley			
Quantity			N/A	N/A	1	N/A
Motor Shaft Power	(4)	kW	N/A	N/A	3 / 4	N/A
Speed @ Maximum ESP		rpm	N/A	N/A	1144 / 1439	N/A
Maximum ESP		Pa	N/A	N/A	362 / 722	N/A
Optional Fan - EC Motor			Centrifugal Backward Curved EC - Designed to 25Pa ESP			
Fan Transmission Type			Direct Drive			
Quantity			2	2	2	2
Motor Shaft Power	(4)	kW	N/A	N/A	N/A	N/A
Speed @ 25Pa / Maximum ESP		rpm	1310 / 1560	1515 / 1560	1570 / 2165	1775 / 2165
Maximum ESP		Pa	195	45	595	390
Low Pressure Hot Water	(5)		Copper Tube / Aluminium Fin			
Capacity Gross		kW	12.5	13.3	21.3	22.7
Water Flow (Nominal)		l/s	0.28	0.30	0.48	0.51
LPHW Connection Sizes		mm	22	22	22	22

Technical Data Downflow Units X Type DF15X - DF31X

Electrical Data

Standard Condenser Match - X		DF15X-EZRE-1 CR22	DF17X-EZRE-1 CR30	DF28X-EZRE-1 CR50	DF31X-EZRE-1 CR50
Unit Data Full Function - X					
Nominal Run Amps	A	31.4	32.3	58.4	69.2
Maximum Start Amps	A	94.4	94.4	169.6	226.1
Recommended Mains Fuse Size	A	40	40	80	80
Unit Data Cooling Only - X					
Nominal Run Amps	A	20.0	20.9	24.2	35.0
Maximum Start Amps	A	83.0	83.0	135.4	191.9
Recommended Mains Fuse Size	A	25	25	32	50
Max Mains Incoming Cable Size	mm²	35	35	35	35
Mains Supply	V	380V / 3PH + N / 60HZ			
Control Circuit	VAC	24	24	24	24
Evaporator Fan - Motor Per Fan					
Electrical Input Power	kW	1.9	1.9	2.6	4.6
Full Load Amps	A	7.8	7.8	4.83	8.34
Locked Rotor Amps	A	19.5	19.5	33.81	58.38
Compressor - Per Compressor					
Quantity x Motor Size	kW	1 x 6.7	1 x 7.09	1 x 10.79	1 x 12.36
Nominal Run Amps	A	12.2	13.1	12.9	20.15
Locked Rotor Amps	A	75.2	75.2	124	177
Type of Start		Direct On Line			
Standard Condenser Match - AC Motor - Per Fan					
Electrical Input Power	kW	0.64	0.64	0.64	0.64
Full Load Amps	A	3.02	3.02	3.02	3.02
OPTIONAL EXTRAS					
Electric Heating					
Stage of Reheat		1	1	3	3
Number of Elements		3	3	8	8
Rating	kW	7.5	7.5	20	20
Curent per Phase	A	11.40	11.40	34.19	34.19
Humidifier					
Capacity	kg/hr	3	3	8	8
Rating	kW	2.25	2.25	6.00	6.00
Full Load Amps	A	3.42	3.42	9.12	9.12
Evaporator Fan Options Larger Fan Motor - AC Motor - Per Fan					
Electrical Input Power	kW	N/A	N/A	3.5	N/A
Full Load Amps	A	N/A	N/A	6.18	N/A
Locked Rotor Amps	A	N/A	N/A	43.3	N/A
Standard Size Motor - EC Motor - Per Fan					
Electrical Input Power	kW	1	1	2.55	2.55
Full Load Amps	A	1.85	1.85	3.9	3.9
Condenser Fan Options Standard Condenser Motor - EC Motor - Per Fan					
Electrical Input Power	kW	0.73	0.73	0.73	0.73
Full Load Amps	A	3.3	3.3	3.3	3.3

Mechanical

(1) Entering air 24°C/45% RH ambient 35°C.
(2) Fan Gain / Fan power input based upon fan operating with design airflow at 25Pa ESP, These values may change with different ESP.
(3) With Standard forward curved fan motors; Machine weight includes a refrigerant charge.
(4) Backward curved EC fan options quote electrical power. All other options quote shaft power.
(5) For refrigerant charges, refer to ***Unit Refrigerant Charge (kg/Circuit)***.
(6) Based on air temperature of 15.5°C leaving the evaporator coil.
(7) Based upon low pressure hot water 82°C inlet / 71°C outlet. Air on 20°C. Refer to ***Low Pressure Hot Water***.

Electrical

(1) Values given for full function units (incl. electric heating, humidification and matched condenser) at 7°C evaporating and 54.4°C condensing with standard forward curved fan motors, for optional data, please contact Airedale.
(2) Values given for Cooling only units (incl. Compressor, evaporator fan and matched condenser) at 7°C evaporating and 54.4°C condensing, for optional data, please contact Airedale.
(3) Electrical input power relates to the maximum absorbed electrical power. Actual operating fan power input is shown in the mechanical data tables.

Technical Data Downflow Units X Type DF35X - DF45X

Mechanical Data

			DF35X-EZRE-1	DF40X-EZRE-1	DF45X-EZRE-1
Standard Condenser Match			CR50	CR65	CR80
Capacity	(1)				
Nominal Cooling		kW	35.9	41.1	46.3
Capacity Steps			1	1	1
Dimensions - W x D x H		mm	1835 x 750 x 1940	1835 x 750 x 1940	1835 x 750 x 1940
Weight	(3)	kg	477	500	553
Construction			Panels: Galvanised Sheet Steel, Epoxy Baked		
Material/Colour			Powder Paint - Black, (RAL7021)		
			Frame: Aluminium Frame With Aluminium Corners		
Evaporator			Rifled Copper Tube/Turbulated Hydrophilic Coated Aluminium Fins		
Cooling/Dehum Stages			1/1	1/1	1/1
Evaporator Fan					
Motor - AC Motor			Centrifugal Forward Curved AC - Designed to 25Pa ESP		
Fan Transmission Type			Belt & Pulley		
Quantity		kW	1	1	1
Motor Shaft Power	(4)	kW	4.0	5.5	5.5
Speed @ 25Pa / Maximum ESP		rpm	980 /1078	1094 / 1186	1094 / 1186
Maximum ESP		Pa	165	175	175
Nominal Airflow		m^3/s	3.30	3.70	3.70
Compressor - Scroll			Single		
Quantity			1	1	1
Oil Charge Volume (Total)		l	3.30	3.30	6.70
Oil Type			Polyol Ester		
Refrigeration	(5)		Single Circuit		
Refrigeration Control & Type			Thermostatic Expansion Valve (Optional EEV) / R410A		
Holding Charge			Inert Gas		
Connections					
Liquid (Sweat)		in	1/2	5/8	5/8
Discharge (Sweat)		in	7/8	1 1/8	1 1/8
Condensate Drain Hose		mm	19	19	19
Filtration			Disposable To ISO16890-ISO-C-75- 50mm		
Quantity			3	3	3
OPTIONAL EXTRAS					
Larger Condenser Match			CR65	CR80	CR105
Nom Cooling (Gross)		kW	36.7	41.5	46.3
Hot Gas Reheat	(6)				
Nominal Heating		kW	19.4	20.3	20.3
Electric Heating (Total)		kW	20.0	20.0	20.0
Humidifier					
Capacity		kg/hr	3.0 - 15.0	3.0 - 15.0	3.0 - 15.0
Feed/Drain			3/4" BSPF Braided Flexible Hose / 19mm Hose Connection		
Condensate Pump					
Head		m	8	8	5.0
Flow		l/m	5	5	10.8
Drain			10mm Stainless Steel Stub Connection		
Evaporator Fan Options:					
Larger Fan Motor - AC Motor			Centrifugal Forward Curved AC - Designed to 25Pa ESP		
Fan Transmission Type			Belt & Pulley		
Quantity			2	N/A	N/A
Motor Shaft Power	(4)	kW	5.5	N/A	N/A
Speed @ Maximum ESP		rpm	1196	N/A	N/A
Maximum ESP		Pa	322	N/A	N/A
Optional Fan - EC Motor			Centrifugal Backward Curved EC - Designed to 25Pa ESP		
Fan Transmission Type			Direct Drive		
Quantity			2.00	2.00	2.00
Motor Shaft Power	(4)	kW	N/A	N/A	N/A
Speed @ 25Pa / Maximum ESP		rpm	1895 / 2165	2135 / 2165	2135 / 2165
Maximum ESP		Pa	285	70	70
Low Pressure Hot Water	(5)		Copper Tube / Aluminium Fin		
Capacity Gross		kW	30.0	31.5	31.5
Water Flow (Nominal)		l/s	0.67	0.70	0.70
LPHW Connection Sizes		mm	22	22	22

Technical Data Downflow Units X Type DF35X - DF45X

Electrical Data

Standard Condenser Match - X		DF35X-EZRE-1 CR50	DF40X-EZRE-1 CR65	DF45X-EZRE-1 CR80
Unit Data Full Function - X				
Nominal Run Amps	A	74.0	81.2	86.9
Maximum Start Amps	A	226.1	233.6	252.6
Recommended Mains Fuse Size	A	100	100	100
Unit Data Cooling Only - X				
Nominal Run Amps	A	39.8	47.0	52.8
Maximum Start Amps	A	191.9	199.4	218.4
Recommended Mains Fuse Size	A	50	63	63
Max Mains Incoming Cable Size	mm²	35	35	35
Mains Supply	V		380V / 3PH + N / 60HZ	
Control Circuit	VAC	24	24	24
Evaporator Fan - Motor Per Fan				
Electrical Input Power	kW	4.6	5.5	5.5
Full Load Amps	A	8.34	11.84	11.84
Locked Rotor Amps	A	58.38	91.2	91.2
Compressor - Per Compressor				
Quantity x Motor Size	kW	1 x 13.98	1 x 16.07	1 x 18.09
Nominal Run Amps	A	24.93	28.62	31.4
Locked Rotor Amps	A	177	181	197
Type of Start			Direct On Line	
Standard Condenser Match - AC Motor - Per Fan				
Electrical Input Power	kW	0.64	0.64	0.64
Full Load Amps	A	3.02	3.02	3.02
OPTIONAL EXTRAS				
Electric Heating				
Stage of Reheat		3	3	3
Number of Elements		8	8	8
Rating	kW	20	20	20
Curent per Phase	A	34.19	34.19	34.19
Humidifier				
Capacity	kg/hr	15	15	15
Rating	kW	11.25	11.25	11.25
Full Load Amps	A	17.09	17.09	17.09
Evaporator Fan Options Larger Fan Motor - AC Motor - Per Fan				
Electrical Input Power	kW	6.3	N/A	N/A
Full Load Amps	A	10.9	N/A	N/A
Locked Rotor Amps	A	69.8	N/A	N/A
Standard Size Motor - EC Motor - Per Fan				
Electrical Input Power	kW	2.55	2.55	2.55
Full Load Amps	A	3.9	3.9	3.9
Condenser Fan Options Standard Condenser Motor - EC Motor - Per Fan				
Electrical Input Power	kW	0.73	0.73	0.73
Full Load Amps	A	3.3	3.3	3.3

Mechanical

(1) Entering air 24°C/45% RH ambient 35°C.
(2) Fan Gain / Fan power input based upon fan operating with design airflow at 25Pa ESP, These values may change with different ESP.
(3) With Standard forward curved fan motors; Machine weight includes a refrigerant charge.
(4) Backward curved EC fan options quote electrical power. All other options quote shaft power.
(5) For refrigerant charges, refer to ***Unit Refrigerant Charge (kg/Circuit)***.
(6) Based on air temperature of 15.5°C leaving the evaporator coil.
(7) Based upon low pressure hot water 82°C inlet / 71°C outlet. Air on 20°C. Refer to ***Low Pressure Hot Water***.

Electrical

(1) Values given for full function units (incl. electric heating, humidification and matched condenser) at 7°C evaporating and 54.4°C condensing with standard forward curved fan motors, for optional data, please contact Airedale.
(2) Values given for Cooling only units (incl. Compressor, evaporator fan and matched condenser) at 7°C evaporating and 54.4°C condensing, for optional data, please contact Airedale.
(3) Electrical input power relates to the maximum absorbed electrical power. Actual operating fan power input is shown in the mechanical data tables.

Technical Data Downflow Units X Type DF50X2 - DF60X2

Mechanical Data

			DF50X2-EZRE-1	DF55X2-EZRE-1	DF60X2-EZRE-1
Standard Condenser Match			CR80	CR80	CR80
Capacity	(1)				
Nominal Cooling		kW	52.2	59.2	66.0
Capacity Steps			2	2	2
Dimensions - W x D x H		mm	2170 x 750 x 1940	2170 x 750 x 1940	2170 x 750 x 1940
Weight	(3)	kg	621	638	638
Construction			Panels: Galvanised Sheet Steel, Epoxy Baked		
Material/Colour			Powder Paint - Black, (RAL7021)		
			Frame: Aluminium Frame With Aluminium Corners		
Evaporator			Rifled Copper Tube/Turbulated Hydrophilic Coated Aluminium Fins		
Cooling/Dehum Stages			2/1	2/1	2/1
Evaporator Fan					
Motor - AC Motor			Centrifugal Forward Curved AC - Designed to 25Pa ESP		
Fan Transmission Type			Belt & Pulley		
Quantity		kW	2	2	2
Motor Shaft Power	(4)	kW	2.2	2.2	3
Speed @ 25Pa / Maximum ESP		rpm	1167 / 1170	1167 / 1170	1307 / 1311
Maximum ESP		Pa	35	35	75
Nominal Airflow		m³/s	4.20	4.20	4.60
Compressor - Scroll			Tandem		
Quantity			2	2	2
Oil Charge Volume (Total)		l	6.60	6.60	6.60
Oil Type			Polyol Ester		
Refrigeration	(5)		Single Circuit		
Refrigeration Control & Type			Thermostatic Expansion Valve (Optional EEV) / R410A		
Holding Charge			Inert Gas		
Connections					
Liquid (Sweat)		in	5/8	5/8	5/8
Discharge (Sweat)		in	1 3/8	1 3/8	1 3/8
Condensate Drain Hose		mm	19	19	19
Filtration			Disposable To ISO16890-ISO-C-75- 50mm		
Quantity			4	4	4
OPTIONAL EXTRAS					
Larger Condenser Match			CR105	CR105	CR105
Nom Cooling (Gross)		kW	52.7	60.3	67.5
Hot Gas Reheat	(6)				
Nominal Heating		kW	25.9	25.9	26.9
Electric Heating (Total)		kW	30.0	30.0	30.0
Humidifier					
Capacity		kg/hr	3.0 - 15.0	3.0 - 15.0	3.0 - 15.0
Feed/Drain			3/4" BSPF Braided Flexible Hose / 19mm Hose Connection		
Condensate Pump					
Head		m	5.0	5.0	5.0
Flow		l/m	10.8	10.8	10.8
Drain			10mm Stainless Steel Stub Connection		
Evaporator Fan Options:					
Larger Fan Motor - AC Motor			Centrifugal Forward Curved AC - Designed to 25Pa ESP		
Fan Transmission Type			Belt & Pulley		
Quantity			2	2	2
Motor Shaft Power	(4)	kW	3.0 / 4.0	3.0 / 4.0	4.0
Speed @ Maximum ESP		rpm	1448 / 1498	1448 / 1498	1497
Maximum ESP		Pa	310 / 360	310 / 360	275
Optional Fan - EC Motor			Centrifugal Backward Curved DD EC - Designed to 25Pa ESP		
Fan Transmission Type			Direct Drive		
Quantity			2 x 3.10	2 x 3.10	2 x 3.10
Motor Shaft Power	(4)	kW			
Speed @ 25Pa / Maximum ESP		rpm	1370 / 1510	1370 / 1510	1510 / 1510
Maximum ESP		Pa	165	165	25
Low Pressure Hot Water					
Capacity Gross	(7)	kW	37.7	37.7	39.2
Water Flow (Nominal)		l/s	0.84	0.84	0.87
LPHW Connection Sizes		mm	22	22	22

Technical Data Downflow Units X Type DF50X2 - DF60X2

Electrical Data

Standard Condenser Match - X		DF50X2-EZRE-1 CR80	DF55X2-EZRE-1 CR80	DF60X2-EZRE-1 CR80
Unit Data Full Function - X				
Nominal Run Amps	A	90.5	105.1	117.9
Maximum Start Amps	A	201.7	262.0	269.9
Recommended Mains Fuse Size	A	100	125	160
Unit Data Cooling Only - X				
Nominal Run Amps	A	44.9	59.5	72.3
Maximum Start Amps	A	156.1	216.4	224.4
Recommended Mains Fuse Size	A	50	80	80
Max Mains Incoming Cable Size	mm²	50	50	50
Mains Supply	V		380V / 3PH + N / 60HZ	
Control Circuit	VAC	24	24	24
Evaporator Fan - Motor Per Fan				
Electrical Input Power	kW	2.6	2.6	3.5
Full Load Amps	A	4.83	4.83	6.43
Locked Rotor Amps	A	33.81	33.81	45.01
Compressor - Per Compressor				
Quantity x Motor Size	kW	2 x 10.79	2 x 12.36	2 x 13.98
Nominal Run Amps	A	12.9	20.15	24.93
Locked Rotor Amps	A	124	177	177
Type of Start			Direct On Line	
Standard Condenser Match - AC Motor - Per Fan				
Electrical Input Power	kW	0.64	0.64	0.64
Full Load Amps	A	3.02	3.02	3.02
OPTIONAL EXTRAS				
Electric Heating				
Stage of Reheat		3	3	3
Number of Elements		12	12	12
Rating	kW	30	30	30
Curent per Phase	A	45.58	45.58	45.58
Humidifier				
Capacity	kg/hr	15	15	15
Rating	kW	11.25	11.25	11.25
Full Load Amps	A	17.09	17.09	17.09
Evaporator Fan Options Larger Fan Motor - AC Motor - Per Fan				
Electrical Input Power	kW	3.5	3.5	3.5
Full Load Amps	A	6.18	6.18	8.12
Locked Rotor Amps	A	43.3	43.3	60.9
Standard Size Motor - EC Motor - Per Fan				
Electrical Input Power	kW	3.1	3.1	3.1
Full Load Amps	A	4.8	4.8	4.8
Condenser Fan Options Standard Condenser Motor - EC Motor - Per Fan				
Electrical Input Power	kW	0.73	0.73	0.73
Full Load Amps	A	3.3	3.3	3.3

Mechanical

(1) Entering air 24°C/45% RH ambient 35°C.
(2) Fan Gain / Fan power input based upon fan operating with design airflow at 25Pa ESP, These values may change with different ESP.
(3) With Standard forward curved fan motors; Machine weight includes a refrigerant charge.
(4) Backward curved EC fan options quote electrical power. All other options quote shaft power.
(5) For refrigerant charges, refer to ***Unit Refrigerant Charge (kg/Circuit)***.
(6) Based on air temperature of 15.5°C leaving the evaporator coil.
(7) Based upon low pressure hot water 82°C inlet / 71°C outlet. Air on 20°C. Refer to ***Low Pressure Hot Water***.

Electrical

(1) Values given for full function units (incl. electric heating, humidification and matched condenser) at 7°C evaporating and 54.4°C condensing with standard forward curved fan motors, for optional data, please contact Airedale.
(2) Values given for Cooling only units (incl. Compressor, evaporator fan and matched condenser) at 7°C evaporating and 54.4°C condensing, for optional data, please contact Airedale.
(3) Electrical input power relates to the maximum absorbed electrical power. Actual operating fan power input is shown in the mechanical data tables.

Technical Data Upflow Units X Type - 1

Performance Data

Standard Condenser

Cooling Capacity (1)		Ambient							
	Air On	25°C		30°C		35°C		40°C	
	(DB°C/%RH)	TC (kW)	SC (kW)	TC (kW)	SC (kW)	TC (kW)	SC (kW)	TC (kW)	SC (kW)
V15X-EZRE-1 / CR22M	22/50	16.6	15.3	16.6	15.3	16.2	15.1	15.4	14.7
	24/45	17.1	16.2	17.1	16.2	16.7	16.0	15.9	15.5
	26/40	17.6	17.5	17.6	17.5	17.1	17.1	16.4	16.4
V17X-EZRE-1 / CR30M	22/50	18.3	16.6	18.3	16.6	18.1	16.5	17.3	16.0
	24/45	18.9	17.7	18.9	17.7	18.7	17.6	17.8	17.1
	26/40	19.4	19.1	19.4	19.1	19.1	18.9	18.3	18.3
V28X-EZRE-1 / CR50M	22/50	26.6	26.6	26.6	26.6	26.6	26.6	25.4	25.4
	24/45	27.6	27.6	27.6	27.6	27.6	27.6	26.4	26.4
	26/40	28.7	28.7	28.7	28.7	28.7	28.7	27.5	27.5
V31X-EZRE-1 / CR50M	22/50	30.8	30.8	30.8	30.8	30.6	30.6	29.1	29.1
	24/45	32.0	32.0	32.0	32.0	31.7	31.7	30.3	30.3
	26/40	33.3	33.3	33.3	33.3	32.9	32.9	31.5	31.5
V31X2-EZRE-1 / CR50M	22/50	32.4	32.4	32.4	32.4	32.0	32.0	30.5	30.5
	24/45	33.7	33.7	33.7	33.7	33.2	33.2	31.7	31.7
	26/40	35.0	35.0	35.0	35.0	34.4	34.4	33.0	33.0
V35X-EZRE-1 / CR50M	22/50	35.9	35.9	35.9	35.9	35.2	35.2	33.4	33.4
	24/45	37.3	37.3	37.3	37.3	36.5	36.5	34.8	34.8
	26/40	38.8	38.8	38.8	38.8	37.9	37.9	36.3	36.3
V35X2-EZRE-1 / CR50M	22/50	37.2	37.2	37.2	37.2	36.4	36.4	34.7	34.7
	24/45	38.7	38.7	38.7	38.7	37.8	37.8	36.1	36.1
	26/40	40.2	40.2	40.2	40.2	39.2	39.2	37.7	37.7
V40X-EZRE-1 / CR65M	22/50	40.6	40.6	40.6	40.6	40.3	40.3	38.4	38.4
	24/45	42.2	42.2	42.2	42.2	41.8	41.8	39.9	39.9
	26/40	43.8	43.8	43.8	43.8	43.3	43.3	41.5	41.5
V40X2-EZRE-1 / CR65M	22/50	42.2	42.2	42.2	42.2	41.8	41.8	39.9	39.9
	24/45	43.8	43.8	43.8	43.8	43.3	43.3	41.4	41.4
	26/40	45.4	45.4	45.4	45.4	44.8	44.8	43.0	43.0
V45X2-EZRE-1 / CR80M	22/50	48.4	46.8	48.4	46.8	48.1	46.6	45.9	45.2
	24/45	50.0	50.0	50.0	50.0	49.7	49.7	47.5	47.5
	26/40	51.7	51.7	51.7	51.7	51.3	51.3	49.1	49.1
V50X2-EZRE-1 / CR80M	22/50	51.7	50.8	51.7	50.8	51.2	50.5	48.6	48.6
	24/45	53.6	53.6	53.6	53.6	53.0	53.0	50.4	50.4
	26/40	55.5	55.5	55.5	55.5	54.7	54.7	52.2	52.2
V55X2-EZRE-1 / CR80M	22/50	59.5	55.5	59.5	55.5	58.3	54.8	55.4	53.0
	24/45	61.6	59.7	61.6	59.7	60.1	58.8	57.2	56.9
	26/40	63.5	63.5	63.5	63.5	61.9	61.9	59.0	59.0
V60X2-EZRE-1 / CR80M	22/50	67.5	62.1	67.5	62.1	65.1	60.7	61.7	58.6
	24/45	69.7	66.6	69.7	66.6	67.0	65.0	63.6	62.8
	26/40	71.8	71.4	71.8	71.4	68.9	68.9	65.5	65.5

Technical Data Upflow Units X Type

Performance Data

Larger Condenser

Cooling Capacity (1)		Ambient									
		25°C		30°C		35°C		40°C		46°C	
		TC (kW)	SC (kW)	TC (kW)	SC (kW)	TC (kW)	SC (kW)	TC (kW)	SC (kW)	TC (kW)	SC (kW)
V15X-EZRE-1 / CR30M	22/50	16.6	15.3	16.6	15.3	16.6	15.3	15.8	14.9	15.0	14.4
	24/45	17.1	16.2	17.1	16.2	17.0	16.2	16.3	15.7	15.5	15.2
	26/40	17.6	17.5	17.6	17.5	17.5	17.4	16.8	16.8	16.0	16.0
V17X-EZRE-1 / CR50M	22/50	18.3	16.6	18.3	16.6	18.3	16.6	17.9	16.3	17.1	15.9
	24/45	18.9	17.7	18.9	17.7	18.9	17.7	18.4	17.4	17.7	17.0
	26/40	19.4	19.1	19.4	19.1	19.4	19.1	18.9	18.8	18.2	18.2
V28X-EZRE-1 / CR65M	22/50	26.6	26.6	26.6	26.6	26.6	26.6	25.8	25.8	24.6	24.6
	24/45	27.6	27.6	27.6	27.6	27.6	27.6	26.8	26.8	25.7	25.7
	26/40	28.7	28.7	28.7	28.7	28.7	28.7	27.9	27.9	26.8	26.8
V31X-EZRE-1 / CR65M	22/50	30.8	30.8	30.8	30.8	30.8	30.8	29.7	29.7	28.3	28.3
	24/45	32.0	32.0	32.0	32.0	32.0	32.0	30.9	30.9	29.5	29.5
	26/40	33.3	33.3	33.3	33.3	33.3	33.3	32.1	32.1	30.8	30.8
V31X2-EZRE-1 / CR65M	22/50	32.4	32.4	32.4	32.4	32.4	32.4	31.2	31.2	29.7	29.7
	24/45	33.7	33.7	33.7	33.7	33.7	33.7	32.4	32.4	30.9	30.9
	26/40	35.0	35.0	35.0	35.0	35.0	35.0	33.7	33.7	32.2	32.2
V35X-EZRE-1 / CR65M	22/50	35.9	35.9	35.9	35.9	35.9	35.9	34.3	34.3	32.5	32.5
	24/45	37.3	37.3	37.3	37.3	37.3	37.3	35.6	35.6	33.9	33.9
	26/40	38.8	38.8	38.8	38.8	38.7	38.7	37.1	37.1	35.5	35.5
V35X2-EZRE-1 / CR65M	22/50	37.2	37.2	37.2	37.2	37.2	37.2	35.6	35.6	33.8	33.8
	24/45	38.7	38.7	38.7	38.7	38.6	38.6	37.0	37.0	35.3	35.3
	26/40	40.2	40.2	40.2	40.2	40.1	40.1	38.5	38.5	36.9	36.9
V40X-EZRE-1 / CR80M	22/50	40.6	40.6	40.6	40.6	40.6	40.6	39.0	39.0	37.1	37.1
	24/45	42.2	42.2	42.2	42.2	42.2	42.2	40.5	40.5	38.7	38.7
	26/40	43.8	43.8	43.8	43.8	43.8	43.8	42.1	42.1	40.4	40.4
V40X2-EZRE-1 / CR80M	22/50	42.2	42.2	42.2	42.2	42.2	42.2	40.5	40.5	38.7	38.7
	24/45	43.8	43.8	43.8	43.8	43.8	43.8	42.1	42.1	40.2	40.2
	26/40	45.4	45.4	45.4	45.4	45.4	45.4	43.7	43.7	41.9	41.9
V45X2-EZRE-1 / CR105M	22/50	48.4	46.8	48.4	46.8	48.4	46.8	46.6	45.7	44.4	44.2
	24/45	50.0	50.0	50.0	50.0	50.0	50.0	48.2	48.2	46.0	46.0
	26/40	51.7	51.7	51.7	51.7	51.7	51.7	49.8	49.8	47.6	47.6
V50X2-EZRE-1 / CR105M	22/50	51.7	50.8	51.7	50.8	51.7	50.8	49.4	49.3	46.8	46.8
	24/45	53.6	53.6	53.6	53.6	53.6	53.6	51.2	51.2	48.6	48.6
	26/40	55.5	55.5	55.5	55.5	55.5	55.5	53.0	53.0	50.4	50.4
V55X2-EZRE-1 / CR105M	22/50	59.5	55.5	59.5	55.5	59.3	55.4	56.5	53.7	53.4	51.7
	24/45	61.6	59.7	61.6	59.7	61.2	59.5	58.4	57.7	55.2	55.2
	26/40	63.5	63.5	63.5	63.5	63.0	63.0	60.2	60.2	56.9	56.9
V60X2-EZRE-1 / CR105M	22/50	67.5	62.1	67.5	62.1	66.5	61.5	63.2	59.5	59.3	57.1
	24/45	69.7	66.6	69.7	66.6	68.6	65.9	65.2	63.8	61.2	61.1
	26/40	71.8	71.4	71.8	71.4	70.5	70.5	67.1	67.1	63.0	63.0

Technical Data Upflow Units X Type

Noise Data

	Sound Measurement		Overall dB(A)	Frequency (Hz) dB 63	125	250	500	1000	2000	4000	8000
V15X	Discharge Air	Power	74	71	76	73	70	69	68	63	58
	Return Air	Power	62	68	72	63	56	56	49	48	42
	Case Breakout	Power	62	68	72	63	56	56	49	48	42
	Sound @ 3m	Pressure	47	53	57	48	41	42	35	34	27
V17X	Discharge Air	Power	78	75	79	77	74	73	71	67	62
	Return Air	Power	65	72	75	67	59	59	53	51	44
	Case Breakout	Power	65	72	75	67	59	59	53	51	44
	Sound @ 3m	Pressure	50	57	61	52	44	44	38	36	30
V28X	Discharge Air	Power	90	102	95	86	84	85	81	81	78
	Return Air	Power	79	89	80	79	76	75	68	63	57
	Case Breakout	Power	79	89	80	79	76	75	68	63	57
	Sound @ 3m	Pressure	64	75	65	65	62	60	53	49	42
V28X2	Discharge Air	Power	90	102	95	86	84	85	81	81	78
	Return Air	Power	79	87	80	79	76	74	67	63	57
	Case Breakout	Power	79	87	80	79	76	74	67	63	57
	Sound @ 3m	Pressure	64	73	65	65	61	60	53	49	42
V31X2	Discharge Air	Power	93	105	96	89	86	88	84	84	82
	Return Air	Power	81	91	80	82	77	77	70	66	60
	Case Breakout	Power	81	91	80	82	77	77	70	66	60
	Sound @ 3m	Pressure	66	76	66	67	63	62	55	51	46
V35X	Discharge Air	Power	92	111	98	90	87	82	82	83	80
	Return Air	Power	81	97	82	84	80	72	69	66	58
	Case Breakout	Power	81	97	82	84	80	72	69	66	58
	Sound @ 3m	Pressure	67	82	68	69	66	58	54	51	44

(1) dB(A) is the overall sound level, measured on the A scale
(2) All sound data measured at nominal conditions, Discharge Air, Return air and case breakout is sound power.

Technical Data Upflow Units X Type

Noise Data

	Sound Measurement		Overall dB(A)	Frequency (Hz) dB 63	125	250	500	1000	2000	4000	8000
V35X2	Discharge Air	Power	92	111	98	90	87	82	82	83	80
	Return Air	Power	81	97	82	84	79	72	69	66	59
	Case Breakout	Power	81	97	82	84	79	72	69	66	59
	Sound @ 3m	Pressure	66	82	68	69	65	58	54	51	45
V40X	Discharge Air	Power	94	113	99	92	89	84	85	85	83
	Return Air	Power	83	98	84	85	82	74	71	68	61
	Case Breakout	Power	83	98	84	85	82	74	71	68	61
	Sound @ 3m	Pressure	68	84	69	71	67	59	56	53	46
V40X2	Discharge Air	Power	94	113	99	92	89	84	85	85	83
	Return Air	Power	82	98	84	85	81	74	71	68	62
	Case Breakout	Power	82	98	84	85	81	74	71	68	62
	Sound @ 3m	Pressure	68	85	69	71	66	59	56	53	47
V45X2	Discharge Air	Power	94	113	99	92	89	84	85	85	83
	Return Air	Power	83	98	84	85	83	74	71	68	62
	Case Breakout	Power	83	98	84	85	83	74	71	68	62
	Sound @ 3m	Pressure	69	84	69	71	68	59	57	53	47
V50X2	Discharge Air	Power	97	115	109	95	92	84	86	84	80
	Return Air	Power	84	99	93	86	83	74	71	66	58
	Case Breakout	Power	84	99	93	86	83	74	71	66	58
	Sound @ 3m	Pressure	70	85	79	72	68	60	57	52	43
V55X2	Discharge Air	Power	97	115	109	95	92	84	86	84	80
	Return Air	Power	84	99	93	86	83	74	72	66	58
	Case Breakout	Power	84	99	93	86	83	74	72	66	58
	Sound @ 3m	Pressure	70	85	79	72	68	60	57	52	43
V60X2	Discharge Air	Power	98	116	110	97	93	86	87	86	82
	Return Air	Power	86	102	94	89	85	76	73	69	60
	Case Breakout	Power	86	102	94	89	85	76	73	69	60
	Sound @ 3m	Pressure	72	87	80	75	70	61	59	54	46

(1) dB(A) is the overall sound level, measured on the A scale
(2) All sound data measured at nominal conditions, Discharge Air, Return air and case breakout is sound power.

Technical Data Upflow Units X Type V15X - V17X

Mechanical Data

			V15X-EZRE-1	V17X-EZRE-1
Standard Condenser Match			CR22	CR30
Capacity	(1)			
Nominal Cooling		kW	16.7	18.7
Capacity Steps			1	1
Dimensions - Wx D x H		mm	990 x 670 x 1940	990 x 670 x 1940
Weight	(3)	kg	231	232
Construction			Panels: Galvanised Sheet Steel, Epoxy Baked	
Material/Colour			Powder Paint - Black, (RAL7021)	
			Frame: Aluminium Frame With Aluminium Corners	
Evaporator			Rifled Copper Tube/Turbulated Hydrophilic Coated Aluminium Fins	
Cooling/Dehum Stages			1/1	1/1
Evaporator Fan				
Motor - AC Motor			Centrifugal Forward Curved AC - Designed To 25Pa ESP	
Fan Transmission Type			Direct Drive	
Quantity			1	1
Motor Shaft Power	(4)	kW	N/A	N/A
Speed @ 25Pa / Maximum ESP		rpm	N/A	N/A
Maximum ESP		Pa	127	42
Nominal Airflow		m³/s	1.20	1.40
Compressor - Scroll			Single	
Quantity			1	1
Oil Charge Volume (Total)		l	1.66	1.89
Oil Type			Polyol Ester	
Refrigeration	(5)		Single Circuit	
Refrigeration Control & Type			Thermostatic Expansion Valve (Optional EEV) / R410A	
Holding Charge			Inert Gas	
Connections				
Liquid (Sweat)		in	3/8	3/8
Discharge (Sweat)		in	5/8	5/8
Filtration			Disposable To ISO16890-ISO-C-75- 50mm	
Quantity			2	2
OPTIONAL EXTRAS				
Larger Condenser Match			CR30	CR50
Nominal Cooling		kW	17.0	18.9
Hot Gas Reheat	(6)			
Nom Heating (Gross)		kW	7.7	8.2
Electric Heating (Total)		kW	7.5	7.5
Humidifier				
Capacity		kg/hr	0.6 - 3.0	0.6 - 3.0
Feed/Drain			3/4" BSPF Braided Flexible Hose / 19mm Hose Connection	
Condensate Pump				
Head		m	8	8
Flow		l/m	5	5
Drain			10mm Stainless Steel Stub Connection	
Evaporator Fan Options:				
Optional Fan - EC Motor			Centrifugal Backward Curved EC - Designed To 25Pa ESP	
Fan Transmission Type			Direct Drive	
Quantity			1	1
Motor Shaft Power	(4)	kW	N/A	N/A
Speed @ 25Pa / Maximum ESP		rpm	1330 / 1560	1560 / 1560
Maximum ESP		Pa	165	25
Low Pressure Hot Water	(7)		Copper Tube / Aluminium Fin	
Capacity Gross		kW	12.7	13.7
Water Flow (Nominal)		l/s	0.28	0.31
LPHW Connection Sizes		mm	22	22

Technical Data Upflow Units X Type V15X - V17X

Electrical Data

Standard Condenser Match - X		V15X-EZRE-1 CR22	V17X-EZRE-1 CR30
Unit Data Full Function - X			
Nominal Run Amps	A	31.4	32.3
Maximum Start Amps	A	94.4	94.4
Recommended Mains Fuse Size	A	40	40
Unit Data Cooling Only - X			
Nominal Run Amps	A	20.0	20.9
Maximum Start Amps	A	83.0	83.0
Recommended Mains Fuse Size	A	25	25
Max Mains Incoming Cable Size	mm²	35	35
Mains Supply	V	380V / 3PH + N / 60HZ	
Control Circuit	VAC	24	24
Evaporator Fan - Motor Per Fan			
Electrical Input Power	kW	1.9	1.9
Full Load Amps	A	7.8	7.8
Locked Rotor Amps	A	19.5	19.5
Compressor - Per Compressor			
Quantity x Motor Size	kW	1 x 6.7	1 x 7.09
Nominal Run Amps	A	12.2	13.1
Locked Rotor Amps	A	75.2	75.2
Type of Start		Direct On Line	
Standard Condenser Match - AC Motor - Per Fan			
Electrical Input Power	kW	0.64	0.64
Full Load Amps	A	3.02	3.02
OPTIONAL EXTRAS			
Electric Heating			
Stage of Reheat		1	1
Number of Elements		3	3
Rating	kW	7.5	7.5
Curent per Phase	A	11.40	11.40
Humidifier			
Capacity	kg/hr	3	3
Rating	kW	2.25	2.25
Full Load Amps	A	3.42	3.42
Evaporator Fan Options Larger Fan Motor - AC Motor - Per Fan			
Electrical Input Power	kW	N/A	N/A
Full Load Amps	A	N/A	N/A
Locked Rotor Amps	A	N/A	N/A
Standard Size Motor - EC Motor - Per Fan			
Electrical Input Power	kW	1	1
Full Load Amps	A	1.85	1.85
Condenser Fan Options Standard Condenser Motor - EC Motor - Per Fan			
Electrical Input Power	kW	0.73	0.73
Full Load Amps	A	3.3	3.3

Mechanical

(1) Entering air 24°C/45% RH ambient 35°C.
(2) Fan Gain / Fan power input based upon fan operating with design airflow at 25Pa ESP, These values may change with different ESP.
(3) With Standard forward curved fan motors; Machine weight includes a refrigerant charge.
(4) Backward curved EC fan options quote electrical power. All other options quote shaft power.
(5) For refrigerant charges, refer to ***Unit Refrigerant Charge (kg/Circuit)***.
(6) Based on air temperature of 15.5°C leaving the evaporator coil.
(7) Based upon low pressure hot water 82°C inlet / 71°C outlet. Air on 20°C. Refer to ***Low Pressure Hot Water***.

Electrical

(1) Values given for full function units (incl. electric heating, humidification and matched condenser) at 7°C evaporating and 54.4°C condensing with standard forward curved fan motors, for optional data, please contact Airedale.
(2) Values given for Cooling only units (incl. Compressor, evaporator fan and matched condenser) at 7°C evaporating and 54.4°C condensing, for optional data, please contact Airedale.
(3) Electrical input power relates to the maximum absorbed electrical power. Actual operating fan power input is shown in the mechanical data tables.

Technical Data Downflow Units X Type V28X - V31X2

Mechanical Data

			V28X-EZRE-1	V31X-EZRE-1	V31X2-EZRE-1
Standard Condenser Match			CR50	CR50	CR50
Capacity	(1)				
Nominal Cooling		kW	27.6	31.7	33.2
Capacity Steps			1	1	2
Dimensions - Wx D x H		mm	1460 x 750 x 1940	1460 x 750 x 1940	1460 x 750 x 1940
Weight	(3)	kg	412	412	445
Construction			Panels: Galvanised Sheet Steel, Epoxy Baked		
Material/Colour			Powder Paint - Black, (RAL7021)		
			Frame: Aluminium Frame With Aluminium Corners		
Evaporator			Rifled Copper Tube/Turbulated Hydrophilic Coated Aluminium Fins		
Cooling/Dehum Stages			1/1	1/1	2/1
Evaporator Fan Motor - AC Motor			Centrifugal Forward Curved AC - Designed To 25Pa ESP		
Fan Transmission Type			Belt & Pulley		
Quantity			1	1	1
Motor Shaft Power	(4)	kW	3	4	4
Speed @ 25Pa / Maximum ESP		rpm	1420 / 1552	1600 / 1612	1600 / 1612
Maximum ESP		Pa	160	35	35
Nominal Airflow		m³/s	2.40	2.80	2.80
Compressor - Scroll			Single		Tandem
Quantity			1	1	2
Oil Charge Volume (Total)		l	3.30	3.30	3.32
Oil Type			Polyol Ester		
Refrigeration	(5)		Single Circuit		
Refrigeration Control & Type			Thermostatic Expansion Valve (Optional EEV) / R410A		
Holding Charge			Inert Gas		
Connections					
Liquid (Sweat)		in	1/2	1/2	1/2
Discharge (Sweat)		in	7/8	7/8	7/8
Filtration			Disposable To ISO16890-ISO-C-75- 75mm		
Quantity			3	3	3
OPTIONAL EXTRAS					
Larger Condenser Match			CR65	CR65	CR65
Nominal Cooling		kW	27.6	32.0	33.7
Hot Gas Reheat	(6)				
Nom Heating (Gross)		kW	12.8	13.7	13.7
Electric Heating (Total)		kW	22.5	22.5	22.5
Humidifier					
Capacity		kg/hr	1.6 - 8.0	1.6 - 8.0	1.6 - 8.0
Feed/Drain			3/4" BSPF Braided Flexible Hose / 19mm Hose Connection		
Condensate Pump					
Head		m	5.0	5.0	5.0
Flow		l/m	10.8	10.8	10.8
Drain			10mm Stainless Steel Stub Connection		
Evaporator Fan Options:					
Larger Fan Motor - AC Motor			Centrifugal Forward Curved AC - Designed To 25Pa ESP		
Fan Transmission Type			Belt & Pulley	N/A	N/A
Quantity			1	N/A	N/A
Motor Shaft Power	(4)	kW	4.0	N/A	N/A
Speed @ Maximum ESP		rpm	1910	N/A	N/A
Maximum ESP		Pa	470	N/A	N/A
Optional Fan - EC Motor			Centrifugal Backward Curved EC - Designed To 25Pa ESP		
Fan Transmission Type			Direct Drive		
Quantity			1	1	2
Motor Shaft Power	(4)	kW	N/A	N/A	N/A
Speed @ 25Pa / Maximum ESP		rpm	1700 / 2165	1935 / 2165	1935 / 2165
Maximum ESP		Pa	440	225	225
Low Pressure Hot Water	(7)		Copper Tube / Aluminium Fin		
Capacity Gross		kW	21.7	23.2	23.2
Water Flow (Nominal)		l/s	0.48	0.52	0.52
LPHW Connection Sizes		mm	22	22	22

Technical Data Downflow Units X Type V28X - V31X2

Electrical Data

Standard Condenser Match - X		V28X-EZRE-1 CR50	V31X-EZRE-1 CR50	V31X2-EZRE-1 CR50
Unit Data Full Function - X				
Nominal Run Amps	A	60.0	69.2	73.4
Maximum Start Amps	A	171.2	226.1	136.4
Recommended Mains Fuse Size	A	80	80	100
Unit Data Cooling Only - X				
Nominal Run Amps	A	25.8	35.0	39.2
Maximum Start Amps	A	137.0	191.9	102.3
Recommended Mains Fuse Size	A	32	50	50
Max Mains Incoming Cable Size	mm²	35	35	35
Mains Supply	V		380V / 3PH + N / 60HZ	
Control Circuit	VAC	24	24	24
Evaporator Fan - Motor Per Fan				
Electrical Input Power	kW	3.5	4.6	4.6
Full Load Amps	A	6.43	8.34	8.34
Locked Rotor Amps	A	45.01	58.38	58.38
Compressor - Per Compressor				
Quantity x Motor Size	kW	1 x 10.79	1 x 12.36	2 x 6.7
Nominal Run Amps	A	12.9	20.15	12.2
Locked Rotor Amps	A	124	177	75.2
Type of Start			Direct On Line	
Standard Condenser Match - AC Motor - Per Fan				
Electrical Input Power	kW	0.64	0.64	0.64
Full Load Amps	A	3.02	3.02	3.02
OPTIONAL EXTRAS				
Electric Heating				
Stage of Reheat		3	3	3
Number of Elements		9	9	9
Rating	kW	22.5	22.5	22.5
Curent per Phase	A	34.19	34.19	34.19
Humidifier				
Capacity	kg/hr	8	8	8
Rating	kW	6.00	6.00	6.00
Full Load Amps	A	9.12	9.12	9.12
Evaporator Fan Options Larger Fan Motor - AC Motor - Per Fan				
Electrical Input Power	kW	4.6	N/A	N/A
Full Load Amps	A	8.12	N/A	N/A
Locked Rotor Amps	A	60.9	N/A	N/A
Standard Size Motor - EC Motor - Per Fan				
Electrical Input Power	kW	2.55	2.55	2.55
Full Load Amps	A	3.9	3.9	3.9
Condenser Fan Options Standard Condenser Motor - EC Motor - Per Fan				
Electrical Input Power	kW	0.73	0.73	0.73
Full Load Amps	A	3.3	3.3	3.3

Mechanical

(1) Entering air 24°C/45% RH ambient 35°C.
(2) Fan Gain / Fan power input based upon fan operating with design airflow at 25Pa ESP, These values may change with different ESP.
(3) With Standard forward curved fan motors; Machine weight includes a refrigerant charge.
(4) Backward curved EC fan options quote electrical power. All other options quote shaft power.
(5) For refrigerant charges, refer to ***Unit Refrigerant Charge (kg/Circuit)***.
(6) Based on air temperature of 15.5°C leaving the evaporator coil.
(7) Based upon low pressure hot water 82°C inlet / 71°C outlet. Air on 20°C. Refer to ***Low Pressure Hot Water***.

Electrical

(1) Values given for full function units (incl. electric heating, humidification and matched condenser) at 7°C evaporating and 54.4°C condensing with standard forward curved fan motors, for optional data, please contact Airedale.
(2) Values given for Cooling only units (incl. Compressor, evaporator fan and matched condenser) at 7°C evaporating and 54.4°C condensing, for optional data, please contact Airedale.
(3) Electrical input power relates to the maximum absorbed electrical power. Actual operating fan power input is shown in the mechanical data tables.

Technical Data Downflow Units X Type V35X - V35X2

Mechanical Data

			V35X-EZRE-1 CR50	V35X2-EZRE-1 CR50
Standard Condenser Match				
Capacity	(1)			
Nominal Cooling		kW	36.5	37.8
Capacity Steps			1	2
Dimensions - Wx D x H		mm	1835 x 750 x 1940	1835 x 750 x 1940
Weight	(3)	kg	474	516
Construction			Panels: Galvanised Sheet Steel, Epoxy Baked Powder Paint - Black, (RAL7021)	
Material/Colour			Frame: Aluminium Frame With Aluminium Corners	
Evaporator			Rifled Copper Tube/Turbulated Hydrophilic Coated Aluminium Fins	
Cooling/Dehum Stages			1/1	2/1
Evaporator Fan				
Motor - AC Motor			Centrifugal Forward Curved AC - Designed To 25Pa ESP	
Fan Transmission Type			Belt & Pulley	
Quantity			1	1
Motor Shaft Power	(4)	kW	4	4
Speed @ 25Pa / Maximum ESP		rpm	1440 / 1468	1440 / 1468
Maximum ESP		Pa	35	35
Nominal Airflow		m^3/s	3.30	3.30
Compressor - Scroll			Single	Tandem
Quantity			1	2
Oil Charge Volume (Total)		l	3.30	3.32
Oil Type			Polyol Ester	
Refrigeration	(5)		Single Circuit	
Refrigeration Control & Type			Thermostatic Expansion Valve (Optional EEV) / R410A	
Holding Charge			Inert Gas	
Connections				
Liquid (Sweat)		in	1/2	1/2
Discharge (Sweat)		in	7/8	7/8
Filtration			Disposable To ISO16890-ISO-C-75- 75mm	
Quantity			4	4
OPTIONAL EXTRAS				
Larger Condenser Match			CR65	CR65
Nominal Cooling		kW	34.4	37.3
Hot Gas Reheat	(6)			
Nom Heating (Gross)		kW	19.4	19.4
Electric Heating (Total)		kW	30.0	30.0
Humidifier				
Capacity		kg/hr	3.0 - 15.0	3.0 - 15.0
Feed/Drain			3/4" BSPF Braided Flexible Hose / 19mm Hose Connection	
Condensate Pump				
Head		m	5.0	5.0
Flow		l/m	10.8	10.8
Drain			10mm Stainless Steel Stub Connection	
Evaporator Fan Options:				
Larger Fan Motor - AC Motor			Centrifugal Forward Curved AC - Designed To 25Pa ESP	
Fan Transmission Type			Belt & Pulley	
Quantity			1	1
Motor Shaft Power	(4)	kW	5.5	5.5
Speed @ Maximum ESP		rpm	1695	1695
Maximum ESP		Pa	240	240
Optional Fan - EC Motor			Centrifugal Backward Curved EC - Designed To 25Pa ESP	
Fan Transmission Type			Direct Drive	
Quantity			2	2
Motor Shaft Power	(4)	kW	N/A	N/A
Speed @ 25Pa / Maximum ESP		rpm	1935 / 2165	1935 / 2165
Maximum ESP		Pa	260	260
Low Pressure Hot Water	(7)		Copper Tube / Aluminium Fin	
Capacity Gross		kW	29.9	29.9
Water Flow (Nominal)		l/s	0.67	0.67
LPHW Connection Sizes		mm	22	22

Technical Data Downflow Units X Type V35X - V35X2

Electrical Data

Standard Condenser Match - X		V35X-EZRE-1 CR50	V35X2-EZRE-1 CR50
Unit Data Full Function - X			
Nominal Run Amps	A	85.4	86.6
Maximum Start Amps	A	237.5	148.7
Recommended Mains Fuse Size	A	100	100
Unit Data Cooling Only - X			
Nominal Run Amps	A	39.8	41.0
Maximum Start Amps	A	191.9	103.1
Recommended Mains Fuse Size	A	50	50
Max Mains Incoming Cable Size	mm²	35	50
Mains Supply	V	380V / 3PH + N / 60HZ	
Control Circuit	VAC	24	24
Evaporator Fan - Motor Per Fan			
Electrical Input Power	kW	4.6	4.6
Full Load Amps	A	8.34	8.34
Locked Rotor Amps	A	58.38	58.38
Compressor - Per Compressor			
Quantity x Motor Size	kW	1 x 13.98	2 x 7.09
Nominal Run Amps	A	24.93	13.1
Locked Rotor Amps	A	177	75.2
Type of Start		Direct On Line	
Standard Condenser Match - AC Motor - Per Fan			
Electrical Input Power	kW	0.64	0.64
Full Load Amps	A	3.02	3.02
OPTIONAL EXTRAS			
Electric Heating			
Stage of Reheat		3	3
Number of Elements		12	12
Rating	kW	30	30
Curent per Phase	A	45.58	45.58
Humidifier			
Capacity	kg/hr	15	15
Rating	kW	11.25	11.25
Full Load Amps	A	17.09	17.09
Evaporator Fan Options Larger Fan Motor - AC Motor - Per Fan			
Electrical Input Power	kW	6.3	6.3
Full Load Amps	A	10.9	10.9
Locked Rotor Amps	A	69.8	69.8
Standard Size Motor - EC Motor - Per Fan			
Electrical Input Power	kW	2.55	2.55
Full Load Amps	A	3.9	3.9
Condenser Fan Options Standard Condenser Motor - EC Motor - Per Fan			
Electrical Input Power	kW	0.73	0.73
Full Load Amps	A	3.3	3.3

Mechanical

(1) Entering air 24°C/45% RH ambient 35°C.
(2) Fan Gain / Fan power input based upon fan operating with design airflow at 25Pa ESP, These values may change with different ESP.
(3) With Standard forward curved fan motors; Machine weight includes a refrigerant charge.
(4) Backward curved EC fan options quote electrical power. All other options quote shaft power.
(5) For refrigerant charges, refer to ***Unit Refrigerant Charge (kg/Circuit)***.
(6) Based on air temperature of 15.5°C leaving the evaporator coil.
(7) Based upon low pressure hot water 82°C inlet / 71°C outlet. Air on 20°C. Refer to ***Low Pressure Hot Water***.

Electrical

(1) Values given for full function units (incl. electric heating, humidification and matched condenser) at 7°C evaporating and 54.4°C condensing with standard forward curved fan motors, for optional data, please contact Airedale.
(2) Values given for Cooling only units (incl. Compressor, evaporator fan and matched condenser) at 7°C evaporating and 54.4°C condensing, for optional data, please contact Airedale.
(3) Electrical input power relates to the maximum absorbed electrical power. Actual operating fan power input is shown in the mechanical data tables.

Technical Data Downflow Units X Type V40X - V45X2

Mechanical Data

			V40X-EZRE-1	V40X2-EZRE-1	V45X2-EZRE-1
Standard Condenser Match			CR65	CR65	CR80
Capacity	(1)				
Nominal Cooling		kW	41.8	43.3	49.7
Capacity Steps			1	2	2
Dimensions - Wx D x H		mm	1835 x 750 x 1940	1835 x 750 x 1940	1835 x 750 x 1940
Weight	(3)	kg	497	525	563
Construction			Panels: Galvanised Sheet Steel, Epoxy Baked		
Material/Colour			Powder Paint - Black, (RAL7021)		
			Frame: Aluminium Frame With Aluminium Corners		
Evaporator			Rifled Copper Tube/Turbulated Hydrophilic Coated Aluminium Fins		
Cooling/Dehum Stages			1/1	2/1	2/1
Evaporator Fan					
Motor - AC Motor			Centrifugal Forward Curved AC - Designed To 25Pa ESP		
Fan Transmission Type			Belt & Pulley		
Quantity			1	1	1
Motor Shaft Power	(4)	kW	5.5	5.5	5.5
Speed @ 25Pa / Maximum ESP		rpm	1620 / 1622	1620 / 1622	1620 / 1622
Maximum ESP		Pa	25	25	25
Nominal Airflow		m^3/s	3.70	3.70	3.70
Compressor - Scroll			Single	Tandem	
Quantity			1	2	2
Oil Charge Volume (Total)		l	3.30	3.78	3.44
Oil Type			Polyol Ester		
Refrigeration	(5)		Single Circuit		
Refrigeration Control & Type			Thermostatic Expansion Valve (Optional EEV) / R410A		
Holding Charge			Inert Gas		
Connections					
Liquid (Sweat)		in	5/8	5/8	5/8
Discharge (Sweat)		in	1 1/8	7/8	7/8
Filtration			Disposable To ISO16890-ISO-C-75- 75mm		
Quantity			4	4	4
OPTIONAL EXTRAS					
Larger Condenser Match			CR80	CR80	CR105
Nominal Cooling		kW	42.2	43.8	50.0
Hot Gas Reheat	(6)				
Nom Heating (Gross)		kW	20.3	20.3	20.3
Electric Heating (Total)		kW	30.0	30.0	30.0
Humidifier					
Capacity		kg/hr	3.0 - 15.0	3.0 - 15.0	3.0 - 15.0
Feed/Drain			3/4" BSPF Braided Flexible Hose / 19mm Hose Connection		
Condensate Pump					
Head		m	5.0	5.0	5.0
Flow		l/m	10.8	10.8	10.8
Drain			10mm Stainless Steel Stub Connection		
Evaporator Fan Options:					
Larger Fan Motor - AC Motor			Centrifugal Forward Curved AC - Designed To 25Pa ESP		
Fan Transmission Type			Belt & Pulley		
Quantity			N/A	N/A	N/A
Motor Shaft Power	(4)	kW	N/A	N/A	N/A
Speed @ Maximum ESP		rpm	N/A	N/A	N/A
Maximum ESP		Pa	N/A	N/A	N/A
Optional Fan - EC Motor			Centrifugal Backward Curved EC - Designed To 25Pa ESP		
Fan Transmission Type			Direct Drive		
Quantity			2	2	2
Motor Shaft Power	(4)	kW	N/A	N/A	N/A
Speed @ 25Pa / Maximum ESP		rpm	2165 / 2165	2165 / 2165	2165 / 2165
Maximum ESP		Pa	25	25	25
Low Pressure Hot Water	(7)		Copper Tube / Aluminium Fin		
Capacity Gross		kW	31.5	31.5	31.5
Water Flow (Nominal)		l/s	0.70	0.70	0.70
LPHW Connection Sizes		mm	22	22	22

Technical Data Downflow Units X Type V40X - V45X2

Electrical Data

Standard Condenser Match - X		V40X-EZRE-1 CR65	V40X2-EZRE-1 CR65	V45X2-EZRE-1 CR80
Unit Data Full Function - X				
Nominal Run Amps	A	92.6	92.4	99.1
Maximum Start Amps	A	245.0	151.2	177.4
Recommended Mains Fuse Size	A	125	100	125
Unit Data Cooling Only - X				
Nominal Run Amps	A	47.0	46.8	53.6
Maximum Start Amps	A	199.4	105.6	131.8
Recommended Mains Fuse Size	A	63	63	63
Max Mains Incoming Cable Size	mm²	50	50	50
Mains Supply	V		380V / 3PH + N / 60HZ	
Control Circuit	VAC	24	24	24
Evaporator Fan - Motor Per Fan				
Electrical Input Power	kW	5.5	5.5	5.5
Full Load Amps	A	11.84	11.84	11.84
Locked Rotor Amps	A	91.2	91.2	91.2
Compressor - Per Compressor				
Quantity x Motor Size	kW	1 x 16.07	2 x 8.58	2 x 9.6
Nominal Run Amps	A	28.62	14.2	16.1
Locked Rotor Amps	A	181	73	94.3
Type of Start			Direct On Line	
Standard Condenser Match - AC Motor - Per Fan				
Electrical Input Power	kW	0.64	0.64	0.64
Full Load Amps	A	3.02	3.02	3.02
OPTIONAL EXTRAS				
Electric Heating				
Stage of Reheat		3	3	3
Number of Elements		12	12	12
Rating	kW	30	30	30
Curent per Phase	A	45.58	45.58	45.58
Humidifier				
Capacity	kg/hr	15	15	15
Rating	kW	11.25	11.25	11.25
Full Load Amps	A	17.09	17.09	17.09
Evaporator Fan Options Larger Fan Motor - AC Motor - Per Fan				
Electrical Input Power	kW	N/A	N/A	N/A
Full Load Amps	A	N/A	N/A	N/A
Locked Rotor Amps	A	N/A	N/A	N/A
Standard Size Motor - EC Motor - Per Fan				
Electrical Input Power	kW	2.55	2.55	2.55
Full Load Amps	A	3.9	3.9	3.9
Condenser Fan Options Standard Condenser Motor - EC Motor - Per Fan				
Electrical Input Power	kW	0.73	0.73	0.73
Full Load Amps	A	3.3	3.3	3.3

Mechanical

(1) Entering air 24°C/45% RH ambient 35°C.
(2) Fan Gain / Fan power input based upon fan operating with design airflow at 25Pa ESP, These values may change with different ESP.
(3) With Standard forward curved fan motors; Machine weight includes a refrigerant charge.
(4) Backward curved EC fan options quote electrical power. All other options quote shaft power.
(5) For refrigerant charges, refer to ***Unit Refrigerant Charge (kg/Circuit)***.
(6) Based on air temperature of 15.5°C leaving the evaporator coil.
(7) Based upon low pressure hot water 82°C inlet / 71°C outlet. Air on 20°C. Refer to ***Low Pressure Hot Water***.

Electrical

(1) Values given for full function units (incl. electric heating, humidification and matched condenser) at 7°C evaporating and 54.4°C condensing with standard forward curved fan motors, for optional data, please contact Airedale.
(2) Values given for Cooling only units (incl. Compressor, evaporator fan and matched condenser) at 7°C evaporating and 54.4°C condensing, for optional data, please contact Airedale.
(3) Electrical input power relates to the maximum absorbed electrical power. Actual operating fan power input is shown in the mechanical data tables.

Technical Data Downflow Units X Type V50X2 - V60X2

Mechanical Data

			V50X2-EZRE-1	V55X2-EZRE-1	V60X2-EZRE-1
Standard Condenser Match			CR80	CR80	CR80
Capacity	(1)				
Nominal Cooling		kW	53.0	60.1	67.0
Capacity Steps			2	2	2
Dimensions - Wx D x H		mm	2170 x 750 x 1940	2170 x 750 x 1940	2170 x 750 x 1940
Weight	(3)	kg	619	636	640
Construction			Panels: Galvanised Sheet Steel, Epoxy Baked		
Material/Colour			Powder Paint - Black, (RAL7021)		
			Frame: Aluminium Frame With Aluminium Corners		
Evaporator			Rifled Copper Tube/Turbulated Hydrophilic Coated Aluminium Fins		
Cooling/Dehum Stages			2/1	2/1	2/1
Evaporator Fan					
Motor - AC Motor			Centrifugal Forward Curved AC - Designed To 25Pa ESP		
Fan Transmission Type			Belt & Pulley		
Quantity			2	2	2
Motor Shaft Power	(4)	kW	3.0	3.0	3.0
Speed @ 25Pa / Maximum ESP		rpm	1243 / 1447	1243 / 1447	1278 / 1324
Maximum ESP		Pa	255	255	35
Nominal Airflow		m^3/s	4.20	4.20	4.60
Compressor - Scroll			Tandem		
Quantity			2	2	2
Oil Charge Volume (Total)		l	6.60	6.60	6.60
Oil Type			Polyol Ester		
Refrigeration	(5)		Single Circuit		
Refrigeration Control & Type			Thermostatic Expansion Valve (Optional EEV) / R410A		
Holding Charge			Inert Gas		
Connections					
Liquid (Sweat)		in	5/8	5/8	5/8
Discharge (Sweat)		in	1 3/8	1 3/8	1 3/8
Filtration			Disposable To ISO16890-ISO-C-75- 75mm		
Quantity			5	5	5
OPTIONAL EXTRAS					
Larger Condenser Match			CR105	CR105	CR105
Nominal Cooling		kW	53.6	61.2	68.6
Hot Gas Reheat	(6)				
Nom Heating (Gross)		kW	25.7	25.7	26.7
Electric Heating (Total)		kW	30.0	30.0	30.0
Humidifier					
Capacity		kg/hr	3.0 - 15.0	3.0 - 15.0	3.0 - 15.0
Feed/Drain			3/4" BSPF Braided Flexible Hose / 19mm Hose Connection		
Condensate Pump					
Head		m	5.0	5.0	5.0
Flow		l/m	10.8	10.8	10.8
Drain			10mm Stainless Steel Stub Connection		
Evaporator Fan Options:					
Larger Fan Motor - AC Motor			Centrifugal Forward Curved Belt & Pulley AC - Designed To 25Pa ESP		
Fan Transmission Type			Belt & Pulley		
Quantity			2	2	2
Motor Shaft Power	(4)	kW	4.0	4.0	4.0
Speed @ Maximum ESP		rpm	1495	1495	1499
Maximum ESP		Pa	305	305	230
Optional Fan - EC Motor			Centrifugal Backward Curved EC - Designed To 25Pa ESP		
Fan Transmission Type			Direct Drive		
Quantity			2	2	2
Motor Shaft Power	(4)	kW	N/A	N/A	N/A
Speed @ 25Pa / Maximum ESP		rpm	1370 / 1510	1370 / 1510	1510 / 1510
Maximum ESP		Pa	165	165	25
Low Pressure Hot Water	(7)		Copper Tube / Aluminium Fin		
Capacity Gross		kW	37.7	37.7	39.2
Water Flow (Nominal)		l/s	0.84	0.84	0.87
LPHW Connection Sizes		mm	22	22	22

Technical Data Downflow Units X Type V50X2 - V60X2

Electrical Data

Standard Condenser Match - X		V50X2-EZRE-1 CR80	V55X2-EZRE-1 CR80	V60X2-EZRE-1 CR80
Unit Data Full Function - X				
Nominal Run Amps	A	93.7	108.3	117.9
Maximum Start Amps	A	204.9	265.2	269.9
Recommended Mains Fuse Size	A	125	125	160
Unit Data Cooling Only - X				
Nominal Run Amps	A	48.1	62.7	72.3
Maximum Start Amps	A	159.3	219.6	224.4
Recommended Mains Fuse Size	A	63	80	80
Max Mains Incoming Cable Size	mm²	50	50	95
Mains Supply	V		380V / 3PH + N / 60HZ	
Control Circuit	VAC	24	24	24
Evaporator Fan - Motor Per Fan				
Electrical Input Power	kW	3.5	3.5	3.5
Full Load Amps	A	6.43	6.43	6.43
Locked Rotor Amps	A	45.01	45.01	45.01
Compressor - Per Compressor				
Quantity x Motor Size	kW	2 x 10.79	2 x 12.36	2 x 13.98
Nominal Run Amps	A	12.9	20.15	24.93
Locked Rotor Amps	A	124	177	177
Type of Start			Direct On Line	
Standard Condenser Match - AC Motor - Per Fan				
Electrical Input Power	kW	0.64	0.64	0.64
Full Load Amps	A	3.02	3.02	3.02
OPTIONAL EXTRAS				
Electric Heating				
Stage of Reheat		3	3	3
Number of Elements		12	12	12
Rating	kW	30	30	30
Curent per Phase	A	45.58	45.58	45.58
Humidifier				
Capacity	kg/hr	15	15	15
Rating	kW	11.25	11.25	11.25
Full Load Amps	A	17.09	17.09	17.09
Evaporator Fan Options Larger Fan Motor - AC Motor - Per Fan				
Electrical Input Power	kW	4.6	4.6	4.6
Full Load Amps	A	8.12	8.12	8.12
Locked Rotor Amps	A	60.9	60.9	60.9
Standard Size Motor - EC Motor - Per Fan				
Electrical Input Power	kW	3.1	3.1	3.1
Full Load Amps	A	4.8	4.8	4.8
Condenser Fan Options Standard Condenser Motor - EC Motor - Per Fan				
Electrical Input Power	kW	0.73	0.73	0.73
Full Load Amps	A	3.3	3.3	3.3

Mechanical

(1) Entering air 24°C/45% RH ambient 35°C.
(2) Fan Gain / Fan power input based upon fan operating with design airflow at 25Pa ESP, These values may change with different ESP.
(3) With Standard forward curved fan motors; Machine weight includes a refrigerant charge.
(4) Backward curved EC fan options quote electrical power. All other options quote shaft power.
(5) For refrigerant charges, refer to ***Unit Refrigerant Charge (kg/Circuit)***.
(6) Based on air temperature of 15.5°C leaving the evaporator coil.
(7) Based upon low pressure hot water 82°C inlet / 71°C outlet. Air on 20°C. Refer to ***Low Pressure Hot Water***.

Electrical

(1) Values given for full function units (incl. electric heating, humidification and matched condenser) at 7°C evaporating and 54.4°C condensing with standard forward curved fan motors, for optional data, please contact Airedale.
(2) Values given for Cooling only units (incl. Compressor, evaporator fan and matched condenser) at 7°C evaporating and 54.4°C condensing, for optional data, please contact Airedale.
(3) Electrical input power relates to the maximum absorbed electrical power. Actual operating fan power input is shown in the mechanical data tables.

Technical Data Downflow Units WX Type - 1

Performance Data

Cooling Capacity (1)		Condenser Entering/Leaving Temperature - Based on 5°C ΔT											
	Air On	25°C/30°C			30°C/35°C			35°C/40°C			40°C/45°C		
	(DB°C/%RH)	TC (kW)	SC (kW)	THR (kW)	TC (kW)	SC (kW)	THR (kW)	TC (kW)	SC (kW)	THR (kW)	TC (kW)	SC (kW)	THR (kW)
DF15WX-EZRE-1	22/50	16.9	15.4	22.3	16.9	15.4	22.3	16.7	15.2	22.2	15.9	14.8	22.0
	24/45	17.5	16.3	22.9	17.5	16.3	22.9	17.2	16.1	22.8	16.5	15.7	22.5
	26/40	18.0	17.5	23.4	18.0	17.5	23.4	17.8	17.3	23.3	17.0	16.8	23.1
DF17WX-EZRE-1	22/50	18.7	16.6	24.7	18.7	16.6	24.7	18.4	16.5	24.5	17.5	16.0	24.2
	24/45	19.3	17.8	25.3	19.3	17.8	25.3	19.0	17.6	25.2	18.2	17.1	24.8
	26/40	19.9	19.1	25.9	19.9	19.1	25.9	19.6	18.9	25.7	18.7	18.4	25.4
DF28WX-EZRE-1	22/50	26.2	26.2	35.1	26.2	26.2	35.1	25.8	25.8	35.0	24.6	24.6	34.4
	24/45	27.2	27.2	36.2	27.2	27.2	36.2	26.8	26.8	36.0	25.6	25.6	35.5
	26/40	28.2	28.2	37.3	28.2	28.2	37.3	27.9	27.9	37.1	26.6	26.6	36.7
DF31WX-EZRE-1	22/50	30.3	30.3	40.9	30.3	30.3	40.9	29.9	29.9	40.7	28.5	28.5	40.1
	24/45	31.5	31.5	42.1	31.5	31.5	42.1	31.1	31.1	41.9	29.7	29.7	41.4
	26/40	32.7	32.7	43.4	32.7	32.7	43.4	32.3	32.3	43.2	30.9	30.9	42.7
DF35WX-EZRE-1	22/50	35.4	35.4	47.4	35.4	35.4	47.4	34.8	34.8	47.1	33.1	33.1	46.3
	24/45	36.7	36.7	48.8	36.7	36.7	48.8	36.2	36.2	48.5	34.5	34.5	47.8
	26/40	38.1	38.1	50.3	38.1	38.1	50.3	37.6	37.6	50.1	36.0	36.0	49.4
DF40WX-EZRE-1	22/50	40.0	40.0	53.7	40.0	40.0	53.7	39.4	39.4	53.4	37.5	37.5	52.6
	24/45	41.5	41.5	55.3	41.5	41.5	55.3	40.8	40.8	55.0	39.0	39.0	54.2
	26/40	43.0	43.0	56.9	43.0	43.0	56.9	42.3	42.3	56.7	40.6	40.6	56.0
DF45WX-EZRE-1	22/50	44.7	43.6	59.9	44.7	43.6	59.9	44.1	43.2	59.6	41.9	41.8	58.6
	24/45	46.3	46.3	61.6	46.3	46.3	61.6	45.6	45.6	61.2	43.4	43.4	60.3
	26/40	47.8	47.8	63.3	47.8	47.8	63.3	47.1	47.1	62.9	45.0	45.0	62.0
DF50WX2-EZRE-1	22/50	50.9	49.3	68.7	50.9	49.3	68.7	50.0	48.8	68.3	47.6	47.2	67.4
	24/45	52.7	52.7	70.6	52.7	52.7	70.6	51.9	51.9	70.2	49.4	49.4	69.3
	26/40	54.5	54.5	72.6	54.5	54.5	72.6	53.6	53.6	72.2	51.2	51.2	71.2
DF55WX2-EZRE-1	22/50	58.6	53.9	79.6	58.6	53.9	79.6	57.6	53.3	79.2	55.0	51.7	78.1
	24/45	60.6	58.0	81.7	60.6	58.0	81.7	59.5	57.3	81.3	56.9	55.7	80.2
	26/40	62.4	62.2	83.7	62.4	62.2	83.7	61.3	61.3	83.2	58.6	58.6	82.1
DF60WX2-EZRE-1	22/50	66.4	60.2	90.1	66.4	60.2	90.1	65.2	59.5	89.5	62.0	57.7	88.2
	24/45	68.5	64.6	92.4	68.5	64.6	92.4	67.2	63.8	91.7	64.1	61.9	90.4
	26/40	70.6	69.2	94.6	70.6	69.2	94.6	69.2	68.4	93.9	66.0	66.0	92.6

Operating Limits

Indoor Air Temperature	+18°C to +28°C
Indoor RH%	+40% to +55%
Condenser Minimum Entering Temperature °C	+25°C
Condenser Maximum Leaving Water Temperature °C	+45°C

TC = Total Cooling
SC = Sensible Cooling
THR = Total Heat Rejection

(1) All data quoted is gross
(2) Interpolate for water temperatures between those quoted, do not extrapolate
(3) Water flow rate (l/s) = THR/(4.19*ΔT) at 100% Water; for glycol use refer to Ethylene Glycol Correction Factors section

Technical Data Downflow Units WX Type -1

Noise Data

	Sound Measurement		Overall dB(A)	Frequency (Hz) dB 63	125	250	500	1000	2000	4000	8000
DF15WX	Discharge Air	Power	73	70	75	72	69	68	67	62	57
	Return Air	Power	66	73	74	71	62	55	52	53	42
	Case Breakout	Power	62	70	72	63	57	54	49	51	44
	Sound @ 3m	Pressure	47	55	57	49	43	39	34	36	29
DF17WX	Discharge Air	Power	77	74	78	76	73	72	70	66	61
	Return Air	Power	70	77	78	75	66	59	55	56	46
	Case Breakout	Power	65	73	76	67	61	57	52	53	46
	Sound @ 3m	Pressure	50	59	61	52	46	43	38	39	31
DF28WX	Discharge Air	Power	87	77	80	79	81	81	82	79	76
	Return Air	Power	68	77	71	63	66	63	58	56	47
	Case Breakout	Power	70	80	70	63	67	67	60	57	48
	Sound @ 3m	Pressure	55	65	56	49	53	52	45	42	34
DF31WX	Discharge Air	Power	91	78	84	83	85	84	85	83	80
	Return Air	Power	71	77	75	66	69	66	61	60	52
	Case Breakout	Power	73	80	74	67	70	69	63	60	52
	Sound @ 3m	Pressure	58	66	59	52	55	55	48	46	38
DF35WX	Discharge Air	Power	90	77	83	82	87	83	84	82	79
	Return Air	Power	71	76	74	65	71	65	60	59	51
	Case Breakout	Power	72	78	73	66	71	68	61	60	51
	Sound @ 3m	Pressure	58	65	58	51	57	53	47	45	37
DF40WX	Discharge Air	Power	92	80	86	85	89	86	86	85	81
	Return Air	Power	73	78	76	67	73	67	62	62	53
	Case Breakout	Power	75	80	75	68	74	70	64	62	54
	Sound @ 3m	Pressure	60	65	61	54	59	56	49	48	40
DF45WX	Discharge Air	Power	92	80	86	85	89	86	86	85	81
	Return Air	Power	73	78	76	67	73	67	62	62	54
	Case Breakout	Power	75	80	75	68	74	70	64	62	54
	Sound @ 3m	Pressure	60	65	61	54	59	56	49	48	40
DF50WX2	Discharge Air	Power	89	78	84	86	82	83	84	81	76
	Return Air	Power	69	76	75	69	66	64	59	58	48
	Case Breakout	Power	71	79	74	69	67	68	61	58	49
	Sound @ 3m	Pressure	56	64	59	55	52	53	47	43	34
DF55WX2	Discharge Air	Power	89	78	84	86	82	83	84	81	76
	Return Air	Power	70	77	75	69	67	64	60	58	48
	Case Breakout	Power	71	79	74	69	68	68	62	58	49
	Sound @ 3m	Pressure	57	64	59	55	53	53	47	44	35
DF60WX2	Discharge Air	Power	91	80	85	89	84	85	86	83	79
	Return Air	Power	71	79	76	72	69	66	62	60	51
	Case Breakout	Power	73	81	75	73	69	69	63	60	52
	Sound @ 3m	Pressure	58	66	60	58	55	54	49	46	37

(1) dB(A) is the overall sound level, measured on the A scale
(2) All sound data measured at nominal conditions, Discharge Air, Return air and case breakout is sound power.

Technical Data Downflow Units WX Type DF15WX - DF31WX

Mechanical Data

			DF15WX-EZRE-1	DF17WX-EZRE-1	DF28WX-EZRE-1	DF31WX-EZRE-1
Capacity	(1)					
Nominal Cooling		kW	17.5	19.3	27.2	31.5
Total Heat of Rejection		kW	22.9	25.3	36.2	42.1
Capacity Steps			1	1	1	1
Dimensions - W x D x H		mm	990 x 670 x 1940	990 x 670 x 1940	990 x 670 x 1940	990 x 670 x 1940
Weight	(3)	kg	267 / 269	271 / 273	470 / 476	475 / 481
Construction Material/Colour			Panels: Galvanised Sheet Steel, Epoxy Baked Powder Paint - Black, (RAL7021) Frame: Aluminium Frame With Aluminium Corners			
Evaporator			Rifled Copper Tube / Turbulated Hydrophilic Coated Aluminium Fins			
Cooling/Dehum Stages			1/1	1/1	1/1	1/1
Condenser			Stainless Steel Brazed Plate			
Water Volume		l	2.0	2.5	6.1	6.1
Evaporator Fan Motor - AC Motor			Centrifugal Forward Curved AC - Designed To 25Pa ESP			
Fan Transmission Type			Direct Drive		Belt & Pulley	
Quantity			1	1	1	1
Motor Shaft Power	(4)	kW	N/A	N/A	2.2	4
Speed @ 25Pa / Maximum ESP		rpm	N/A	N/A	871 / 909	1008 /1171
Maximum ESP		Pa	120	34	75	265
Nominal Airflow		m^3/s	1.20	1.40	2.40	2.80
Compressor - Scroll			Single			
Quantity			1	1	1	1
Oil Charge Volume (Total)		l	1.66	1.89	3.30	3.30
Oil Type			Polyol Ester			
Refrigeration	(5)		Single Circuit			
Refrigeration Control & Type			Thermostatic Expansion Valve (Optional EEV) / R410A			
Charge (Total)		kg	2.6	2.6	5.3	5.3
Connections						
Water Inlet / Outlet		mm	22	28	35	35
Condensate Drain Hose		mm	19	19	19	19
Filtration			Disposable To ISO16890-ISO-C-75 - 50mm		Disposable To ISO16890-ISO-C-75 - 75mm	
Quantity			2	2	3	3
OPTIONAL EXTRAS						
Electric Heating (Total)		kW	7.5	7.5	20.0	20.0
Humidifier						
Capacity		kg/hr	0.6 - 3.0	0.6 - 3.0	1.6 - 8.0	1.6 - 8.0
Feed/Drain			3/4" BSPF Braided Flexible Hose / 19mm Hose Connection			
Condensate Pump						
Head		m	8	8	5	5
Flow		l/m	5	5	10.8	10.8
Drain			10mm Stainless Steel Stub Connection			
Evaporator Fan Options:						
Larger Fan Motor - AC Motor			N/A	N/A	Centrifugal Forward Curved AC - Designed To 25Pa ESP	
Fan Transmission Type			N/A	N/A	Belt & Pulley	N/A
Quantity			N/A	N/A	1&1	N/A
Motor Shaft Power	(4)	kW	N/A	N/A	3&4	N/A
Speed @ 25Pa / Maximum ESP		rpm			1144 / 1439	N/A
Maximum ESP		Pa			362 / 722	N/A
Optional Fan - EC Motor			Centrifugal Backward Curved EC - Designed To 25Pa ESP			
Fan Transmission Type			Direct Drive			
Quantity			1	1	2	2
Motor Shaft Power	(4)	kW	N/A	N/A	N/A	N/A
Speed @ 25Pa / Maximum ESP		rpm	1310 / 1560	1515 / 1560	1570 / 2165	1775 / 2165
Maximum ESP		Pa	195	45	595	390
Low Pressure Hot Water	(7)		Copper Tube / Aluminium Fin			
Capacity Gross		kW	12.5	13.3	21.3	22.7
Water Flow (Nominal)		l/s	0.28	0.30	0.48	0.51
LPHW Connection Sizes		mm	22	22	22	22
Threaded Connection						
Brass Male Taper		in	3/4	1	1 1/4	1 1/4

Technical Data Downflow Units WX Type DF15WX - DF31WX

Electrical Data

		DF15WX-EZRE-1	DF17WX-EZRE-1	DF28WX-EZRE-1	DF31WX-EZRE-1
Unit Data Full Function - WX					
Nominal Run Amps	A	31.4	32.3	52.4	63.2
Maximum Start Amps	A	94.4	94.4	163.5	220.0
Recommended Mains Fuse Size	A	40	40	63	80
Unit Data Cooling Only - WX					
Nominal Run Amps	A	20.0	20.9	18.2	29.0
Maximum Start Amps	A	83.0	83.0	129.3	185.8
Recommended Mains Fuse Size	A	25	25	25	40
Max Mains Incoming Cable Size	mm²	35	35	35	35
Mains Supply	V		380V / 3PH + N / 60HZ		
Control Circuit	VAC	24	24	24	24
Evaporator Fan - Motor Per Fan					
Electrical Input Power	kW	1.9	1.9	2.6	4.6
Full Load Amps	A	7.8	7.8	4.83	8.34
Locked Rotor Amps	A	19.5	19.5	33.81	58.38
Compressor - Per Compressor					
Quantity x Motor Size	kW	1 x 6.7	1 x 7.09	1 x 10.79	1 x 12.36
Nominal Run Amps	A	12.2	13.1	12.9	20.15
Locked Rotor Amps	A	75.2	75.2	124	177
Type of Start			Direct On Line		
Standard Condenser Match - AC Motor - Per Fan					
Electrical Input Power	kW	0.64	0.64	0.64	0.64
Full Load Amps	A	3.02	3.02	3.02	3.02
OPTIONAL EXTRAS					
Electric Heating					
Stage of Reheat		1	1	3	3
Number of Elements		3	3	8	8
Rating	kW	7.5	7.5	20	20
Curent per Phase	A	11.40	11.40	34.19	34.19
Humidifier					
Capacity	kg/hr	3	3	8	8
Rating	kW	2.25	2.25	6.00	6.00
Full Load Amps	A	3.42	3.42	9.12	9.12
Evaporator Fan Options Larger Fan Motor - AC Motor - Per Fan					
Electrical Input Power	kW	N/A	N/A	3.5	N/A
Full Load Amps	A	N/A	N/A	6.18	N/A
Locked Rotor Amps	A	N/A	N/A	43.3	N/A
Standard Size Motor - EC Motor - Per Fan					
Electrical Input Power	kW	1	1	2.55	2.55
Full Load Amps	A	1.85	1.85	3.9	3.9
Condenser Fan Options Standard Condenser Motor - EC Motor - Per Fan					
Electrical Input Power	kW	0.73	0.73	0.73	0.73
Full Load Amps	A	3.3	3.3	3.3	3.3

Mechanical

(1) Entering air 24°C/45% RH condenser water in / out: 30°C/35°C.
(2) Fan Gain / Fan power input based upon fan operating with design airflow at 25Pa ESP, These values may change with different ESP.
(3) With Standard forward curved fan motors; Machine weight includes a refrigerant charge /Operating weight includes calculated water volume.
(4) Backward curved EC fan options quote electrical power. All other options quote shaft power.
(5) For refrigerant charges, refer to ***Unit Refrigerant Charge (kg/Circuit)***.
(6) Based on air temperature of 15.5°C leaving the evaporator coil.
(7) Based upon low pressure hot water 82°C inlet / 71°C outlet. Air on 20°C. Refer to ***Low Pressure Hot Water (Optional Extra) - X & WX Models***.

Electrical

(1) Values given for full function units (incl. electric heating, humidification and matched condenser) at 7°C evaporating and 54.4°C condensing with standard forward curved fan motors, for optional data, please contact Airedale.
(2) Values given for Cooling only units (incl. Compressor, evaporator fan and matched condenser) at 7°C evaporating and 54.4°C condensing, for optional data, please contact Airedale.
(3) Electrical input power relates to the maximum absorbed electrical power. Actual operating fan power input is shown in the mechanical data tables.

Technical Data Downflow Units WX Type DF35WX - DF45WX

Mechanical Data

			DF35WX-EZRE-1	DF40WX-EZRE-1	DF45WX-EZRE-1
Capacity	(1)				
Nominal Cooling		kW	36.7	41.5	46.3
Total Heat of Rejection		kW	48.8	55.3	61.6
Capacity Steps			1	1	1
Dimensions - W x D x H		mm	1835 x 750 x 1940	1835x 750 x 1940	1835 x 750 x 1940
Weight	(3)	kg	537 / 543	565 / 571	640 / 650
Construction			Panels: Galvanised Sheet Steel, Epoxy Baked		
Material/Colour			Powder Paint - Black, (RAL7021)		
			Frame: Aluminium Frame With Aluminium Corners		
Evaporator			Rifled Copper Tube / Turbulated Hydrophilic Coated Aluminium Fins		
Cooling/Dehum Stages			1/1	1/1	1/1
Condenser			Stainless Steel Brazed Plate		
Water Volume		l	6.1	6.1	9.9
Evaporator Fan					
Motor - AC Motor			Centrifugal Forward Curved AC - Designed To 25Pa ESP		
Fan Transmission Type			Belt & Pulley		
Quantity			1	1	1
Motor Shaft Power	(4)	kW	4	5.5	5.5
Speed @ 25Pa / Maximum ESP		rpm	980 /1078	1094 / 1186	1094 / 1186
Maximum ESP		Pa	165	175	175
Nominal Airflow		m^3/s	3.30	3.70	3.70
Compressor - Scroll			Single		
Quantity			1	1	1
Oil Charge Volume (Total)		l	3.30	3.30	6.70
Oil Type			Polyol Ester		
Refrigeration	(5)		Single Circuit		
Refrigeration Control & Type			Thermostatic Expansion Valve (Optional EEV) / R410A		
Charge (Total)		kg	6.0	6.0	8.7
Connections					
Water Inlet / Outlet		mm	35	35	42
Condensate Drain Hose		mm	19	19	19
Filtration			Disposable To ISO16890- ISO-C-75 - 75mm		
Quantity			3	3	3
OPTIONAL EXTRAS					
Electric Heating (Total)		kW	20.0	20.0	20.0
Humidifier					
Capacity		kg/hr	3.0 - 15.0	3.0 - 15.0	3.0 - 15.0
Feed/Drain			3/4" BSPF Braided Flexible Hose / 19mm Hose Connection		
Condensate Pump					
Head		m	5	5	5
Flow		l/m	10.8	10.8	10.8
Drain			10mm Stainless Steel Stub Connection		
Evaporator Fan Options:					
Larger Fan Motor - AC Motor			Centrifugal Forward Curved AC - Designed To 25Pa ESP		
Fan Transmission Type			Belt & Pulley	N/A	N/A
Quantity			1	N/A	N/A
Motor Shaft Power	(4)	kW	5.5	N/A	N/A
Speed @ Maximum ESP		rpm	1196	N/A	N/A
Maximum ESP		Pa	322	N/A	N/A
Optional Fan - EC Motor			Centrifugal Backward Curved DD EC - Designed To 25Pa ESP		
Fan Transmission Type			Direct Drive		
Quantity			2	2	2
Motor Shaft Power	(4)	kW	N/A	N/A	N/A
Speed @ 25Pa / Maximum ESP		rpm	1895 / 2165	2135 / 2165	2135 / 2165
Maximum ESP		Pa	285	70	70
Low Pressure Hot Water	(7)		Copper Tube / Aluminium Fin		
Capacity Gross		kW	30.0	31.5	31.5
Water Flow (Nominal)		l/s	0.67	0.70	0.70
LPHW Connection Sizes		mm	22	22	22
Threaded Connection					
Brass Male Taper		in	1 1/4	1 1/4	1 1/2

Technical Data Downflow Units WX Type DF35WX - DF45WX

Electrical Data

		DF35WX-EZRE-1	DF40WX-EZRE-1	DF45WX-EZRE-1
Unit Data Full Function - WX				
Nominal Run Amps	A	68.0	75.1	77.9
Maximum Start Amps	A	220.0	227.5	243.5
Recommended Mains Fuse Size	A	80	100	100
Unit Data Cooling Only - WX				
Nominal Run Amps	A	33.8	41.0	43.7
Maximum Start Amps	A	185.8	193.3	209.3
Recommended Mains Fuse Size	A	50	50	63
Max Mains Incoming Cable Size	mm²	35	35	35
Mains Supply	V		380V / 3PH + N / 60HZ	
Control Circuit	VAC	24	24	24
Evaporator Fan - Motor Per Fan				
Electrical Input Power	kW	4.6	5.5	5.5
Full Load Amps	A	8.34	11.84	11.84
Locked Rotor Amps	A	58.38	91.2	91.2
Compressor - Per Compressor				
Quantity x Motor Size	kW	1 x 13.98	1 x 16.07	1 x 18.09
Nominal Run Amps	A	24.93	28.62	31.4
Locked Rotor Amps	A	177	181	197
Type of Start			Direct On Line	
Standard Condenser Match - AC Motor - Per Fan				
Electrical Input Power	kW	0.64	0.64	0.64
Full Load Amps	A	3.02	3.02	3.02
OPTIONAL EXTRAS				
Electric Heating				
Stage of Reheat		3	3	3
Number of Elements		8	8	8
Rating	kW	20	20	20
Curent per Phase	A	34.19	34.19	34.19
Humidifier				
Capacity	kg/hr	15	15	15
Rating	kW	11.25	11.25	11.25
Full Load Amps	A	17.09	17.09	17.09
Evaporator Fan Options Larger Fan Motor - AC Motor - Per Fan				
Electrical Input Power	kW	6.3	N/A	N/A
Full Load Amps	A	10.9	N/A	N/A
Locked Rotor Amps	A	69.8	N/A	N/A
Standard Size Motor - EC Motor - Per Fan				
Electrical Input Power	kW	2.55	2.55	2.55
Full Load Amps	A	3.9	3.9	3.9
Condenser Fan Options Standard Condenser Motor - EC Motor - Per Fan				
Electrical Input Power	kW	0.73	0.73	0.73
Full Load Amps	A	3.3	3.3	3.3

Mechanical

(1) Entering air 24°C/45% RH condenser water in / out: 30°C/35°C.
(2) Fan Gain / Fan power input based upon fan operating with design airflow at 25Pa ESP, These values may change with different ESP.
(3) With Standard forward curved fan motors; Machine weight includes a refrigerant charge /Operating weight includes calculated water volume.
(4) Backward curved EC fan options quote electrical power. All other options quote shaft power.
(5) For refrigerant charges, refer to ***Unit Refrigerant Charge (kg/Circuit)***.
(6) Based on air temperature of 15.5°C leaving the evaporator coil.
(7) Based upon low pressure hot water 82°C inlet / 71°C outlet. Air on 20°C. Refer to ***Low Pressure Hot Water (Optional Extra) - X & WX Models***.

Electrical

(1) Values given for full function units (incl. electric heating, humidification and matched condenser) at 7°C evaporating and 54.4°C condensing with standard forward curved fan motors, for optional data, please contact Airedale.
(2) Values given for Cooling only units (incl. Compressor, evaporator fan and matched condenser) at 7°C evaporating and 54.4°C condensing, for optional data, please contact Airedale.
(3) Electrical input power relates to the maximum absorbed electrical power. Actual operating fan power input is shown in the mechanical data tables.

Technical Data Downflow Units WX Type DF50WX2 - DF60WX2

Mechanical Data

			DF50WX2-EZRE-1	DF55WX2-EZRE-1	DF60WX2-EZRE-1
Capacity	(1)				
Nominal Cooling		kW	52.7	60.6	68.5
Total Heat of Rejection		kW	70.6	81.7	92.4
Capacity Steps			2	2	2
Dimensions - W x D x H		mm	2170 x 750 x 1940	2170x 750 x 1940	2170x 750 x 1940
Weight	(3)	kg	712 / 722	731 / 741	731 / 741
Construction Material/Colour			Panels: Galvanised Sheet Steel, Epoxy Baked Powder Paint - Black, (RAL7021) Frame: Aluminium Frame With Aluminium Corners		
Evaporator			Rifled Copper Tube / Turbulated Hydrophilic Coated Aluminium Fins		
Cooling/Dehum Stages			2/1	2/1	2/1
Condenser			Stainless Steel Brazed Plate		
Water Volume		l	9.9	9.9	9.9
Evaporator Fan Motor - AC Motor			Centrifugal Forward Curved AC - Designed To 25Pa ESP		
Fan Transmission Type			Belt & Pulley		
Quantity			2	2	2
Motor Shaft Power	(4)	kW	2.2	2.2	3
Speed @ 25Pa / Maximum ESP		rpm	1167 / 1170	1167 / 1170	1307 / 1311
Maximum ESP		Pa	35	35	75
Nominal Airflow		m^3/s	4.20	4.20	4.60
Compressor - Scroll			Tandem		
Quantity			2	2	2
Oil Charge Volume (Total)		l	6.60	6.60	6.60
Oil Type			Polyol Ester		
Refrigeration	(5)		Single Circuit		
Refrigeration Control & Type			Thermostatic Expansion Valve (Optional EEV) / R410A		
Charge (Total)		kg	9.0	9.7	9.8
Connections					
Water Inlet / Outlet		mm	42	42	42
Condensate Drain Hose		mm	19	19	19
Filtration			Disposable To ISO16890- ISO-C-75 - 75mm		
Quantity			4	4	4
OPTIONAL EXTRAS					
Electric Heating (Total)		kW	30.0	30.0	30.0
Humidifier					
Capacity		kg/hr	3.0 - 15.0	3.0 - 15.0	3.0 - 15.0
Feed/Drain			3/4" BSPF Braided Flexible Hose / 19mm Hose Connection		
Condensate Pump					
Head		m	5	5	5
Flow		l/m	10.8	10.8	10.8
Drain			10mm Stainless Steel Stub Connection		
Evaporator Fan Options:					
Optional Fan - EC Motor			Centrifugal Backward Curved EC - Designed To 25Pa ESP		
Fan Transmission Type			Direct Drive		
Quantity			2	2	2
Motor Shaft Power	(4)	kW	N/A	N/A	N/A
Speed @ 25Pa / Maximum ESP		rpm	1265 / 1510	1265 / 1510	1390 / 1510
Maximum ESP		Pa	320	320	185
Low Pressure Hot Water	(7)		Copper Tube / Aluminium Fin		
Capacity Gross		kW	30.00	31.50	31.50
Water Flow (Nominal)		l/s	0.67	0.70	0.70
LPHW Connection Sizes		mm	22	22	22
Threaded Connection					
Brass Male Taper		in	1 1/4	1 1/4	1 1/2

Technical Data Downflow Units WX Type DF50WX2 - DF60WX2

Electrical Data

		DF50WX2-EZRE-1	DF55WX2-EZRE-1	DF60WX2-EZRE-1
Unit Data Full Function - WX				
Nominal Run Amps	A	81.4	96.0	108.8
Maximum Start Amps	A	192.6	252.9	260.9
Recommended Mains Fuse Size	A	100	125	125
Unit Data Cooling Only - WX				
Nominal Run Amps	A	35.9	50.5	63.2
Maximum Start Amps	A	147.0	207.3	215.3
Recommended Mains Fuse Size	A	40	63	80
Max Mains Incoming Cable Size	mm²	35	50	50
Mains Supply	V		380V / 3PH + N / 60HZ	
Control Circuit	VAC	24	24	24
Evaporator Fan - Motor Per Fan				
Electrical Input Power	kW	2.6	2.6	3.5
Full Load Amps	A	4.83	4.83	6.43
Locked Rotor Amps	A	33.81	33.81	45.01
Compressor - Per Compressor				
Quantity x Motor Size	kW	2 x 10.79	2 x 12.36	2 x 13.98
Nominal Run Amps	A	12.9	20.15	24.93
Locked Rotor Amps	A	124	177	177
Type of Start			Direct On Line	
Standard Condenser Match - AC Motor - Per Fan				
Electrical Input Power	kW	0.64	0.64	0.64
Full Load Amps	A	3.02	3.02	3.02
OPTIONAL EXTRAS				
Electric Heating				
Stage of Reheat		3	3	3
Number of Elements		12	12	12
Rating	kW	30	30	30
Curent per Phase	A	45.58	45.58	45.58
Humidifier				
Capacity	kg/hr	15	15	15
Rating	kW	11.25	11.25	11.25
Full Load Amps	A	17.09	17.09	17.09
Evaporator Fan Options Larger Fan Motor - AC Motor - Per Fan				
Electrical Input Power	kW	3.5	3.5	3.5
Full Load Amps	A	6.18	6.18	8.12
Locked Rotor Amps	A	43.3	43.3	60.9
Standard Size Motor - EC Motor - Per Fan				
Electrical Input Power	kW	3.1	3.1	3.1
Full Load Amps	A	4.8	4.8	4.8
Condenser Fan Options Standard Condenser Motor - EC Motor - Per Fan				
Electrical Input Power	kW	0.73	0.73	0.73
Full Load Amps	A	3.3	3.3	3.3

Mechanical

(1) Entering air 24°C/45% RH condenser water in / out: 30°C/35°C.
(2) Fan Gain / Fan power input based upon fan operating with design airflow at 25Pa ESP, These values may change with different ESP.
(3) With Standard forward curved fan motors; Machine weight includes a refrigerant charge /Operating weight includes calculated water volume.
(4) Backward curved EC fan options quote electrical power. All other options quote shaft power.
(5) For refrigerant charges, refer to ***Unit Refrigerant Charge (kg/Circuit)***.
(6) Based on air temperature of 15.5°C leaving the evaporator coil.
(7) Based upon low pressure hot water 82°C inlet / 71°C outlet. Air on 20°C. Refer to ***Low Pressure Hot Water (Optional Extra) - X & WX Models***.

Electrical

(1) Values given for full function units (incl. electric heating, humidification and matched condenser) at 7°C evaporating and 54.4°C condensing with standard forward curved fan motors, for optional data, please contact Airedale.
(2) Values given for Cooling only units (incl. Compressor, evaporator fan and matched condenser) at 7°C evaporating and 54.4°C condensing, for optional data, please contact Airedale.
(3) Electrical input power relates to the maximum absorbed electrical power. Actual operating fan power input is shown in the mechanical data tables.

Technical Data Upflow Units WX Type - 1

Performance Data

Cooling Capacity (1)		Condenser Entering/Leaving Temperature - Based on 5°C ΔT											
	Air On	25°C/30°C			30°C/35°C			35°C/40°C			40°C/45°C		
	(DB°C/%RH)	TC (kW)	SC (kW)	THR (kW)	TC (kW)	SC (kW)	THR (kW)	TC (kW)	SC (kW)	THR (kW)	TC (kW)	SC (kW)	THR (kW)
V15WX-EZRE-1	22/50	16.6	15.3	21.9	16.6	15.3	21.9	16.4	15.2	21.8	15.6	14.8	21.6
	24/45	17.1	16.2	22.5	17.1	16.2	22.5	16.9	16.1	22.4	16.1	15.6	22.2
	26/40	17.6	17.5	23.0	17.6	17.5	23.0	17.4	17.3	22.9	16.6	16.6	22.7
V17WX-EZRE-1	22/50	18.3	16.6	24.3	18.3	16.6	24.3	18.0	16.4	24.2	17.2	16.0	23.8
	24/45	18.9	17.7	24.9	18.9	17.7	24.9	18.6	17.5	24.7	17.8	17.1	24.4
	26/40	19.4	19.1	25.4	19.4	19.1	25.4	19.1	18.9	25.3	18.3	18.3	25.0
V28WX-EZRE-1	22/50	26.6	26.6	35.6	26.6	26.6	35.6	26.2	26.2	35.4	24.9	24.9	34.9
	24/45	27.6	27.6	36.7	27.6	27.6	36.7	27.3	27.3	36.5	26.0	26.0	36.0
	26/40	28.7	28.7	37.9	28.7	28.7	37.9	28.4	28.4	37.7	27.2	27.2	37.2
V31WX-EZRE-1	22/50	30.8	30.8	41.4	30.8	30.8	41.4	30.4	30.4	41.2	29.0	29.0	40.6
	24/45	32.0	32.0	42.7	32.0	32.0	42.7	31.6	31.6	42.5	30.2	30.2	41.9
	26/40	33.3	33.3	44.1	33.3	33.3	44.1	32.9	32.9	43.9	31.5	31.5	43.4
V31WX2-EZRE-1	22/50	32.4	32.4	43.0	32.4	32.4	43.0	32.0	32.0	42.8	30.5	30.5	42.4
	24/45	33.7	33.7	44.3	33.7	33.7	44.3	33.2	33.2	44.2	31.8	31.8	43.8
	26/40	35.0	35.0	45.7	35.0	35.0	45.7	34.5	34.5	45.5	33.1	33.1	45.2
V35WX-EZRE-1	22/50	35.9	35.9	48.0	35.9	35.9	48.0	35.4	35.4	47.7	33.6	33.6	46.9
	24/45	37.3	37.3	49.5	37.3	37.3	49.5	36.8	36.8	49.2	35.1	35.1	48.4
	26/40	38.8	38.8	51.1	38.8	38.8	51.1	38.3	38.3	50.9	36.7	36.7	50.2
V35WX2-EZRE-1	22/50	37.2	37.2	49.1	37.2	37.2	49.1	36.7	36.7	48.9	35.0	35.0	48.2
	24/45	38.7	38.7	50.6	38.7	38.7	50.6	38.2	38.2	50.4	36.5	36.5	49.7
	26/40	40.2	40.2	52.1	40.2	40.2	52.1	39.7	39.7	51.9	38.2	38.2	51.4

Operating Limits

Indoor Air Temperature	+18°C to +28°C
Indoor RH%	+40% to +55%
Condenser Minimum Entering Temperature °C	+25°C
Condenser Maximum Leaving Water Temperature °C	+45°C

TC = Total Cooling
SC = Sensible Cooling
THR = Total Heat Rejection

(1) All data quoted is gross
(2) Interpolate for water temperatures between those quoted, do not extrapolate
(3) Water flow rate (l/s) = THR/(4.19*ΔT) at 100% Water; for glycol use refer to Ethylene Glycol Correction Factors section

Technical Data Upflow Units WX Type

Performance Data

Cooling Capacity (1)		Condenser Entering/Leaving Temperature - Based on 5°C ΔT											
	Air On	25°C/30°C			30°C/35°C			35°C/40°C			40°C/45°C		
	(DB°C/%RH)	TC (kW)	SC (kW)	THR (kW)	TC (kW)	SC (kW)	THR (kW)	TC (kW)	SC (kW)	THR (kW)	TC (kW)	SC (kW)	THR (kW)
V40WX-EZRE-1	22/50	40.6	40.6	54.4	40.6	40.6	54.4	39.9	39.9	54.1	38.0	38.0	53.2
	24/45	42.2	42.2	56.1	42.2	42.2	56.1	41.5	41.5	55.8	39.6	39.6	55.0
	26/40	43.8	43.8	57.8	43.8	43.8	57.8	43.2	43.2	57.5	41.4	41.4	56.9
V40WX2-EZRE-1	22/50	42.2	42.2	56.3	42.2	42.2	56.3	41.6	41.6	56.0	39.7	39.7	55.5
	24/45	43.8	43.8	57.9	43.8	43.8	57.9	43.1	43.1	57.7	41.3	41.3	57.3
	26/40	45.4	45.4	59.7	45.4	45.4	59.7	44.8	44.8	59.5	43.0	43.0	59.1
V45WX2-EZRE-1	22/50	48.4	46.8	64.2	48.4	46.8	64.2	47.7	46.4	64.0	45.6	45.0	63.2
	24/45	50.0	50.0	66.0	50.0	50.0	66.0	49.3	49.3	65.7	47.3	47.3	65.0
	26/40	51.7	51.7	67.8	51.7	51.7	67.8	51.0	51.0	67.5	49.0	49.0	66.9
V50WX2-EZRE-1	22/50	51.7	50.8	69.5	51.7	50.8	69.5	50.8	50.2	69.1	48.3	48.3	68.2
	24/45	53.6	53.6	71.6	53.6	53.6	71.6	52.7	52.7	71.2	50.2	50.2	70.2
	26/40	55.5	55.5	73.6	55.5	55.5	73.6	54.6	54.6	73.2	52.1	52.1	72.2
V55WX2-EZRE-1	22/50	59.5	55.5	80.6	59.5	55.5	80.6	58.5	54.9	80.2	55.8	53.3	79.1
	24/45	61.6	59.7	82.8	61.6	59.7	82.8	60.5	59.1	82.3	57.8	57.3	81.2
	26/40	63.5	63.5	84.9	63.5	63.5	84.9	62.4	62.4	84.4	59.7	59.7	83.2
V60WX2-EZRE-1	22/50	67.5	62.1	91.2	67.5	62.1	91.2	66.2	61.3	90.6	63.0	59.4	89.2
	24/45	69.7	66.6	93.6	69.7	66.6	93.6	68.4	65.8	93.0	65.1	63.8	91.6
	26/40	71.8	71.4	95.9	71.8	71.4	95.9	70.5	70.5	95.3	67.2	67.2	93.9

Operating Limits

Indoor Air Temperature	+18°C to +28°C
Indoor RH%	+40% to +55%
Condenser Minimum Entering Temperature °C	+25°C
Condenser Maximum Leaving Water Temperature °C	+45°C

TC = Total Cooling
SC = Sensible Cooling
THR = Total Heat Rejection

(1) All data quoted is gross
(2) Interpolate for water temperatures between those quoted, do not extrapolate
(3) Water flow rate (l/s) = THR/(4.19*ΔT) at 100% Water; for glycol use refer to Ethylene Glycol Correction Factors section

Technical Data Upflow Units WX Type -1

Noise Data

Sound Measurement			Overall dB(A)	Frequency (Hz) dB 63	125	250	500	1000	2000	4000	8000
V15WX	Discharge Air	Power	74	71	76	73	70	69	68	63	58
	Return Air	Power	62	68	72	63	56	56	49	48	42
	Case Breakout	Power	62	68	72	63	56	56	49	48	42
	Sound @ 3m	Pressure	47	53	57	48	41	42	35	34	27
V17WX	Discharge Air	Power	78	75	79	77	74	73	71	67	62
	Return Air	Power	65	72	75	67	59	59	53	51	44
	Case Breakout	Power	65	72	75	67	59	59	53	51	44
	Sound @ 3m	Pressure	50	57	61	52	44	44	38	36	30
V28WX	Discharge Air	Power	90	102	95	86	84	85	81	81	78
	Return Air	Power	79	89	80	79	76	75	68	63	57
	Case Breakout	Power	79	89	80	79	76	75	68	63	57
	Sound @ 3m	Pressure	64	75	65	65	62	60	53	49	42
V31WX	Discharge Air	Power	93	105	96	89	86	88	84	84	82
	Return Air	Power	81	92	80	82	78	77	70	66	60
	Case Breakout	Power	81	92	80	82	78	77	70	66	60
	Sound @ 3m	Pressure	66	77	66	67	64	62	56	51	45
V31WX2	Discharge Air	Power	93	105	96	89	86	88	84	84	82
	Return Air	Power	81	91	80	82	77	77	70	66	60
	Case Breakout	Power	81	91	80	82	77	77	70	66	60
	Sound @ 3m	Pressure	66	76	66	67	63	62	55	51	46
V35WX	Discharge Air	Power	92	111	98	90	87	82	82	83	80
	Return Air	Power	81	97	82	84	80	72	69	66	58
	Case Breakout	Power	81	97	82	84	80	72	69	66	58
	Sound @ 3m	Pressure	67	82	68	69	66	58	54	51	44
V35WX2	Discharge Air	Power	92	111	98	90	87	82	82	83	80
	Return Air	Power	81	97	82	84	79	72	69	66	59
	Case Breakout	Power	81	97	82	84	79	72	69	66	59
	Sound @ 3m	Pressure	66	82	68	69	65	58	54	51	45

(1) dB(A) is the overall sound level, measured on the A scale
(2) All sound data measured at nominal conditions, Discharge Air, Return air and case breakout is sound power.

Technical Data Upflow Units WX Type -1

Noise Data

Sound Measurement			Overall dB(A)	Frequency (Hz) dB 63	125	250	500	1000	2000	4000	8000
V40WX	Discharge Air	Power	94	113	99	92	89	84	85	85	83
	Return Air	Power	83	98	84	85	82	74	71	68	61
	Case Breakout	Power	83	98	84	85	82	74	71	68	61
	Sound @ 3m	Pressure	68	84	69	71	67	59	56	53	46
V40WX2	Discharge Air	Power	94	113	99	92	89	84	85	85	83
	Return Air	Power	82	98	84	85	81	74	71	68	62
	Case Breakout	Power	82	98	84	85	81	74	71	68	62
	Sound @ 3m	Pressure	68	85	69	71	66	59	56	53	47
V45WX2	Discharge Air	Power	94	113	99	92	89	84	85	85	83
	Return Air	Power	83	98	84	85	83	74	71	68	62
	Case Breakout	Power	83	98	84	85	83	74	71	68	62
	Sound @ 3m	Pressure	69	84	69	71	68	59	57	53	47
V50WX2	Discharge Air	Power	97	115	109	95	92	84	86	84	80
	Return Air	Power	84	99	93	86	83	74	71	66	58
	Case Breakout	Power	84	99	93	86	83	74	71	66	58
	Sound @ 3m	Pressure	70	85	79	72	68	60	57	52	43
V55WX2	Discharge Air	Power	97	115	109	95	92	84	86	84	80
	Return Air	Power	84	99	93	86	83	74	72	66	58
	Case Breakout	Power	84	99	93	86	83	74	72	66	58
	Sound @ 3m	Pressure	70	85	79	72	68	60	57	52	43
V60WX2	Discharge Air	Power	98	116	110	97	93	86	87	86	82
	Return Air	Power	86	102	94	89	85	76	73	69	60
	Case Breakout	Power	86	102	94	89	85	76	73	69	60
	Sound @ 3m	Pressure	72	87	80	75	70	61	59	54	46

(1) dB(A) is the overall sound level, measured on the A scale
(2) All sound data measured at nominal conditions, Discharge Air, Return air and case breakout is sound power.

Technical Data Upflow Units WX Type V15WX - V17WX

Mechanical Data

			V15WX-EZRE-1	V17WX-EZRE-1
Capacity	(1)			
Nominal Cooling		kW	17.1	18.9
Total Heat of Rejection		kW	22.5	24.9
Capacity Steps			1	1
Dimensions - W x D x H		mm	990 x 670 x 1940	990 x 670 x 1940
Weight	(3)	kg	261 / 263	264 / 266
Construction			Panels: Galvanised Sheet Steel, Epoxy Baked Powder Paint - Black, (RAL7021)	
Material/Colour			Frame: Aluminium Frame With Aluminium Corners	
Evaporator			Rifled Copper Tube / Turbulated Hydrophilic Coated Aluminium Fins	
Cooling/Dehum Stages			1/1	1/1
Condenser			Stainless Steel Brazed Plate	
Water Volume		l	2.0	2.5
Evaporator Fan				
Motor - AC Motor			Centrifugal Forward Curved AC - Designed To 25Pa ESP	
Fan Transmission Type			Direct Drive	
Quantity			1	1
Motor Shaft Power	(4)	kW	N/A	N/A
Speed @ 25Pa / Maximum ESP		rpm	N/A	N/A
Maximum ESP		Pa	127	42
Nominal Airflow		m³/s	1.20	1.40
Compressor - Scroll			Single	
Quantity			1	1
Oil Charge Volume (Total)		l	1.66	1.89
Oil Type			Polyol Ester	
Refrigeration	(5)		Single Circuit	
Refrigeration Control & Type			Thermostatic Expansion Valve (Optional EEV) / R410A	
Charge (Total)		kg	2.6	2.6
Connections				
Water Inlet / Outlet		mm	22	28
Condensate Drain Hose		mm	19	19
Filtration			DisposableTo ISO16890- ISO-C-75 - 50mm	
Quantity			2	2
OPTIONAL EXTRAS				
Electric Heating (Total)		kW	7.5	7.5
Humidifier				
Capacity		kg/hr	0.6 - 3.0	0.6 - 3.0
Feed/Drain			3/4" BSPF Braided Flexible Hose / 19mm Hose Connection	
Condensate Pump				
Head		m	8	8
Flow		l/m	5	5
Drain			10mm Stainless Steel Stub Connection	
Evaporator Fan Options:				
Larger Fan Motor - AC Motor				
Fan Transmission Type			N/A	N/A
Quantity			N/A	N/A
Motor Shaft Power	(4)	kW	N/A	N/A
Speed @ Maximum ESP		rpm	N/A	N/A
Maximum ESP		Pa	N/A	N/A
Optional Fan - EC Motor			Centrifugal Backward Curved EC - Designed To 25Pa ESP	
Fan Transmission Type			Direct Drive	
Quantity			1	1
Motor Shaft Power	(4)	kW	N/A	N/A
Speed @ 25Pa / Maximum ESP		rpm	1330 / 1560	1560 / 1560
Maximum ESP		Pa	165	25
Low Pressure Hot Water	(7)		Copper Tube / Aluminium Fin	
Capacity Gross		kW	12.7	13.7
Water Flow (Nominal)		l/s	0.28	0.31
LPHW Connection Sizes		mm	22	22
Threaded Connection				
Brass Male Taper		in	3/4	1

Technical Data Upflow Units WX Type V15WX - V17WX

Electrical Data

		V15WX-EZRE-1	V17WX-EZRE-1
Unit Data Full Function - WX			
Nominal Run Amps	A	31.4	32.3
Maximum Start Amps	A	94.4	94.4
Recommended Mains Fuse Size	A	40	40
Unit Data Cooling Only - WX			
Nominal Run Amps	A	20.0	20.9
Maximum Start Amps	A	83.0	83.0
Recommended Mains Fuse Size	A	25	25
Max Mains Incoming Cable Size	mm²	35	35
Mains Supply	V	380V / 3PH + N / 60HZ	
Control Circuit	VAC	24	24
Evaporator Fan - Motor Per Fan			
Electrical Input Power	kW	1.9	1.9
Full Load Amps	A	7.8	7.8
Locked Rotor Amps	A	19.5	19.5
Compressor - Per Compressor			
Quantity x Motor Size	kW	1 x 6.7	1 x 7.09
Nominal Run Amps	A	12.2	13.1
Locked Rotor Amps	A	75.2	75.2
Type of Start		Direct On Line	
Standard Condenser Match - AC Motor - Per Fan			
Electrical Input Power	kW	0.64	0.64
Full Load Amps	A	3.02	3.02
OPTIONAL EXTRAS			
Electric Heating			
Stage of Reheat		1	1
Number of Elements		3	3
Rating	kW	7.5	7.5
Curent per Phase	A	11.40	11.40
Humidifier			
Capacity	kg/hr	3	3
Rating	kW	2.25	2.25
Full Load Amps	A	3.42	3.42
Evaporator Fan Options Larger Fan Motor - AC Motor - Per Fan			
Electrical Input Power	kW	N/A	N/A
Full Load Amps	A	N/A	N/A
Locked Rotor Amps	A	N/A	N/A
Standard Size Motor - EC Motor - Per Fan			
Electrical Input Power	kW	1	1
Full Load Amps	A	1.85	1.85
Condenser Fan Options Standard Condenser Motor - EC Motor - Per Fan			
Electrical Input Power	kW	0.73	0.73
Full Load Amps	A	3.3	3.3

Mechanical

(1) Entering air 24°C/45% RH condenser water in / out: 30°C/35°C.
(2) Fan Gain / Fan power input based upon fan operating with design airflow at 25Pa ESP, These values may change with different ESP.
(3) With Standard forward curved fan motors; Machine weight includes a refrigerant charge /Operating weight includes calculated water volume.
(4) Backward curved EC fan options quote electrical power. All other options quote shaft power.
(5) For refrigerant charges, refer to ***Unit Refrigerant Charge (kg/Circuit)***.
(6) Based on air temperature of 15.5°C leaving the evaporator coil.
(7) Based upon low pressure hot water 82°C inlet / 71°C outlet. Air on 20°C. Refer to ***Low Pressure Hot Water (Optional Extra) - X & WX Models***.

Electrical

(1) Values given for full function units (incl. electric heating, humidification and matched condenser) at 7°C evaporating and 54.4°C condensing with standard forward curved fan motors, for optional data, please contact Airedale.
(2) Values given for Cooling only units (incl. Compressor, evaporator fan and matched condenser) at 7°C evaporating and 54.4°C condensing, for optional data, please contact Airedale.
(3) Electrical input power relates to the maximum absorbed electrical power. Actual operating fan power input is shown in the mechanical data tables.

Technical Data Upflow Units WX Type V28WX - V31WX2

Mechanical Data

			V28WX-EZRE-1	V31WX-EZRE-1	V31WX2-EZRE-1
Capacity	(1)				
Nominal Cooling		kW	27.6	32.0	33.7
Total Heat of Rejection		kW	36.7	42.7	44.3
Capacity Steps			1	1	2
Dimensions - W x D x H		mm	1460x 750 x 1940	1460x 750 x 1940	1460x 750 x 1940
Weight	(3)	kg	468 / 474	468 / 474	500 / 506
Construction			Panels: Galvanised Sheet Steel, Epoxy Baked Powder Paint - Black, (RAL7021)		
Material/Colour			Frame: Aluminium Frame With Aluminium Corners		
Evaporator			Rifled Copper Tube / Turbulated Hydrophilic Coated Aluminium Fins		
Cooling/Dehum Stages			1/1	1/1	2/1
Condenser			Stainless Steel Brazed Plate		
Water Volume		l	6.1	6.1	6.1
Evaporator Fan					
Motor - AC Motor			Centrifugal Forward Curved AC - Designed To 25Pa ESP		
Fan Transmission Type			Belt & Pulley		
Quantity			1	1	1
Motor Shaft Power	(4)	kW	3.0	4.0	4.0
Speed @ 25Pa / Maximum ESP		rpm	1420 / 1552	1600 / 1612	1600 / 1612
Maximum ESP		Pa	160	35	35
Nominal Airflow		m^3/s	2.40	2.80	2.80
Compressor - Scroll			Single		Tandem
Quantity			1	1	2
Oil Charge Volume (Total)		l	3.30	3.30	3.32
Oil Type			Polyol Ester		
Refrigeration	(5)		Single Circuit		
Refrigeration Control & Type			Thermostatic Expansion Valve (Optional EEV) / R410A		
Charge (Total)		kg	5.3	5.3	5.2
Connections					
Water Inlet / Outlet		mm	35	35	35
Condensate Drain Hose		mm	19	19	19
Filtration			Disposable To ISO16890- ISO-C-75 - 75mm		
Quantity			3	3	3
OPTIONAL EXTRAS					
Electric Heating (Total)		kW	22.5	22.5	22.5
Humidifier					
Capacity		kg/hr	1.6 - 8.0	1.6 - 8.0	1.6 - 8.0
Feed/Drain			3/4" BSPF Braided Flexible Hose / 19mm Hose Connection		
Condensate Pump					
Head		m	5	5	5
Flow		l/m	10.8	10.8	10.8
Drain			10mm Stainless Steel Stub Connection		
Evaporator Fan Options:					
Larger Fan Motor - AC Motor			Centrifugal Forward Curved AC - Designed To 25Pa ESP		
Fan Transmission Type			Belt & Pulley		
Quantity			1	N/A	N/A
Motor Shaft Power	(4)	kW	4.0	N/A	N/A
Speed @ Maximum ESP		rpm	1910	N/A	N/A
Maximum ESP		Pa	470	N/A	N/A
Optional Fan - EC Motor			Centrifugal Backward Curved EC - Designed To 25Pa ESP		
Fan Transmission Type			Direct Drive		
Quantity			2	2	2
Motor Shaft Power	(4)	kW	N/A	N/A	N/A
Speed @ 25Pa / Maximum ESP		rpm	1700 / 2165	1935 / 2165	1935 / 2165
Maximum ESP		Pa	440	225	225
Low Pressure Hot Water	(7)		Copper Tube / Aluminium Fin		
Capacity Gross		kW	21.7	23.2	23.2
Water Flow (Nominal)		l/s	0.48	0.52	0.52
LPHW Connection Sizes		mm	22	22	22
Threaded Connection					
Brass Male Taper		in	1 1/4	1 1/4	1 1/4

Technical Data Upflow Units WX Type V28WX - V31WX2

Electrical Data

		V28WX-EZRE-1	V31WX-EZRE-1	V31WX2-EZRE-1
Unit Data Full Function - WX				
Nominal Run Amps	A	54.0	63.2	67.4
Maximum Start Amps	A	165.1	220.0	130.4
Recommended Mains Fuse Size	A	63	80	80
Unit Data Cooling Only - WX				
Nominal Run Amps	A	19.8	29.0	33.2
Maximum Start Amps	A	130.9	185.8	96.2
Recommended Mains Fuse Size	A	25	40	40
Max Mains Incoming Cable Size	mm²	35	35	35
Mains Supply	V		380V / 3PH + N / 60HZ	
Control Circuit	VAC	24	24	24
Evaporator Fan - Motor Per Fan				
Electrical Input Power	kW	3.5	4.6	4.6
Full Load Amps	A	6.43	8.34	8.34
Locked Rotor Amps	A	45.01	58.38	58.38
Compressor - Per Compressor				
Quantity x Motor Size	kW	1 x 10.79	1 x 12.36	2 x 6.7
Nominal Run Amps	A	12.9	20.15	12.2
Locked Rotor Amps	A	124	177	75.2
Type of Start			Direct On Line	
Standard Condenser Match - AC Motor - Per Fan				
Electrical Input Power	kW	0.64	0.64	0.64
Full Load Amps	A	3.02	3.02	3.02
OPTIONAL EXTRAS				
Electric Heating				
Stage of Reheat		3	3	3
Number of Elements		9	9	9
Rating	kW	22.5	22.5	22.5
Curent per Phase	A	34.19	34.19	34.19
Humidifier				
Capacity	kg/hr	8	8	8
Rating	kW	6.00	6.00	6.00
Full Load Amps	A	9.12	9.12	9.12
Evaporator Fan Options Larger Fan Motor - AC Motor - Per Fan				
Electrical Input Power	kW	4.6	N/A	N/A
Full Load Amps	A	8.12	N/A	N/A
Locked Rotor Amps	A	60.9	N/A	N/A
Standard Size Motor - EC Motor - Per Fan				
Electrical Input Power	kW	2.55	2.55	2.55
Full Load Amps	A	3.9	3.9	3.9
Condenser Fan Options Standard Condenser Motor - EC Motor - Per Fan				
Electrical Input Power	kW	0.73	0.73	0.73
Full Load Amps	A	3.3	3.3	3.3

Mechanical

(1) Entering air 24°C/45% RH condenser water in / out: 30°C/35°C.
(2) Fan Gain / Fan power input based upon fan operating with design airflow at 25Pa ESP, These values may change with different ESP.
(3) With Standard forward curved fan motors; Machine weight includes a refrigerant charge /Operating weight includes calculated water volume.
(4) Backward curved EC fan options quote electrical power. All other options quote shaft power.
(5) For refrigerant charges, refer to ***Unit Refrigerant Charge (kg/Circuit)***.
(6) Based on air temperature of 15.5°C leaving the evaporator coil.
(7) Based upon low pressure hot water 82°C inlet / 71°C outlet. Air on 20°C. Refer to ***Low Pressure Hot Water (Optional Extra) - X & WX Models***.

Electrical

(1) Values given for full function units (incl. electric heating, humidification and matched condenser) at 7°C evaporating and 54.4°C condensing with standard forward curved fan motors, for optional data, please contact Airedale.
(2) Values given for Cooling only units (incl. Compressor, evaporator fan and matched condenser) at 7°C evaporating and 54.4°C condensing, for optional data, please contact Airedale.
(3) Electrical input power relates to the maximum absorbed electrical power. Actual operating fan power input is shown in the mechanical data tables.

Technical Data Upflow Units WX Type V35WX - V35WX2

Mechanical Data

			V35WX-EZRE-1	V35WX2-EZRE-1
Capacity	(1)			
Nominal Cooling		kW	37.3	38.7
Total Heat of Rejection		kW	49.5	50.6
Capacity Steps			1	2
Dimensions - W x D x H		mm	1835 x 750 x 1940	1835 x 750 x 1940
Weight	(3)	kg	534 / 540	576 / 582
Construction			Panels: Galvanised Sheet Steel, Epoxy Baked Powder Paint - Black, (RAL7021)	
Material/Colour			Frame: Aluminium Frame With Aluminium Corners	
Evaporator			Rifled Copper Tube / Turbulated Hydrophilic Coated Aluminium Fins	
Cooling/Dehum Stages			1/1	2/1
Condenser			Stainless Steel Brazed Plate	
Water Volume		l	6.1	6.1
Evaporator Fan				
Motor - AC Motor			Centrifugal Forward Curved AC - Designed To 25Pa ESP	
Fan Transmission Type			Belt & Pulley	
Quantity			1	1
Motor Shaft Power	(4)	kW	4.0	4.0
Speed @ 25Pa / Maximum ESP		rpm	1440 / 1468	1440 / 1468
Maximum ESP		Pa	35	35
Nominal Airflow		m^3/s	3.30	3.30
Compressor - Scroll			Single	Tandem
Quantity			1	2
Oil Charge Volume (Total)		l	3.30	3.32
Oil Type			Polyol Ester	
Refrigeration	(5)		Single Circuit	
Refrigeration Control & Type			Thermostatic Expansion Valve (Optional EEV) / R410A	
Charge (Total)		kg	6.0	5.9
Connections				
Water Inlet / Outlet		mm	35	35
Condensate Drain Hose		mm	19	19
Filtration			Disposable To ISO16890- ISO-C-75 - 75mm	
Quantity			4	4
OPTIONAL EXTRAS				
Electric Heating (Total)		kW	30.0	30.0
Humidifier				
Capacity		kg/hr	3.0 - 15.0	3.0 - 15.0
Feed/Drain			3/4" BSPF Braided Flexible Hose / 19mm Hose Connection	
Condensate Pump				
Head		m	5	5
Flow		l/m	10.8	10.8
Drain			10mm Stainless Steel Stub Connection	
Evaporator Fan Options:				
Larger Fan Motor - AC Motor			Centrifugal Forward Curved AC - Designed To 25Pa ESP	
Fan Transmission Type			Belt & Pulley	
Quantity			1	1
Motor Shaft Power	(4)	kW	5.5	5.5
Speed @ Maximum ESP		rpm	1695	1695
Maximum ESP		Pa	240	240
Optional Fan - EC Motor			Centrifugal Backward Curved EC - Designed To 25Pa ESP	
Fan Transmission Type			Direct Drive	
Quantity			2	2
Motor Shaft Power	(4)	kW	N/A	N/A
Speed @ 25Pa / Maximum ESP		rpm	1935 / 2165	1935 / 2165
Maximum ESP		Pa	260	260
Low Pressure Hot Water	(7)		Copper Tube / Aluminium Fin	
Capacity Gross		kW	29.9	29.9
Water Flow (Nominal)		l/s	0.67	0.67
LPHW Connection Sizes		mm	22	22
Threaded Connection				
Brass Male Taper		in	1 1/4	1 1/4

Technical Data Upflow Units WX Type V35WX - V35WX2

Electrical Data

		V35WX-EZRE-1	V35WX2-EZRE-1
Unit Data Full Function - WX			
Nominal Run Amps	A	79.4	80.5
Maximum Start Amps	A	231.4	142.7
Recommended Mains Fuse Size	A	100	100
Unit Data Cooling Only - WX			
Nominal Run Amps	A	33.8	35.0
Maximum Start Amps	A	185.8	97.1
Recommended Mains Fuse Size	A	50	40
Max Mains Incoming Cable Size	mm²	35	35
Mains Supply	V	380V / 3PH + N / 60HZ	
Control Circuit	VAC	24	24
Evaporator Fan - Motor Per Fan			
Electrical Input Power	kW	4.6	4.6
Full Load Amps	A	8.34	8.34
Locked Rotor Amps	A	58.38	58.38
Compressor - Per Compressor			
Quantity x Motor Size	kW	1 x 13.98	2 x 7.09
Nominal Run Amps	A	24.93	13.1
Locked Rotor Amps	A	177	75.2
Type of Start		Direct On Line	
Standard Condenser Match - AC Motor - Per Fan			
Electrical Input Power	kW	0.64	0.64
Full Load Amps	A	3.02	3.02
OPTIONAL EXTRAS			
Electric Heating			
Stage of Reheat		3	3
Number of Elements		12	12
Rating	kW	30	30
Curent per Phase	A	45.58	45.58
Humidifier			
Capacity	kg/hr	15	15
Rating	kW	11.25	11.25
Full Load Amps	A	17.09	17.09
Evaporator Fan Options Larger Fan Motor - AC Motor - Per Fan			
Electrical Input Power	kW	6.3	6.3
Full Load Amps	A	10.9	10.9
Locked Rotor Amps	A	69.8	69.8
Standard Size Motor - EC Motor - Per Fan			
Electrical Input Power	kW	2.55	2.55
Full Load Amps	A	3.9	3.9
Condenser Fan Options Standard Condenser Motor - EC Motor - Per Fan			
Electrical Input Power	kW	0.73	0.73
Full Load Amps	A	3.3	3.3

Mechanical

(1) Entering air 24°C/45% RH condenser water in / out: 30°C/35°C.
(2) Fan Gain / Fan power input based upon fan operating with design airflow at 25Pa ESP, These values may change with different ESP.
(3) With Standard forward curved fan motors; Machine weight includes a refrigerant charge /Operating weight includes calculated water volume.
(4) Backward curved EC fan options quote electrical power. All other options quote shaft power.
(5) For refrigerant charges, refer to ***Unit Refrigerant Charge (kg/Circuit)***.
(6) Based on air temperature of 15.5°C leaving the evaporator coil.
(7) Based upon low pressure hot water 82°C inlet / 71°C outlet. Air on 20°C. Refer to ***Low Pressure Hot Water (Optional Extra) - X & WX Models***.

Electrical

(1) Values given for full function units (incl. electric heating, humidification and matched condenser) at 7°C evaporating and 54.4°C condensing with standard forward curved fan motors, for optional data, please contact Airedale.
(2) Values given for Cooling only units (incl. Compressor, evaporator fan and matched condenser) at 7°C evaporating and 54.4°C condensing, for optional data, please contact Airedale.
(3) Electrical input power relates to the maximum absorbed electrical power. Actual operating fan power input is shown in the mechanical data tables.

Technical Data Upflow Units WX Type V40WX - V45WX2

Mechanical Data

			V40WX-EZRE-1	V40WX2-EZRE-1	V45WX2-EZRE-1
Capacity	(1)				
Nominal Cooling		kW	42.2	43.8	50.0
Total Heat of Rejection		kW	56.1	57.9	66.0
Capacity Steps			1	2	2
Dimensions - W x D x H		mm	1835 x 750 x 1940	1835 x 750 x 1940	1835 x 750 x 1940
Weight	(3)	kg	562 / 568	589 / 595	652 / 662
Construction			Panels: Galvanised Sheet Steel, Epoxy Baked Powder Paint - Black, (RAL7021)		
Material/Colour			Frame: Aluminium Frame With Aluminium Corners		
Evaporator			Rifled Copper Tube / Turbulated Hydrophilic Coated Aluminium Fins		
Cooling/Dehum Stages			1/1	2/1	2/1
Condenser			Stainless Steel Brazed Plate		
Water Volume		l	6.1	6.1	9.9
Evaporator Fan					
Motor - AC Motor			Centrifugal Forward Curved AC - Designed To 25Pa ESP		
Fan Transmission Type			Belt & Pulley		
Quantity			1	1	1
Motor Shaft Power	(4)	kW	5.5	5.5	5.5
Speed @ 25Pa / Maximum ESP		rpm	1620 / 1622	1620 / 1622	1620 / 1622
Maximum ESP		Pa	25	25	25
Nominal Airflow		m^3/s	3.70	3.70	3.70
Compressor - Scroll			Single	Tandem	Tandem
Quantity			1	2	2
Oil Charge Volume (Total)		l	3.30	3.78	3.44
Oil Type			Polyol Ester		
Refrigeration	(5)		Single Circuit		
Refrigeration Control & Type			Thermostatic Expansion Valve (Optional EEV) / R410A		
Charge (Total)		kg	6.0	6.1	8.7
Connections					
Water Inlet / Outlet		mm	35	35	42
Condensate Drain Hose		mm	19	19	19
Filtration			Disposable To ISO16890- ISO-C-75 - 75mm		
Quantity			4	4	4
OPTIONAL EXTRAS					
Electric Heating (Total)		kW	30.0	30.0	30.0
Humidifier					
Capacity		kg/hr	3.0 - 15.0	3.0 - 15.0	3.0 - 15.0
Feed/Drain			3/4" BSPF Braided Flexible Hose / 19mm Hose Connection		
Condensate Pump					
Head		m	5	5	5
Flow		l/m	10.8	10.8	10.8
Drain			10mm Stainless Steel Stub Connection		
Evaporator Fan Options:					
Larger Fan Motor - AC Motor			Centrifugal Forward Curved AC - Designed To 25Pa ESP		
Fan Transmission Type			Belt & Pulley		N/A
Quantity			N/A	N/A	N/A
Motor Shaft Power	(4)	kW	N/A	N/A	N/A
Speed @ Maximum ESP		rpm	N/A	N/A	N/A
Maximum ESP		Pa	N/A	N/A	N/A
Optional Fan - EC Motor			Centrifugal Backward Curved EC - Designed To 25Pa ESP		
Fan Transmission Type			Direct Drive		
Quantity			2	2	2
Motor Shaft Power	(4)	kW	N/A	N/A	N/A
Speed @ 25Pa / Maximum ESP		rpm	2165 / 2165	2165 / 2165	2165 / 2165
Maximum ESP		Pa	25	25	25
Low Pressure Hot Water	(7)		Copper Tube / Aluminium Fin		
Capacity Gross		kW	31.5	31.5	31.5
Water Flow (Nominal)		l/s	0.70	0.70	0.70
LPHW Connection Sizes		mm	22	22	22
Threaded Connection					
Brass Male Taper		in	1 1/4	1 1/4	1 1/2

Technical Data Upflow Units WX Type V40WX - V45WX2

Electrical Data

		V40WX-EZRE-1	V40WX2-EZRE-1	V45WX2-EZRE-1
Unit Data Full Function - WX				
Nominal Run Amps	A	86.5	86.3	90.1
Maximum Start Amps	A	238.9	145.1	168.3
Recommended Mains Fuse Size	A	100	100	100
Unit Data Cooling Only - WX				
Nominal Run Amps	A	41.0	40.7	44.5
Maximum Start Amps	A	193.3	99.5	122.7
Recommended Mains Fuse Size	A	50	50	50
Max Mains Incoming Cable Size	mm²	35	35	50
Mains Supply	V		380V / 3PH + N / 60HZ	
Control Circuit	VAC	24	24	24
Evaporator Fan - Motor Per Fan				
Electrical Input Power	kW	5.5	5.5	5.5
Full Load Amps	A	11.84	11.84	11.84
Locked Rotor Amps	A	91.2	91.2	91.2
Compressor - Per Compressor				
Quantity x Motor Size	kW	1 x 16.07	2 x 8.58	2 x 9.6
Nominal Run Amps	A	28.62	14.2	16.1
Locked Rotor Amps	A	181	73	94.3
Type of Start			Direct On Line	
Standard Condenser Match - AC Motor - Per Fan				
Electrical Input Power	kW	0.64	0.64	0.64
Full Load Amps	A	3.02	3.02	3.02
OPTIONAL EXTRAS				
Electric Heating				
Stage of Reheat		3	3	3
Number of Elements		12	12	12
Rating	kW	30	30	30
Curent per Phase	A	45.58	45.58	45.58
Humidifier				
Capacity	kg/hr	15	15	15
Rating	kW	11.25	11.25	11.25
Full Load Amps	A	17.09	17.09	17.09
Evaporator Fan Options Larger Fan Motor - AC Motor - Per Fan				
Electrical Input Power	kW	N/A	N/A	N/A
Full Load Amps	A	N/A	N/A	N/A
Locked Rotor Amps	A	N/A	N/A	N/A
Standard Size Motor - EC Motor - Per Fan				
Electrical Input Power	kW	2.55	2.55	2.55
Full Load Amps	A	3.9	3.9	3.9
Condenser Fan Options Standard Condenser Motor - EC Motor - Per Fan				
Electrical Input Power	kW	0.73	0.73	0.73
Full Load Amps	A	3.3	3.3	3.3

Mechanical

(1) Entering air 24°C/45% RH condenser water in / out: 30°C/35°C.
(2) Fan Gain / Fan power input based upon fan operating with design airflow at 25Pa ESP, These values may change with different ESP.
(3) With Standard forward curved fan motors; Machine weight includes a refrigerant charge /Operating weight includes calculated water volume.
(4) Backward curved EC fan options quote electrical power. All other options quote shaft power.
(5) For refrigerant charges, refer to ***Unit Refrigerant Charge (kg/Circuit)***.
(6) Based on air temperature of 15.5°C leaving the evaporator coil.
(7) Based upon low pressure hot water 82°C inlet / 71°C outlet. Air on 20°C. Refer to ***Low Pressure Hot Water (Optional Extra) - X & WX Models***.

Electrical

(1) Values given for full function units (incl. electric heating, humidification and matched condenser) at 7°C evaporating and 54.4°C condensing with standard forward curved fan motors, for optional data, please contact Airedale.
(2) Values given for Cooling only units (incl. Compressor, evaporator fan and matched condenser) at 7°C evaporating and 54.4°C condensing, for optional data, please contact Airedale.
(3) Electrical input power relates to the maximum absorbed electrical power. Actual operating fan power input is shown in the mechanical data tables.

Technical Data Upflow Units WX Type V50WX2 - V60WX2

Mechanical Data

			V50WX2-EZRE-1	V55WX2-EZRE-1	V60WX2-EZRE-1
Capacity	(1)				
Nominal Cooling		kW	53.6	61.6	69.7
Total Heat of Rejection		kW	71.6	82.8	93.6
Capacity Steps			2	2	2
Dimensions - W x D x H		mm	1940 x 750 x 2170	2170 x 750 x 1940	2170 x 750 x 1940
Weight	(3)	kg	709 / 719	729 / 739	733 / 743
Construction			Panels: Galvanised Sheet Steel, Epoxy Baked Powder Paint - Black, (RAL7021)		
Material/Colour			Frame: Aluminium Frame With Aluminium Corners		
Evaporator			Rifled Copper Tube / Turbulated Hydrophilic Coated Aluminium Fins		
Cooling/Dehum Stages			2/1	2/1	2/1
Condenser			Stainless Steel Brazed Plate		
Water Volume		l	9.9	9.9	9.9
Evaporator Fan					
Motor - AC Motor			Centrifugal Forward Curved AC - Designed To 25Pa ESP		
Fan Transmission Type			Belt & Pulley		
Quantity			2	2	2
Motor Shaft Power	(4)	kW	3.0	3.0	3.0
Speed @ 25Pa / Maximum ESP		rpm	1243 / 1447	1243 / 1447	1278 / 1324
Maximum ESP		Pa	255	255	35
Nominal Airflow		m^3/s	4.20	4.20	4.60
Compressor - Scroll			Tandem		
Quantity			2	2	2
Oil Charge Volume (Total)		l	6.60	6.60	6.60
Oil Type			Polyol Ester		
Refrigeration	(5)		Single Circuit		
Refrigeration Control & Type			Thermostatic Expansion Valve (Optional EEV) / R410A		
Charge (Total)		kg	8.9	9.7	9.8
Connections					
Water Inlet / Outlet		mm	42	42	42
Condensate Drain Hose		mm	19	19	19
Filtration			Disposable To ISO16890- ISO-C-75 - 75mm		
Quantity			5	5	5
OPTIONAL EXTRAS					
Electric Heating (Total)		kW	30.0	30.0	30.0
Humidifier					
Capacity		kg/hr	3.0 - 15.0	3.0 - 15.0	3.0 - 15.0
Feed/Drain			3/4" BSPF Braided Flexible Hose / 19mm Hose Connection		
Condensate Pump					
Head		m	5	5	5
Flow		l/m	10.8	10.8	10.8
Drain			10mm Stainless Steel Stub Connection		
Evaporator Fan Options:					
Larger Fan Motor - AC Motor			Centrifugal Forward Curved AC - Designed To 25Pa ESP		
Fan Transmission Type			Belt & Pulley		
Quantity			2	2	2
Motor Shaft Power	(4)	kW	4.0	4.0	4.0
Speed @ Maximum ESP		rpm	1495	1495	1499
Maximum ESP		Pa	305	305	230
Optional Fan - EC Motor			Centrifugal Backward Curved EC - Designed To 25Pa ESP		
Fan Transmission Type			Direct Drive		
Quantity			2	2	2
Motor Shaft Power	(4)	kW	N/A	N/A	N/A
Speed @ 25Pa / Maximum ESP		rpm	1370 / 1510	1370 / 1510	1510 / 1510
Maximum ESP		Pa	165	165	25
Low Pressure Hot Water	(7)		Copper Tube / Aluminium Fin		
Capacity Gross		kW	37.7	37.7	39.2
Water Flow (Nominal)		l/s	0.84	0.84	0.87
LPHW Connection Sizes		mm	22	22	22
Threaded Connection					
Brass Male Taper		in	1 1/2	1 1/2	1 1/2

Technical Data Upflow Units WX Type V50WX2 - V60XW2

Electrical Data

		V50WX2-EZRE-1	V55WX2-EZRE-1	V60WX2-EZRE-1
Unit Data Full Function - WX				
Nominal Run Amps	A	84.6	99.2	108.8
Maximum Start Amps	A	195.8	256.1	260.9
Recommended Mains Fuse Size	A	100	125	125
Unit Data Cooling Only - WX				
Nominal Run Amps	A	39.1	53.7	63.2
Maximum Start Amps	A	150.2	210.5	215.3
Recommended Mains Fuse Size	A	50	63	80
Max Mains Incoming Cable Size	mm²	35	50	50
Mains Supply	V		380V / 3PH + N / 60HZ	
Control Circuit	VAC	24	24	24
Evaporator Fan - Motor Per Fan				
Electrical Input Power	kW	3.5	3.5	3.5
Full Load Amps	A	6.43	6.43	6.43
Locked Rotor Amps	A	45.01	45.01	45.01
Compressor - Per Compressor				
Quantity x Motor Size	kW	2 x 10.79	2 x 12.36	2 x 13.98
Nominal Run Amps	A	12.9	20.15	24.93
Locked Rotor Amps	A	124	177	177
Type of Start			Direct On Line	
Standard Condenser Match - AC Motor - Per Fan				
Electrical Input Power	kW	0.64	0.64	0.64
Full Load Amps	A	3.02	3.02	3.02
OPTIONAL EXTRAS				
Electric Heating				
Stage of Reheat		3	3	3
Number of Elements		12	12	12
Rating	kW	30	30	30
Curent per Phase	A	45.58	45.58	45.58
Humidifier				
Capacity	kg/hr	15	15	15
Rating	kW	11.25	11.25	11.25
Full Load Amps	A	17.09	17.09	17.09
Evaporator Fan Options Larger Fan Motor - AC Motor - Per Fan				
Electrical Input Power	kW	4.6	4.6	4.6
Full Load Amps	A	8.12	8.12	8.12
Locked Rotor Amps	A	60.9	60.9	60.9
Standard Size Motor - EC Motor - Per Fan				
Electrical Input Power	kW	3.1	3.1	3.1
Full Load Amps	A	4.8	4.8	4.8
Condenser Fan Options Standard Condenser Motor - EC Motor - Per Fan				
Electrical Input Power	kW	0.73	0.73	0.73
Full Load Amps	A	3.3	3.3	3.3

Mechanical

(1) Entering air 24°C/45% RH condenser water in / out: 30°C/35°C.
(2) Fan Gain / Fan power input based upon fan operating with design airflow at 25Pa ESP, These values may change with different ESP.
(3) With Standard forward curved fan motors; Machine weight includes a refrigerant charge /Operating weight includes calculated water volume.
(4) Backward curved EC fan options quote electrical power. All other options quote shaft power.
(5) For refrigerant charges, refer to ***Unit Refrigerant Charge (kg/Circuit)***.
(6) Based on air temperature of 15.5°C leaving the evaporator coil.
(7) Based upon low pressure hot water 82°C inlet / 71°C outlet. Air on 20°C. Refer to ***Low Pressure Hot Water (Optional Extra) - X & WX Models***.

Electrical

(1) Values given for full function units (incl. electric heating, humidification and matched condenser) at 7°C evaporating and 54.4°C condensing with standard forward curved fan motors, for optional data, please contact Airedale.
(2) Values given for Cooling only units (incl. Compressor, evaporator fan and matched condenser) at 7°C evaporating and 54.4°C condensing, for optional data, please contact Airedale.
(3) Electrical input power relates to the maximum absorbed electrical power. Actual operating fan power input is shown in the mechanical data tables.

Technical Data Downflow Units X Type - 2

Performance Data

Cooling Capacity (1)		Ambient							
	Air On	25°C		30°C		35°C		40°C	
	(DB°C/%RH)	TC (kW)	SC (kW)	TC (kW)	SC (kW)	TC (kW)	SC (kW)	TC (kW)	SC (kW)
DF8X-EZRE-2 / CR16M	22/50	9.3	8.8	9.3	8.8	9.3	8.8	8.9	8.5
	24/45	9.6	9.3	9.6	9.3	9.6	9.3	9.2	9.0
	26/40	9.9	9.9	9.9	9.9	9.9	9.9	9.5	9.5
DF10X-EZRE-2 / CR16M	22/50	10.3	10.3	10.3	10.3	10.2	10.2	9.7	9.7
	24/45	10.6	10.6	10.6	10.6	10.5	10.5	10.0	10.0
	26/40	11.0	11.0	11.0	11.0	10.8	10.8	10.3	10.3
DF13X-EZRE-2 / CR22M	22/50	13.4	12.2	13.4	12.2	13.3	12.2	12.6	11.8
	24/45	13.8	13.2	13.8	13.2	13.7	13.1	13.0	12.7
	26/40	14.2	14.0	14.2	14.0	14.1	13.9	13.5	13.5
DF15X-EZRE-2 / CR22M	22/50	16.1	14.9	16.1	14.9	15.8	14.7	15.0	14.2
	24/45	16.7	15.8	16.7	15.8	16.3	15.5	15.5	15.0
	26/40	17.1	16.9	17.1	16.9	16.7	16.6	16.0	16.0
DF17X-EZRE-2 / CR30M	22/50	19.4	17.0	19.4	17.0	19.1	16.8	18.1	16.3
	24/45	19.9	18.1	19.9	18.1	19.6	17.9	18.6	17.4
	26/40	20.4	19.5	20.4	19.5	20.0	19.3	19.1	18.7
DF20X2-EZRE-2 / CR30M	22/50	24.1	21.5	24.1	21.5	23.2	21.0	22.0	20.3
	24/45	24.8	23.2	24.8	23.2	23.8	22.6	22.6	21.8
	26/40	25.5	24.7	25.5	24.7	24.5	24.0	23.3	23.2
DF22X2-EZRE-2 / CR50M	22/50	24.8	23.2	24.8	23.2	24.8	23.2	23.8	22.6
	24/45	25.6	24.8	25.6	24.8	25.6	24.8	24.5	24.1
	26/40	26.4	26.4	26.4	26.4	26.4	26.4	25.3	25.3
DF28X-EZRE-2 / CR50M	22/50	26.2	26.2	26.2	26.2	26.2	26.2	25.0	25.0
	24/45	27.2	27.2	27.2	27.2	27.2	27.2	26.0	26.0
	26/40	28.2	28.2	28.2	28.2	28.2	28.2	27.0	27.0

Technical Data Upflow Units X Type - 2

Performance Data

Cooling Capacity (1)		Ambient							
	Air On	25°C		30°C		35°C		40°C	
	(DB°C/%RH)	TC (kW)	SC (kW)	TC (kW)	SC (kW)	TC (kW)	SC (kW)	TC (kW)	SC (kW)
DF31X-EZRE-2 / CR50M	22/50	30.3	30.3	30.3	30.3	30.1	30.1	28.7	28.7
	24/45	31.5	31.5	31.5	31.5	31.2	31.2	29.8	29.8
	26/40	32.7	32.7	32.7	32.7	32.3	32.3	31.0	31.0
DF35X-EZRE-2 / CR50M	22/50	35.4	35.4	35.4	35.4	34.7	34.7	33.0	33.0
	24/45	36.7	36.7	36.7	36.7	35.9	35.9	34.2	34.2
	26/40	38.1	38.1	38.1	38.1	37.2	37.2	35.6	35.6
DF40X-EZRE-2 / CR65M	22/50	40.0	40.0	40.0	40.0	39.7	39.7	37.8	37.8
	24/45	41.5	41.5	41.5	41.5	41.1	41.1	39.2	39.2
	26/40	43.0	43.0	43.0	43.0	42.5	42.5	40.7	40.7
DF45X-EZRE-2 / CR80M	22/50	44.8	43.7	44.8	43.7	44.8	43.7	42.6	42.3
	24/45	46.3	46.3	46.3	46.3	46.3	46.3	44.1	44.1
	26/40	47.9	47.9	47.9	47.9	47.8	47.8	45.6	45.6
DF50X2-EZRE-2 / CR80M	22/50	50.9	49.4	50.9	49.4	50.5	49.1	47.9	47.5
	24/45	52.7	52.7	52.7	52.7	52.2	52.2	49.6	49.6
	26/40	54.5	54.5	54.5	54.5	53.9	53.9	51.3	51.3
DF55X2-EZRE-2 / CR80M	22/50	58.6	53.9	58.6	53.9	57.5	53.2	54.6	51.5
	24/45	60.6	58.0	60.6	58.0	59.2	57.1	56.4	55.4
	26/40	62.4	62.2	62.4	62.2	60.9	60.9	58.0	58.0
DF60X2-EZRE-2 / CR80M	22/50	66.5	60.2	66.5	60.2	64.2	58.9	60.8	57.0
	24/45	68.6	64.6	68.6	64.6	66.1	63.1	62.7	61.0
	26/40	70.6	69.2	70.6	69.2	67.9	67.5	64.5	64.5

Technical Data Downflow Units X Type - 2

Performance Data Larger Condenser

Cooling Capacity (1)		Ambient									
	Air On	25°C		30°C		35°C		40°C		46°C	
	(DB°C/%RH)	TC (kW)	SC (kW)	TC (kW)	SC (kW)	TC (kW)	SC (kW)	TC (kW)	SC (kW)	TC (kW)	SC (kW)
DF8X-EZRE-2 / CR22M	22/50	9.3	8.8	9.3	8.8	9.3	8.8	9.0	8.6	8.6	8.3
	24/45	9.6	9.3	9.6	9.3	9.6	9.3	9.3	9.1	8.9	8.9
	26/40	9.9	9.9	9.9	9.9	9.9	9.9	9.6	9.6	9.2	9.2
DF10X-EZRE-2 / CR22M	22/50	10.3	10.3	10.3	10.3	10.3	10.3	9.9	9.9	9.3	9.3
	24/45	10.6	10.6	10.6	10.6	10.6	10.6	10.2	10.2	9.7	9.7
	26/40	11.0	11.0	11.0	11.0	11.0	11.0	10.5	10.5	10.0	10.0
DF13X-EZRE-2 / CR30M	22/50	13.4	12.2	13.4	12.2	13.4	12.2	12.9	11.9	12.2	11.5
	24/45	13.8	13.2	13.8	13.2	13.8	13.2	13.3	12.9	12.7	12.5
	26/40	14.2	14.0	14.2	14.0	14.2	14.0	13.7	13.6	13.1	13.1
DF15X-EZRE-2 / CR30M	22/50	16.1	14.9	16.1	14.9	16.1	14.9	15.3	14.4	14.5	13.9
	24/45	16.7	15.8	16.7	15.8	16.6	15.7	15.8	15.3	15.0	14.7
	26/40	17.1	16.9	17.1	16.9	17.1	16.9	16.3	16.3	15.5	15.5
DF17X-EZRE-2 / CR50M	22/50	19.4	17.0	19.4	17.0	19.4	17.0	18.8	16.7	18.0	16.3
	24/45	19.9	18.1	19.9	18.1	19.9	18.1	19.3	17.8	18.5	17.3
	26/40	20.4	19.5	20.4	19.5	20.4	19.5	19.8	19.1	19.0	18.6
DF20X2-EZRE-2 / CR50M	22/50	24.1	21.5	24.1	21.5	24.1	21.5	23.2	21.0	22.0	20.3
	24/45	24.8	23.2	24.8	23.2	24.8	23.2	23.8	22.6	22.7	21.9
	26/40	25.5	24.7	25.5	24.7	25.5	24.7	24.5	24.0	23.3	23.2
DF22X2-EZRE-2 / CR65M	22/50	24.8	23.2	24.8	23.2	24.8	23.2	24.1	22.8	23.1	22.1
	24/45	25.6	24.8	25.6	24.8	25.6	24.8	24.9	24.4	23.8	23.6
	26/40	26.4	26.4	26.4	26.4	26.4	26.4	25.7	25.7	24.6	24.6
DF28X-EZRE-2 / CR65M	22/50	26.2	26.2	26.2	26.2	26.2	26.2	25.4	25.4	24.3	24.3
	24/45	27.2	27.2	27.2	27.2	27.2	27.2	26.4	26.4	25.3	25.3
	26/40	28.2	28.2	28.2	28.2	28.2	28.2	27.4	27.4	26.3	26.3
DF31X-EZRE-2 / CR65M	22/50	30.3	30.3	30.3	30.3	30.3	30.3	29.3	29.3	27.9	27.9
	24/45	31.5	31.5	31.5	31.5	31.5	31.5	30.4	30.4	29.0	29.0
	26/40	32.7	32.7	32.7	32.7	32.7	32.7	31.5	31.5	30.2	30.2

Technical Data Upflow Units X Type - 2

Performance Data Larger Condenser

Cooling Capacity (1)		Ambient									
	Air On	25°C		30°C		35°C		40°C		46°C	
	(DB°C/%RH)	TC (kW)	SC (kW)	TC (kW)	SC (kW)	TC (kW)	SC (kW)	TC (kW)	SC (kW)	TC (kW)	SC (kW)
DF35X-EZRE-2 / CR65M	22/50	35.4	35.4	35.4	35.4	35.4	35.4	33.8	33.8	32.1	32.1
	24/45	36.7	36.7	36.7	36.7	36.7	36.7	35.1	35.1	33.4	33.4
	26/40	38.1	38.1	38.1	38.1	38.1	38.1	36.4	36.4	34.8	34.8
DF40X-EZRE-2 / CR80M	22/50	40.0	40.0	40.0	40.0	40.0	40.0	38.4	38.4	36.6	36.6
	24/45	41.5	41.5	41.5	41.5	41.5	41.5	39.9	39.9	38.0	38.0
	26/40	43.0	43.0	43.0	43.0	43.0	43.0	41.3	41.3	39.6	39.6
DF45X-EZRE-2 / CR105M	22/50	44.8	43.7	44.8	43.7	44.8	43.7	43.2	42.7	41.1	41.1
	24/45	46.3	46.3	46.3	46.3	46.3	46.3	44.7	44.7	42.6	42.6
	26/40	47.9	47.9	47.9	47.9	47.9	47.9	46.2	46.2	44.1	44.1
DF50X2-EZRE-2 / CR105M	22/50	50.9	49.4	50.9	49.4	50.9	49.4	48.7	48.0	46.2	46.2
	24/45	52.7	52.7	52.7	52.7	52.7	52.7	50.5	50.5	47.9	47.9
	26/40	54.5	54.5	54.5	54.5	54.5	54.5	52.2	52.2	49.6	49.6
DF55X2-EZRE-2 / CR105M	22/50	58.6	53.9	58.6	53.9	58.5	53.8	55.7	52.2	52.7	50.3
	24/45	60.6	58.0	60.6	58.0	60.3	57.8	57.5	56.1	54.4	54.1
	26/40	62.4	62.2	62.4	62.2	62.0	61.9	59.2	59.2	56.0	56.0
DF60X2-EZRE-2 / CR105M	22/50	66.5	60.2	66.5	60.2	65.6	59.7	62.3	57.8	58.5	55.5
	24/45	68.6	64.6	68.6	64.6	67.6	64.0	64.2	62.0	60.3	59.5
	26/40	70.6	69.2	70.6	69.2	69.4	68.5	66.1	66.1	62.1	62.1

Technical Data Downflow Units X Type -2

Noise Data

	Sound Measurement		Overall dB(A)	Frequency (Hz) dB 63	125	250	500	1000	2000	4000	8000
DF8X	Discharge Air	Power	77	70	74	73	72	72	71	64	59
	Return Air	Power	68	73	74	72	65	59	56	54	44
	Case Breakout	Power	63	70	71	63	60	56	53	50	43
	Sound @ 3m	Pressure	48	55	57	49	45	42	38	36	29
DF10X	Discharge Air	Power	80	73	77	76	75	75	74	67	62
	Return Air	Power	71	76	77	75	68	62	59	57	47
	Case Breakout	Power	66	73	74	66	63	59	55	53	47
	Sound @ 3m	Pressure	51	58	60	52	48	45	41	38	32
DF13X	Discharge Air	Power	77	71	74	72	72	72	71	64	59
	Return Air	Power	67	73	74	72	65	59	56	54	44
	Case Breakout	Power	63	70	71	63	60	56	52	50	44
	Sound @ 3m	Pressure	48	56	57	49	45	42	38	36	30
DF15X	Discharge Air	Power	73	70	75	72	69	68	67	62	57
	Return Air	Power	66	73	74	71	62	55	52	53	42
	Case Breakout	Power	62	70	72	63	57	54	49	51	44
	Sound @ 3m	Pressure	47	55	57	49	43	39	34	36	29
DF17X	Discharge Air	Power	77	74	78	76	73	72	70	66	61
	Return Air	Power	70	77	78	75	66	59	55	56	46
	Case Breakout	Power	65	73	76	67	61	57	52	53	46
	Sound @ 3m	Pressure	50	59	61	52	46	43	38	39	31
DF20X2	Discharge Air	Power	81	74	78	77	76	77	75	68	63
	Return Air	Power	72	77	78	76	69	63	60	59	48
	Case Breakout	Power	67	74	76	68	64	61	56	54	48
	Sound @ 3m	Pressure	52	59	61	53	49	46	42	40	34
DF22X2	Discharge Air	Power	85	79	83	81	80	81	79	72	67
	Return Air	Power	76	81	82	80	73	67	64	63	52
	Case Breakout	Power	71	78	80	72	68	65	60	58	52
	Sound @ 3m	Pressure	56	64	65	57	54	50	46	43	37
DF28X	Discharge Air	Power	87	77	80	79	81	81	82	79	76
	Return Air	Power	68	77	71	63	66	63	58	56	47
	Case Breakout	Power	70	80	70	63	67	67	60	57	48
	Sound @ 3m	Pressure	55	65	56	49	53	52	45	42	34

(1) dB(A) is the overall sound level, measured on the A scale
(2) All sound data measured at nominal conditions, Discharge Air, Return air and case breakout is sound power.

Technical Data Downflow Units WX Type -2

Noise Data

	Sound Measurement		Overall dB(A)	Frequency (Hz) dB 63	125	250	500	1000	2000	4000	8000
DF31X	Discharge Air	Power	91	78	84	83	85	84	85	83	80
	Return Air	Power	71	77	75	66	69	66	61	60	52
	Case Breakout	Power	73	80	74	67	70	69	63	60	52
	Sound @ 3m	Pressure	58	66	59	52	55	55	48	46	38
DF35X	Discharge Air	Power	90	77	83	82	87	83	84	82	79
	Return Air	Power	71	76	74	65	71	65	60	59	51
	Case Breakout	Power	72	78	73	66	71	68	61	60	51
	Sound @ 3m	Pressure	58	65	58	51	57	53	47	45	37
DF40X	Discharge Air	Power	92	80	86	85	89	86	86	85	81
	Return Air	Power	73	78	76	67	73	67	62	62	53
	Case Breakout	Power	75	80	75	68	74	70	64	62	54
	Sound @ 3m	Pressure	60	65	61	54	59	56	49	48	40
DF45X	Discharge Air	Power	92	80	86	85	89	86	86	85	81
	Return Air	Power	73	78	76	67	73	67	62	62	54
	Case Breakout	Power	75	80	75	68	74	70	64	62	54
	Sound @ 3m	Pressure	60	65	61	54	59	56	49	48	40
DF50X2	Discharge Air	Power	89	78	84	86	82	83	84	81	76
	Return Air	Power	69	76	75	69	66	64	59	58	48
	Case Breakout	Power	71	79	74	69	67	68	61	58	49
	Sound @ 3m	Pressure	56	64	59	55	52	53	47	43	34
DF55X2	Discharge Air	Power	89	78	84	86	82	83	84	81	76
	Return Air	Power	70	77	75	69	67	64	60	58	48
	Case Breakout	Power	71	79	74	69	68	68	62	58	49
	Sound @ 3m	Pressure	57	64	59	55	53	53	47	44	35
DF60X2	Discharge Air	Power	91	80	85	89	84	85	86	83	79
	Return Air	Power	71	79	76	72	69	66	62	60	51
	Case Breakout	Power	73	81	75	73	69	69	63	60	52
	Sound @ 3m	Pressure	58	66	60	58	55	54	49	46	37

(1) dB(A) is the overall sound level, measured on the A scale
(2) All sound data measured at nominal conditions, Discharge Air, Return air and case breakout is sound power.

Technical Data Downflow Units X Type DF8X - DF10X

Mechanical Data

			DF8X-EZRE-2	DF10X-EZRE-2
Standard Condenser Match			CR16	CR16
Capacity				
Nominal Cooling	(1)	kW	9.6	10.5
Capacity Steps			1	1
Dimensions - W x D x H		mm	670 x 670 x 1940	670 x 670 x 1940
Weight	(3)	kg	195	199
Construction			Panels: Galvanised Sheet Steel, Epoxy Baked	
Material/Colour			Powder Paint - Black, (RAL7021)	
			Frame: Aluminium Frame With Aluminium Corners	
Evaporator			Rifled Copper Tube / Turbulated Hydrophilic Coated Aluminium Fins	
Cooling/Dehum Stages			1/1	1/1
Evaporator Fan				
Motor - AC Motor			Centrifugal Forward Curved AC - Designed To 25Pa ESP	
Fan Transmission Type			Direct Drive	
Quantity			1	1
Motor Shaft Power	(4)	kW	N/A	N/A
Maximum ESP		Pa	140	118
Nominal Airflow		m³/s	0.75	0.95
Compressor - Scroll			Single	
Quantity			1	1
Oil Charge Volume (Total)		l	0.70	1.20
Oil Type			Polyol Ester	
Refrigeration	(5)		Single Circuit	
Refrigeration Control & Type			Thermostatic Expansion Valve (Optional EEV) / R410A	
Holding Charge			Inert Gas	
Connections				
Liquid (Sweat)		in	3/8	3/8
Discharge (Sweat)		in	1/2	1/2
Filtration			Disposable To ISO16890- ISO-C-75 - 50mm	
Quantity			1	1
OPTIONAL EXTRAS				
Larger Condenser Match			CR22	CR22
Nominal Cooling		kW	7.9	10.2
Hot Gas Reheat	(6)			
Nom Heating (Gross)		kW	4.8	5.3
Electric Heating (Total)		kW	7.5	7.5
Humidifier				
Capacity		kg/hr	0.6 - 3.0	0.6 - 3.0
Feed/Drain			3/4” BSPF Braided Flexible Hose / 19 mm Hose Connection	
Condensate Pump				
Head		m	8	8
Flow		l/m	5	5
Drain			10mm Stainless Steel Stub Connection	
Optional Fan - EC Motor			Centrifugal Backward Curved DD EC - Designed to 25Pa ESP	
Fan Transmission Type			Direct Drive	N/A
Quantity			1	N/A
Motor Shaft Power	(4)	kW	2.6	N/A
Speed @ 25Pa / Maximum ESP		rpm		N/A
Maximum ESP		Pa		N/A
Optional Fan - EC Motor			Centrifugal Backward Curved DD EC - Designed to 25Pa ESP	
Fan Transmission Type			Direct Drive	
Quantity			1	1
Motor Shaft Power	(4)	kW	N/A	N/A
Speed @ 25Pa / Maximum ESP		rpm	1705 / 2215	2145 / 2215
Maximum ESP		Pa	295	50
Low Pressure Hot Water	(7)		Copper Tube / Aluminium Fin	
Capacity Gross		kW	7.5	8.4
Water Flow (Nominal)		l/s	0.17	0.19
LPHW Connection Sizes		mm	22	22

Technical Data Downflow Units X Type DF8X - DF10X

Electrical Data

Standard Condenser Match - X		DF8X-EZRE-2 CR16	DF10X-EZRE-2 CR16
Unit Data Full Function - X			
Nominal Run Amps	A	40.9	43.3
Maximum Start Amps	A	124.9	126.0
Recommended Mains Fuse Size	A	50	50
Unit Data Cooling Only - X			
Nominal Run Amps	A	21.2	23.6
Maximum Start Amps	A	105.2	106.3
Recommended Mains Fuse Size	A	25	32
Max Mains Incoming Cable Size	mm²	35	35
Mains Supply	V	220V / 3PH / 60HZ	
Control Circuit	VAC	24	24
Evaporator Fan - Motor Per Fan			
Electrical Input Power	kW	1.6	2.2
Full Load Amps	A	8.5	9.6
Locked Rotor Amps	A	21.2	24
Compressor - Per Compressor			
Quantity x Motor Size	kW	1 x 3.95	1 x 4.43
Nominal Run Amps	A	11.0	12.3
Locked Rotor Amps	A	95	95
Type of Start		Direct On Line	
Standard Condenser Match - AC Motor - Per Fan			
Electrical Input Power	kW	0.39	0.39
Full Load Amps	A	1.72	1.72
OPTIONAL EXTRAS			
Electric Heating			
Stage of Reheat		1	1
Number of Elements		3	3
Rating	kW	7.5	7.5
Curent per Phase	A	19.68	19.68
Humidifier			
Capacity	kg/hr	3	3
Rating	kW	2.25	2.25
Full Load Amps	A	5.90	5.90
Evaporator Fan Options Larger Fan Motor - AC Motor - Per Fan			
Electrical Input Power	kW	2.2	N/A
Full Load Amps	A	9.1	N/A
Locked Rotor Amps	A	22.75	N/A
Standard Size Motor - EC Motor - Per Fan			
Electrical Input Power	kW	0.94	0.94
Full Load Amps	A	3	3
Condenser Fan Options Standard Condenser Motor - EC Motor - Per Fan			
Electrical Input Power	kW	0.7	0.7
Full Load Amps	A	3.1	3.1

Mechanical

(1) Entering air 24°C/45% RH ambient 35°C.
(2) Fan Gain / Fan power input based upon fan operating with design airflow at 25Pa ESP, These values may change with different ESP.
(3) With Standard forward curved fan motors; Machine weight includes a refrigerant charge.
(4) Backward curved EC fan options quote electrical power. All other options quote shaft power.
(5) For refrigerant charges, refer to ***Unit Refrigerant Charge (kg/Circuit)***.
(6) Based on air temperature of 15.5°C leaving the evaporator coil.
(7) Based upon low pressure hot water 82°C inlet / 71°C outlet. Air on 20°C. Refer to ***Low Pressure Hot Water***.

Electrical

(1) Values given for full function units (incl. electric heating, humidification and matched condenser) at 7°C evaporating and 54.4°C condensing with standard forward curved fan motors, for optional data, please contact Airedale.
(2) Values given for Cooling only units (incl. Compressor, evaporator fan and matched condenser) at 7°C evaporating and 54.4°C condensing, for optional data, please contact Airedale.
(3) Electrical input power relates to the maximum absorbed electrical power. Actual operating fan power input is shown in the mechanical data tables.

Technical Data Downflow Units X Type DF13X - DF17X

Mechanical Data

			DF13X-EZRE-2	DF15X-EZRE-2	DF17X-EZRE-2
Standard Condenser Match			CR22	CR22	CR30
Capacity					
Nominal Cooling	(1)	kW	13.7	16.3	19.6
Capacity Steps			1	1	1
Dimensions - W x D x H		mm	990 x 670 x 1940	990 x 670 x 1940	990 x 670 x 1940
Weight	(3)	kg	217	241	242
Construction			Panels: Galvanised Sheet Steel, Epoxy Baked		
Material/Colour			Powder Paint - Black, (RAL7021)		
			Frame: Aluminium Frame With Aluminium Corners		
Evaporator			Rifled Copper Tube / Turbulated Hydrophilic Coated Aluminium Fins		
Cooling/Dehum Stages			1/1	1/1	1/1
Evaporator Fan					
Motor - AC Motor			Centrifugal Forward Curved AC - Designed To 25Pa ESP		
Fan Transmission Type			Direct Drive		
Quantity			1	1	1
Motor Shaft Power	(4)	kW	N/A	N/A	N/A
Maximum ESP		Pa	294	120	34
Nominal Airflow		m³/s	1.00	1.20	1.40
Compressor - Scroll			Single		
Quantity			1	1	1
Oil Charge Volume (Total)		l	1.2	1.66	1.89
Oil Type			Polyol Ester		
Refrigeration	(5)		Single Circuit		
Refrigeration Control & Type			Thermostatic Expansion Valve (Optional EEV) / R410A		
Holding Charge			Inert Gas		
Connections					
Liquid (Sweat)		in	3/8	3/8	3/8
Discharge (Sweat)		in	5/8	5/8	5/8
Filtration			Disposable To ISO16890- ISO-C-75 - 50mm		
Quantity			2	2	2
OPTIONAL EXTRAS					
Larger Condenser Match			CR30	CR30	CR50
Nominal Cooling		kW	13.4	15.2	17.4
Hot Gas Reheat	(6)				
Nom Heating (Gross)		kW	7.4	8.1	8.6
Electric Heating (Total)		kW	7.5	7.5	7.5
Humidifier					
Capacity		kg/hr	0.6 - 3.0	0.6 - 3.0	0.6 - 3.0
Feed/Drain			3/4" BSPF Braided Flexible Hose / 19 mm Hose Connection		
Condensate Pump					
Head		m	8	8	8
Flow		l/m	5	5	5
Drain			10mm Stainless Steel Stub Connection		
Optional Fan - EC Motor			Centrifugal Backward Curved DD EC - Designed to 25Pa ESP		
Fan Transmission Type			Direct Drive		
Quantity			1	1	1
Motor Shaft Power	(4)	kW	N/A	N/A	N/A
Speed @ 25Pa / Maximum ESP		rpm	1105 / 1560	1310 / 1560	1515 / 1560
Maximum ESP		Pa	310	195	45
Low Pressure Hot Water	(7)		Copper Tube / Aluminium Fin		
Capacity Gross		kW	11.5	12.5	13.3
Water Flow (Nominal)		l/s	0.26	0.28	0.30
LPHW Connection Sizes		mm	22	22	22

Technical Data Downflow Units X Type DF13X - DF17X

Electrical Data

Standard Condenser Match - X		DF13X-EZRE-2 CR22	DF15X-EZRE-2 CR22	DF17X-EZRE-2 CR30
Unit Data Full Function - X				
Nominal Run Amps	A	47.9	48.8	52.4
Maximum Start Amps	A	152.3	153.5	190.5
Recommended Mains Fuse Size	A	63	63	63
Unit Data Cooling Only - X				
Nominal Run Amps	A	28.2	29.1	32.8
Maximum Start Amps	A	132.6	133.8	170.8
Recommended Mains Fuse Size	A	40	40	40
Max Mains Incoming Cable Size	mm²	35	35	35
Mains Supply	V		220V / 3PH / 60HZ	
Control Circuit	VAC	24	24	24
Evaporator Fan - Motor Per Fan				
Electrical Input Power	kW	2.2	1.9	1.9
Full Load Amps	A	9.6	7.8	7.8
Locked Rotor Amps	A	24	19.5	19.5
Compressor - Per Compressor				
Quantity x Motor Size	kW	1 x 5,53	1 x 6.57	1 x 7.82
Nominal Run Amps	A	15.6	18.3	21.9
Locked Rotor Amps	A	120	123	160
Type of Start			Direct On Line	
Standard Condenser Match - AC Motor - Per Fan				
Electrical Input Power	kW	0.64	0.64	0.64
Full Load Amps	A	3.02	3.02	3.02
OPTIONAL EXTRAS				
Electric Heating				
Stage of Reheat		1	1	1
Number of Elements		3	3	3
Rating	kW	7.5	7.5	7.5
Curent per Phase	A	19.68	19.68	19.68
Humidifier				
Capacity	kg/hr	3	3	3
Rating	kW	2.25	2.25	2.25
Full Load Amps	A	5.90	5.90	5.90
Evaporator Fan Options Larger Fan Motor - AC Motor - Per Fan				
Electrical Input Power	kW	N/A	N/A	N/A
Full Load Amps	A	N/A	N/A	N/A
Locked Rotor Amps	A	N/A	N/A	N/A
Standard Size Motor - EC Motor - Per Fan				
Electrical Input Power	kW	1.01	1.01	1.01
Full Load Amps	A	3.2	3.2	3.2
Condenser Fan Options Standard Condenser Motor - EC Motor - Per Fan				
Electrical Input Power	kW	0.73	0.73	0.73
Full Load Amps	A	3.3	3.3	3.3

Mechanical

(1) Entering air 24°C/45% RH ambient 35°C.
(2) Fan Gain / Fan power input based upon fan operating with design airflow at 25Pa ESP, These values may change with different ESP.
(3) With Standard forward curved fan motors; Machine weight includes a refrigerant charge.
(4) Backward curved EC fan options quote electrical power. All other options quote shaft power.
(5) For refrigerant charges, refer to ***Unit Refrigerant Charge (kg/Circuit)***.
(6) Based on air temperature of 15.5°C leaving the evaporator coil.
(7) Based upon low pressure hot water 82°C inlet / 71°C outlet. Air on 20°C. Refer to ***Low Pressure Hot Water***.

Electrical

(1) Values given for full function units (incl. electric heating, humidification and matched condenser) at 7°C evaporating and 54.4°C condensing with standard forward curved fan motors, for optional data, please contact Airedale.
(2) Values given for Cooling only units (incl. Compressor, evaporator fan and matched condenser) at 7°C evaporating and 54.4°C condensing, for optional data, please contact Airedale.
(3) Electrical input power relates to the maximum absorbed electrical power. Actual operating fan power input is shown in the mechanical data tables.

Technical Data Downflow Units X Type DF20X2 - DF22X2

Mechanical Data

			DF20X2-EZRE-2	DF22X2-EZRE-2
Standard Condenser Match			CR30	CR50
Capacity				
Nominal Cooling	(1)	kW	23.8	25.6
Capacity Steps			2	2
Dimensions - W x D x H		mm	1310 x 670 x 1940	1310 x 670 x 1940
Weight	(3)	kg	293	293
Construction			Panels: Galvanised Sheet Steel, Epoxy Baked	
Material/Colour			Powder Paint - Black, (RAL7021)	
			Frame: Aluminium Frame With Aluminium Corners	
Evaporator			Rifled Copper Tube / Turbulated Hydrophilic Coated Aluminium Fins	
Cooling/Dehum Stages			2/1	2/1
Evaporator Fan				
Motor - AC Motor			Centrifugal Forward Curved AC - Designed To 25Pa ESP	
Fan Transmission Type			Direct Drive	
Quantity			2	2
Motor Shaft Power	(4)	kW	N/A	N/A
Maximum ESP		Pa	194	43
Nominal Airflow		m³/s	1.70	2.00
Compressor - Scroll			Tandem	
Quantity			2	2
Oil Charge Volume (Total)		l	2.40	2.40
Oil Type			Polyol Ester	
Refrigeration	(5)		Single Circuit	
Refrigeration Control & Type			Thermostatic Expansion Valve (Optional EEV) / R410A	
Holding Charge			Inert Gas	
Connections				
Liquid (Sweat)		in	1/2	1/2
Discharge (Sweat)		in	7/8	7/8
Filtration			Disposable To ISO16890- ISO-C-75 - 50mm	
Quantity			3	3
OPTIONAL EXTRAS				
Larger Condenser Match			CR50	CR65
Nominal Cooling		kW	20.8	21.5
Hot Gas Reheat	(6)			
Nom Heating (Gross)		kW	9.0	9.6
Electric Heating (Total)		kW	15.0	15.0
Humidifier				
Capacity		kg/hr	0.6 - 3.0	0.6 - 3.0
Feed/Drain			3/4" BSPF Braided Flexible Hose / 19 mm Hose Connection	
Condensate Pump				
Head		m	8	8
Flow		l/m	5	5
Drain			10mm Stainless Steel Stub Connection	
Optional Fan - EC Motor			Centrifugal Backward Curved DD EC - Designed to 25Pa ESP	
Fan Transmission Type			Direct Drive	
Quantity			1	1
Motor Shaft Power	(4)	kW	N/A	N/A
Speed @ 25Pa / Maximum ESP		rpm	1745 / 2165	2055 / 2165
Maximum ESP		Pa	450	145
Low Pressure Hot Water	(7)		Copper Tube / Aluminium Fin	
Capacity Gross		kW	16.1	16.6
Water Flow (Nominal)		l/s	0.36	0.37
LPHW Connection Sizes		mm	22	22

Technical Data Downflow Units X Type DF20X2 - DF22X2

Electrical Data

Standard Condenser Match - X		DF20X2-EZRE-2 CR30	DF22X2-EZRE-2 CR50
Unit Data Full Function - X			
Nominal Run Amps	A	91.5	94.5
Maximum Start Amps	A	196.5	199.5
Recommended Mains Fuse Size	A	100	125
Unit Data Cooling Only - X			
Nominal Run Amps	A	52.1	55.1
Maximum Start Amps	A	157.2	160.2
Recommended Mains Fuse Size	A	63	63
Max Mains Incoming Cable Size	mm²	50	50
Mains Supply	V	220V / 3PH / 60HZ	
Control Circuit	VAC	24	24
Evaporator Fan - Motor Per Fan			
Electrical Input Power	kW	2.2	2.2
Full Load Amps	A	9.6	9.6
Locked Rotor Amps	A	24	24
Compressor - Per Compressor			
Quantity x Motor Size	kW	2 x 5.16	2 x 5.16
Nominal Run Amps	A	14.9	14.9
Locked Rotor Amps	A	120	120
Type of Start		Direct On Line	
Standard Condenser Match - AC Motor - Per Fan			
Electrical Input Power	kW	0.64	0.64
Full Load Amps	A	3.02	3.02
OPTIONAL EXTRAS			
Electric Heating			
Stage of Reheat		2	2
Number of Elements		6	6
Rating	kW	15	15
Curent per Phase	A	39.36	39.36
Humidifier			
Capacity	kg/hr	3	3
Rating	kW	2.25	2.25
Full Load Amps	A	5.90	5.90
Evaporator Fan Options Larger Fan Motor - AC Motor - Per Fan			
Electrical Input Power	kW	N/A	N/A
Full Load Amps	A	N/A	N/A
Locked Rotor Amps	A	N/A	N/A
Standard Size Motor - EC Motor - Per Fan			
Electrical Input Power	kW	2.63	2.63
Full Load Amps	A	9.8	9.8
Condenser Fan Options Standard Condenser Motor - EC Motor - Per Fan			
Electrical Input Power	kW	0.73	0.73
Full Load Amps	A	3.3	3.3

Mechanical

(1) Entering air 24°C/45% RH ambient 35°C.
(2) Fan Gain / Fan power input based upon fan operating with design airflow at 25Pa ESP, These values may change with different ESP.
(3) With Standard forward curved fan motors; Machine weight includes a refrigerant charge.
(4) Backward curved EC fan options quote electrical power. All other options quote shaft power.
(5) For refrigerant charges, refer to ***Unit Refrigerant Charge (kg/Circuit)***.
(6) Based on air temperature of 15.5°C leaving the evaporator coil.
(7) Based upon low pressure hot water 82°C inlet / 71°C outlet. Air on 20°C. Refer to ***Low Pressure Hot Water***.

Electrical

(1) Values given for full function units (incl. electric heating, humidification and matched condenser) at 7°C evaporating and 54.4°C condensing with standard forward curved fan motors, for optional data, please contact Airedale.
(2) Values given for Cooling only units (incl. Compressor, evaporator fan and matched condenser) at 7°C evaporating and 54.4°C condensing, for optional data, please contact Airedale.
(3) Electrical input power relates to the maximum absorbed electrical power. Actual operating fan power input is shown in the mechanical data tables.

Technical Data Downflow Units X Type DF28X - DF31X

Mechanical Data

			DF28X-EZRE-2	DF31X-EZRE-2
Standard Condenser Match			CR50	CR50
Capacity				
Nominal Cooling	(1)	kW	27.2	31.2
Capacity Steps			1	1
Dimensions - W x D x H		mm	1460 x 670 x 1940	1460 x 670 x 1940
Weight	(3)	kg	414	419
Construction			Panels: Galvanised Sheet Steel, Epoxy Baked	
Material/Colour			Powder Paint - Black, (RAL7021)	
			Frame: Aluminium Frame With Aluminium Corners	
Evaporator			Rifled Copper Tube / Turbulated Hydrophilic Coated Aluminium Fins	
Cooling/Dehum Stages			1/1	1/1
Evaporator Fan				
Motor - AC Motor			Centrifugal Forward Curved AC - Designed To 25Pa ESP	
Fan Transmission Type			Belt & Pulley	
Quantity			1	1
Motor Shaft Power	(4)	kW	2.2	4
Maximum ESP		Pa	75	265
Nominal Airflow		m³/s	2.40	2.80
Compressor - Scroll			Single	
Quantity			1	1
Oil Charge Volume (Total)		l	3.30	3.30
Oil Type			Polyol Ester	
Refrigeration	(5)		Single Circuit	
Refrigeration Control & Type			Thermostatic Expansion Valve (Optional EEV) / R410A	
Holding Charge			Inert Gas	
Connections				
Liquid (Sweat)		in	1/2	1/2
Discharge (Sweat)		in	7/8	7/8
Filtration			Disposable To ISO16890- ISO-C-75 - 75mm	
Quantity			3	3
OPTIONAL EXTRAS				
Larger Condenser Match			CR65	CR65
Nominal Cooling		kW	25.5	29.1
Hot Gas Reheat	(6)			
Nom Heating (Gross)		kW	12.7	13.5
Electric Heating (Total)		kW	20.0	20.0
Humidifier				
Capacity		kg/hr	1.6 - 8.0	1.6 - 8.0
Feed/Drain			3/4” BSPF Braided Flexible Hose / 19 mm Hose Connection	
Condensate Pump				
Head		m	5	5
Flow		l/m	10.8	10.8
Drain			10mm Stainless Steel Stub Connection	
Evaporator Fan Options:				
Larger Fan Motor - AC Motor			Centrifugal Backward Curved DD EC - Designed to 25Pa ESP	
Fan Transmission Type			Belt & Pulley	
Quantity			1	N/A
Motor Shaft Power	(4)	kW	3.0 / 4.0	N/A
Speed @ Maximum ESP		rpm	1144 / 1439	N/A
Maximum ESP		Pa	362 / 722	N/A
Optional Fan - EC Motor			Centrifugal Backward Curved EC - Designed To 25Pa ESP	
Fan Transmission Type			Direct Drive	
Quantity			2	2
Motor Shaft Power	(4)	kW	N/A	N/A
Speed @ 25Pa / Maximum ESP		rpm	1570 / 2165	1775 / 2165
Maximum ESP		Pa	595	390
Low Pressure Hot Water	(7)		Copper Tube / Aluminium Fin	
Capacity Gross		kW	21.3	22.7
Water Flow (Nominal)		l/s	0.48	0.51
LPHW Connection Sizes		mm	22	22

Technical Data Downflow Units X Type DF28X - DF31X

Electrical Data

Standard Condenser Match - X		DF28X-EZRE-2 CR50	DF31X-EZRE-2 CR50
Unit Data Full Function - X			
Nominal Run Amps	A	105.4	117.2
Maximum Start Amps	A	277.0	350.0
Recommended Mains Fuse Size	A	125	160
Unit Data Cooling Only - X			
Nominal Run Amps	A	46.4	58.1
Maximum Start Amps	A	217.9	291.0
Recommended Mains Fuse Size	A	63	80
Max Mains Incoming Cable Size	mm²	50	95
Mains Supply	V	220V / 3PH / 60HZ	
Control Circuit	VAC	24	24
Evaporator Fan - Motor Per Fan			
Electrical Input Power	kW	2.6	4.6
Full Load Amps	A	8.37	14.45
Locked Rotor Amps	A	58.59	101.15
Compressor - Per Compressor			
Quantity x Motor Size	kW	1 x 10.79	1 x 12.36
Nominal Run Amps	A	31.48	37.12
Locked Rotor Amps	A	203	270
Type of Start			
Standard Condenser Match - AC Motor - Per Fan			
Electrical Input Power	kW	0.64	0.64
Full Load Amps	A	3.02	3.02
OPTIONAL EXTRAS			
Electric Heating			
Stage of Reheat		3	3
Number of Elements		8	8
Rating	kW	20	20
Curent per Phase	A	59.05	59.05
Humidifier			
Capacity	kg/hr	8	8
Rating	kW	6.00	6.00
Full Load Amps	A	15.75	15.75
Evaporator Fan Options Larger Fan Motor - AC Motor - Per Fan			
Electrical Input Power	kW	3.5	N/A
Full Load Amps	A	11.14	N/A
Locked Rotor Amps	A	77.98	N/A
Standard Size Motor - EC Motor - Per Fan			
Electrical Input Power	kW	2.63	2.63
Full Load Amps	A	9.8	9.8
Condenser Fan Options Standard Condenser Motor - EC Motor - Per Fan			
Electrical Input Power	kW	0.73	0.73
Full Load Amps	A	3.3	3.3

Mechanical

(1) Entering air 24°C/45% RH ambient 35°C.
(2) Fan Gain / Fan power input based upon fan operating with design airflow at 25Pa ESP, These values may change with different ESP.
(3) With Standard forward curved fan motors; Machine weight includes a refrigerant charge.
(4) Backward curved EC fan options quote electrical power. All other options quote shaft power.
(5) For refrigerant charges, refer to ***Unit Refrigerant Charge (kg/Circuit)***.
(6) Based on air temperature of 15.5°C leaving the evaporator coil.
(7) Based upon low pressure hot water 82°C inlet / 71°C outlet. Air on 20°C. Refer to ***Low Pressure Hot Water***.

Electrical

(1) Values given for full function units (incl. electric heating, humidification and matched condenser) at 7°C evaporating and 54.4°C condensing with standard forward curved fan motors, for optional data, please contact Airedale.
(2) Values given for Cooling only units (incl. Compressor, evaporator fan and matched condenser) at 7°C evaporating and 54.4°C condensing, for optional data, please contact Airedale.
(3) Electrical input power relates to the maximum absorbed electrical power. Actual operating fan power input is shown in the mechanical data tables.

Technical Data Downflow Units X Type DF35X - DF45X

Mechanical Data

			DF35X-EZRE-2	DF40X-EZRE-2	DF45X-EZRE-2
Standard Condenser Match			CR50	CR65	CR80
Capacity					
Nominal Cooling	(1)	kW	35.9	41.1	46.3
Capacity Steps			1	1	1
Dimensions - W x D x H		mm	1835 x 750 x 1940	1835 x 750 x 1940	1835 x 750 x 1940
Weight	(3)	kg	477	500	553
Construction			Panels: Galvanised Sheet Steel, Epoxy Baked		
Material/Colour			Powder Paint - Black, (RAL7021)		
			Frame: Aluminium Frame With Aluminium Corners		
Evaporator			Rifled Copper Tube / Turbulated Hydrophilic Coated Aluminium Fins		
Cooling/Dehum Stages			1/1	1/1	1/1
Evaporator Fan					
Motor - AC Motor			Centrifugal Forward Curved AC - Designed To 25Pa ESP		
Fan Transmission Type			Belt & Pulley		
Quantity			1	1	1
Motor Shaft Power	(4)	kW	4.0	5.5	5.5
Maximum ESP		Pa	165	175	175
Nominal Airflow		m³/s	3.30	3.70	3.70
Compressor - Scroll				Single	
Quantity			1	1	1
Oil Charge Volume (Total)		l	3.30	3.30	6.70
Oil Type				Polyol Ester	
Refrigeration	(5)			Single Circuit	
Refrigeration Control & Type				Thermostatic Expansion Valve (Optional EEV) / R410A	
Holding Charge				Inert Gas	
Connections					
Liquid (Sweat)		in	1/2	5/8	5/8
Discharge (Sweat)		in	7/8	1 1/8	1 1/8
Filtration			Disposable To ISO16890- ISO-C-75 - 75mm		
Quantity			3	3	3
OPTIONAL EXTRAS					
Larger Condenser Match			CR65	CR80	CR105
Nominal Cooling		kW	33.8	37.7	42.5
Hot Gas Reheat	(6)				
Nom Heating (Gross)		kW	19.4	20.3	20.3
Electric Heating (Total)		kW	20.0	20.0	20.0
Humidifier					
Capacity		kg/hr	3.0 - 15.0	3.0 - 15.0	3.0 - 15.0
Feed/Drain			3/4" BSPF Braided Flexible Hose / 19 mm Hose Connection		
Condensate Pump					
Head		m	5	5	5
Flow		l/m	10.8	10.8	10.8
Drain			10mm Stainless Steel Stub Connection		
Evaporator Fan Options:					
Larger Fan Motor - AC Motor			Centrifugal Forward Curved AC - Designed to 25Pa ESP		
Fan Transmission Type			Belt & Pulley		
Quantity			1	N/A	N/A
Motor Shaft Power	(4)	kW	5.5	N/A	N/A
Speed @ Maximum ESP		rpm	1196	N/A	N/A
Maximum ESP		Pa	322	N/A	N/A
Optional Fan - EC Motor			Centrifugal Backward Curved DD EC - Designed To 25Pa ESP		
Fan Transmission Type			Direct Drive		
Quantity			2	2	2
Motor Shaft Power	(4)	kW	N/A	N/A	N/A
Speed @ 25Pa / Maximum ESP		rpm	1895 / 2165	2135 / 2165	2135 / 2165
Maximum ESP		Pa	285	70	70
Low Pressure Hot Water	(7)		Copper Tube / Aluminium Fin		
Capacity Gross		kW	30	31.5	31.5
Water Flow (Nominal)		l/s	0.67	0.7	0.7
LPHW Connection Sizes		mm	22	22	22

Technical Data Downflow Units X Type DF35X - DF45X

Electrical Data

Standard Condenser Match - X		DF35X-EZRE-2 CR50	DF40X-EZRE-2 CR65	DF45X-EZRE-2 CR80
Unit Data Full Function - X				
Nominal Run Amps	A	120.1	132.8	142.1
Maximum Start Amps	A	347.0	390.0	435.1
Recommended Mains Fuse Size	A	160	160	160
Unit Data Cooling Only - X				
Nominal Run Amps	A	61.1	73.7	83.0
Maximum Start Amps	A	288.0	331.0	376.0
Recommended Mains Fuse Size	A	80	100	100
Max Mains Incoming Cable Size	mm^2	95	95	95
Mains Supply	V		220V / 3PH / 60HZ	
Control Circuit	VAC	24	24	24
Evaporator Fan - Motor Per Fan				
Electrical Input Power	kW	4.6	5.5	5.5
Full Load Amps	A	14.45	20.46	20.46
Locked Rotor Amps	A	101.15	157.5	157.5
Compressor - Per Compressor				
Quantity x Motor Size	kW	1 x 13.98	1 x 16.07	1 x 18.09
Nominal Run Amps	A	40.11	46.72	53.0
Locked Rotor Amps	A	267	304	346
Type of Start				
Standard Condenser Match - AC Motor - Per Fan				
Electrical Input Power	kW	0.64	0.64	0.64
Full Load Amps	A	3.02	3.02	3.02
OPTIONAL EXTRAS				
Electric Heating				
Stage of Reheat		3	3	3
Number of Elements		8	8	8
Rating	kW	20	20	20
Curent per Phase	A	59.05	59.05	59.05
Humidifier				
Capacity	kg/hr	15	15	15
Rating	kW	11.25	11.25	11.25
Full Load Amps	A	29.52	29.52	29.52
Evaporator Fan Options Larger Fan Motor - AC Motor - Per Fan				
Electrical Input Power	kW	6.3	N/A	N/A
Full Load Amps	A	25.63	N/A	N/A
Locked Rotor Amps	A	197.35	N/A	N/A
Standard Size Motor - EC Motor - Per Fan				
Electrical Input Power	kW	2.63	2.63	2.63
Full Load Amps	A	9.8	9.8	9.8
Condenser Fan Options Standard Condenser Motor - EC Motor - Per Fan				
Electrical Input Power	kW	0.73	0.73	0.73
Full Load Amps	A	3.3	3.3	3.3

Mechanical

(1) Entering air 24°C/45% RH ambient 35°C.
(2) Fan Gain / Fan power input based upon fan operating with design airflow at 25Pa ESP, These values may change with different ESP.
(3) With Standard forward curved fan motors; Machine weight includes a refrigerant charge.
(4) Backward curved EC fan options quote electrical power. All other options quote shaft power.
(5) For refrigerant charges, refer to ***Unit Refrigerant Charge (kg/Circuit)***.
(6) Based on air temperature of 15.5°C leaving the evaporator coil.
(7) Based upon low pressure hot water 82°C inlet / 71°C outlet. Air on 20°C. Refer to ***Low Pressure Hot Water***.

Electrical

(1) Values given for full function units (incl. electric heating, humidification and matched condenser) at 7°C evaporating and 54.4°C condensing with standard forward curved fan motors, for optional data, please contact Airedale.
(2) Values given for Cooling only units (incl. Compressor, evaporator fan and matched condenser) at 7°C evaporating and 54.4°C condensing, for optional data, please contact Airedale.
(3) Electrical input power relates to the maximum absorbed electrical power. Actual operating fan power input is shown in the mechanical data tables.

Technical Data Downflow Units X Type DF50X2 - DF60X2

Mechanical Data

			DF50X2-EZRE-2	DF55X2-EZRE-2	DF60X2-EZRE-2
Standard Condenser Match			CR80	CR80	CR80
Capacity					
Nominal Cooling	(1)	kW	52.2	59.2	66.1
Capacity Steps			2	2	2
Dimensions - W x D x H		mm	2170 x 750 x 1940	2170 x 750 x 1940	2170 x 750 x 1940
Weight	(3)	kg	621	638	638
Construction			Panels: Galvanised Sheet Steel, Epoxy Baked		
Material/Colour			Powder Paint - Black, (RAL7021)		
			Frame: Aluminium Frame With Aluminium Corners		
Evaporator			Rifled Copper Tube / Turbulated Hydrophilic Coated Aluminium Fins		
Cooling/Dehum Stages			2/1	2/1	2/1
Evaporator Fan					
Motor - AC Motor			Centrifugal Forward Curved AC - Designed To 25Pa ESP		
Fan Transmission Type			Belt & Pulley		
Quantity			2	2	2
Motor Shaft Power	(4)	kW	2.2	2.2	3
Maximum ESP		Pa	35	35	75
Nominal Airflow		m^3/s	4.20	4.20	4.60
Compressor - Scroll				Tandem	
Quantity			2	2	2
Oil Charge Volume (Total)		l	6.60	6.60	6.60
Oil Type			Polyol Ester		
Refrigeration	(5)		Single Circuit		
Refrigeration Control & Type			Thermostatic Expansion Valve (Optional EEV) / R410A		
Holding Charge			Inert Gas		
Connections					
Liquid (Sweat)		in	5/8	5/8	5/8
Discharge (Sweat)		in	1 3/8	1 3/8	1 3/8
Filtration			Disposable To ISO16890- ISO-C-75 - 75mm		
Quantity			4	4	4
OPTIONAL EXTRAS					
Larger Condenser Match			CR105	CR105	CR105
Nominal Cooling		kW	49.5	55.8	62.3
Hot Gas Reheat	(6)				
Nom Heating (Gross)		kW	25.9	25.9	26.9
Electric Heating (Total)		kW	30.0	30.0	30.0
Humidifier					
Capacity		kg/hr	3.0 - 15.0	3.0 - 15.0	3.0 - 15.0
Feed/Drain			3/4" BSPF Braided Flexible Hose / 19 mm Hose Connection		
Condensate Pump					
Head		m	5	5	5
Flow		l/m	10.8	10.8	10.8
Drain			10mm Stainless Steel Stub Connection		
Evaporator Fan Options:					
Larger Fan Motor - AC Motor			Centrifugal Forward Curved AC - Designed to 25Pa ESP		
Fan Transmission Type			Belt & Pulley		
Quantity			2	2	2
Motor Shaft Power	(4)	kW	3.0 / 4.0	3.0 / 4.0	4
Speed @ Maximum ESP		rpm	1448 / 1498	1448 / 1498	1497
Maximum ESP		Pa	310 / 360	310 / 360	275
Optional Fan - EC Motor			Centrifugal Backward Curved DD EC - Designed To 25Pa ESP		
Fan Transmission Type			Direct Drive		
Quantity			2	2	2
Motor Shaft Power	(4)	kW	N/A	N/A	N/A
Speed @ 25Pa / Maximum ESP		rpm	1265 / 1510	1265 / 1510	1390 / 1510
Maximum ESP		Pa	320	320	185
Low Pressure Hot Water	(7)		Copper Tube / Aluminium Fin		
Capacity Gross		kW	38.3	38.3	39.8
Water Flow (Nominal)		l/s	0.85	0.85	0.89
LPHW Connection Sizes		mm	22	22	22

Technical Data Downflow Units X Type DF50X2 - DF60X2

Electrical Data

Standard Condenser Match - X		DF50X2-EZRE-2 CR80	DF55X2-EZRE-2 CR80	DF60X2-EZRE-2 CR80
Unit Data Full Function - X				
Nominal Run Amps	A	168.0	179.3	190.8
Maximum Start Amps	A	339.5	412.1	417.7
Recommended Mains Fuse Size	A	200	200	250
Unit Data Cooling Only - X				
Nominal Run Amps	A	89.3	100.5	112.1
Maximum Start Amps	A	260.8	333.4	339.0
Recommended Mains Fuse Size	A	100	125	125
Max Mains Incoming Cable Size	mm²	185	185	185
Mains Supply	V		220V / 3PH / 60HZ	
Control Circuit	VAC	24	24	24
Evaporator Fan - Motor Per Fan				
Electrical Input Power	kW	2.6	2.6	3.5
Full Load Amps	A	8.37	8.37	11.14
Locked Rotor Amps	A	58.59	58.59	77.98
Compressor - Per Compressor				
Quantity x Motor Size	kW	2 x 10.79	2 x 12.36	2 x 13.98
Nominal Run Amps	A	31.48	37.12	40.11
Locked Rotor Amps	A	203	270	267
Type of Start				
Standard Condenser Match - AC Motor - Per Fan				
Electrical Input Power	kW	0.64	0.64	0.64
Full Load Amps	A	3.02	3.02	3.02
OPTIONAL EXTRAS				
Electric Heating				
Stage of Reheat		3	3	3
Number of Elements		12	12	12
Rating	kW	30	30	30
Curent per Phase	A	78.73	78.73	78.73
Humidifier				
Capacity	kg/hr	15	15	15
Rating	kW	11.25	11.25	11.25
Full Load Amps	A	29.52	29.52	29.52
Evaporator Fan Options Larger Fan Motor - AC Motor - Per Fan				
Electrical Input Power	kW	3.5	3.5	4.6
Full Load Amps	A	11.14	11.14	14.45
Locked Rotor Amps	A	77.98	77.98	101.15
Standard Size Motor - EC Motor - Per Fan				
Electrical Input Power	kW	2.9	2.9	2.9
Full Load Amps	A	9.2	9.2	9.2
Condenser Fan Options Standard Condenser Motor - EC Motor - Per Fan				
Electrical Input Power	kW	0.73	0.73	0.73
Full Load Amps	A	3.3	3.3	3.3

Mechanical

(1) Entering air 24°C/45% RH ambient 35°C.
(2) Fan Gain / Fan power input based upon fan operating with design airflow at 25Pa ESP, These values may change with different ESP.
(3) With Standard forward curved fan motors; Machine weight includes a refrigerant charge.
(4) Backward curved EC fan options quote electrical power. All other options quote shaft power.
(5) For refrigerant charges, refer to ***Unit Refrigerant Charge (kg/Circuit)***.
(6) Based on air temperature of 15.5°C leaving the evaporator coil.
(7) Based upon low pressure hot water 82°C inlet / 71°C outlet. Air on 20°C. Refer to ***Low Pressure Hot Water***.

Electrical

(1) Values given for full function units (incl. electric heating, humidification and matched condenser) at 7°C evaporating and 54.4°C condensing with standard forward curved fan motors, for optional data, please contact Airedale.
(2) Values given for Cooling only units (incl. Compressor, evaporator fan and matched condenser) at 7°C evaporating and 54.4°C condensing, for optional data, please contact Airedale.
(3) Electrical input power relates to the maximum absorbed electrical power. Actual operating fan power input is shown in the mechanical data tables.

Technical Data Upflow Units X Type - 2

Performance Data

Cooling Capacity (1)		Ambient							
	Air On	25°C		30°C		35°C		40°C	
	(DB°C/%RH)	TC (kW)	SC (kW)	TC (kW)	SC (kW)	TC (kW)	SC (kW)	TC (kW)	SC (kW)
V8X-EZRE-2 / CR16M	22/50	9.1	8.8	9.1	8.8	9.1	8.8	8.7	8.5
	24/45	9.4	9.3	9.4	9.3	9.4	9.3	9.0	9.0
	26/40	9.7	9.7	9.7	9.7	9.7	9.7	9.3	9.3
V10X-EZRE-2 / CR16M	22/50	10.1	10.1	10.1	10.1	10.0	10.0	9.5	9.5
	24/45	10.4	10.4	10.4	10.4	10.3	10.3	9.8	9.8
	26/40	10.8	10.8	10.8	10.8	10.6	10.6	10.1	10.1
V13X-EZRE-2 / CR22M	22/50	13.1	12.2	13.1	12.2	13.0	12.2	12.4	11.8
	24/45	13.5	13.2	13.5	13.2	13.4	13.2	12.8	12.8
	26/40	13.9	13.9	13.9	13.9	13.8	13.8	13.2	13.2
V15X-EZRE-2 / CR22M	22/50	15.8	14.9	15.8	14.9	15.5	14.7	14.7	14.3
	24/45	16.3	15.8	16.3	15.8	15.9	15.5	15.2	15.1
	26/40	16.8	16.8	16.8	16.8	16.4	16.4	15.6	15.6
V17X-EZRE-2 / CR30M	22/50	19.0	16.9	19.0	16.9	18.7	16.8	17.8	16.3
	24/45	19.5	18.1	19.5	18.1	19.2	17.9	18.3	17.4
	26/40	20.0	19.4	20.0	19.4	19.6	19.2	18.8	18.7
V20X2-EZRE-2 / CR30M	22/50	23.7	21.5	23.7	21.5	22.8	21.0	21.6	20.3
	24/45	24.4	23.2	24.4	23.2	23.4	22.6	22.2	21.9
	26/40	25.0	24.7	25.0	24.7	24.0	24.0	22.8	22.8
V22X2-EZRE-2 / CR50M	22/50	24.3	23.2	24.3	23.2	24.3	23.2	23.3	22.6
	24/45	25.1	24.9	25.1	24.9	25.1	24.9	24.1	24.1
	26/40	25.8	25.8	25.8	25.8	25.8	25.8	24.8	24.8
V28X-EZRE-2 / CR50M	22/50	26.6	26.6	26.6	26.6	26.6	26.6	25.4	25.4
	24/45	27.7	27.7	27.7	27.7	27.7	27.7	26.4	26.4
	26/40	28.8	28.8	28.8	28.8	28.7	28.7	27.5	27.5
V31X-EZRE-2 / CR50M	22/50	30.8	30.8	30.8	30.8	30.6	30.6	29.1	29.1
	24/45	32.0	32.0	32.0	32.0	31.7	31.7	30.3	30.3
	26/40	33.3	33.3	33.3	33.3	32.9	32.9	31.5	31.5

Technical Data Upflow Units X Type -2

Performance Data

Cooling Capacity (1)		Ambient							
	Air On	25°C		30°C		35°C		40°C	
	(DB°C/%RH)	TC (kW)	SC (kW)	TC (kW)	SC (kW)	TC (kW)	SC (kW)	TC (kW)	SC (kW)
V31X2-EZRE-2 / CR50M	22/50	30.7	30.7	30.7	30.7	30.5	30.5	29.0	29.0
	24/45	31.9	31.9	31.9	31.9	31.6	31.6	30.1	30.1
	26/40	33.1	33.1	33.1	33.1	32.7	32.7	31.3	31.3
V35X-EZRE-2 / CR50M	22/50	35.9	35.9	35.9	35.9	35.2	35.2	33.5	33.5
	24/45	37.3	37.3	37.3	37.3	36.5	36.5	34.8	34.8
	26/40	38.9	38.9	38.9	38.9	37.9	37.9	36.3	36.3
V35X2-EZRE-2 / CR50M	22/50	38.3	38.3	38.3	38.3	37.2	37.2	35.4	35.4
	24/45	39.6	39.6	39.6	39.6	38.4	38.4	36.6	36.6
	26/40	40.9	40.9	40.9	40.9	39.7	39.7	38.0	38.0
V40X-EZRE-2 / CR65M	22/50	40.6	40.6	40.6	40.6	40.3	40.3	38.4	38.4
	24/45	42.2	42.2	42.2	42.2	41.8	41.8	39.9	39.9
	26/40	43.8	43.8	43.8	43.8	43.3	43.3	41.5	41.5
V40X2-EZRE-2 / CR65M	22/50	43.7	43.7	43.7	43.7	43.2	43.2	41.1	41.1
	24/45	45.2	45.2	45.2	45.2	44.6	44.6	42.5	42.5
	26/40	46.7	46.7	46.7	46.7	45.9	45.9	44.0	44.0
V45X2-EZRE-2 / CR80M	22/50	50.0	47.8	50.0	47.8	49.8	47.7	47.3	46.1
	24/45	51.6	51.3	51.6	51.3	51.2	51.1	48.8	48.8
	26/40	53.1	53.1	53.1	53.1	52.6	52.6	50.3	50.3
V50X2-EZRE-2 / CR80M	22/50	51.7	50.8	51.7	50.8	51.2	50.5	48.7	48.7
	24/45	53.6	53.6	53.6	53.6	53.0	53.0	50.4	50.4
	26/40	55.5	55.5	55.5	55.5	54.8	54.8	52.2	52.2
V55X2-EZRE-2 / CR80M	22/50	59.5	55.5	59.5	55.5	58.3	54.8	55.4	53.0
	24/45	61.6	59.7	61.6	59.7	60.1	58.8	57.2	56.9
	26/40	63.5	63.5	63.5	63.5	61.9	61.9	59.0	59.0
V60X2-EZRE-2 / CR80M	22/50	67.5	62.1	67.5	62.1	65.1	60.7	61.7	58.6
	24/45	69.8	66.7	69.8	66.7	67.1	65.0	63.6	62.8
	26/40	71.9	71.4	71.9	71.4	69.0	69.0	65.5	65.5

Technical Data Upflow Units X Type - 2

Performance Data Larger Condenser

Cooling Capacity (1)		Ambient									
	Air On	25°C		30°C		35°C		40°C		46°C	
	(DB°C/%RH)	TC (kW)	SC (kW)	TC (kW)	SC (kW)	TC (kW)	SC (kW)	TC (kW)	SC (kW)	TC (kW)	SC (kW)
V8X-EZRE-2 / CR22M	22/50	9.1	8.8	9.1	8.8	9.1	8.8	8.9	8.6	8.5	8.4
	24/45	9.4	9.3	9.4	9.3	9.4	9.3	9.1	9.1	8.8	8.8
	26/40	9.7	9.7	9.7	9.7	9.7	9.7	9.4	9.4	9.0	9.0
V10X-EZRE-2 / CR22M	22/50	10.1	10.1	10.1	10.1	10.1	10.1	9.7	9.7	9.2	9.2
	24/45	10.4	10.4	10.4	10.4	10.4	10.4	10.0	10.0	9.5	9.5
	26/40	10.8	10.8	10.8	10.8	10.8	10.8	10.3	10.3	9.8	9.8
V13X-EZRE-2 / CR30M	22/50	13.1	12.2	13.1	12.2	13.1	12.2	12.6	11.9	12.0	11.6
	24/45	13.5	13.2	13.5	13.2	13.5	13.2	13.0	12.9	12.4	12.4
	26/40	13.9	13.9	13.9	13.9	13.9	13.9	13.4	13.4	12.8	12.8
V15X-EZRE-2 / CR30M	22/50	15.8	14.9	15.8	14.9	15.8	14.9	15.1	14.5	14.3	14.0
	24/45	16.3	15.8	16.3	15.8	16.3	15.7	15.5	15.3	14.7	14.7
	26/40	16.8	16.8	16.8	16.8	16.7	16.7	16.0	16.0	15.2	15.2
V17X-EZRE-2 / CR50M	22/50	19.0	16.9	19.0	16.9	19.0	16.9	18.5	16.7	17.7	16.2
	24/45	19.5	18.1	19.5	18.1	19.5	18.1	19.0	17.8	18.2	17.3
	26/40	20.0	19.4	20.0	19.4	20.0	19.4	19.4	19.1	18.6	18.6
V20X2-EZRE-2 / CR50M	22/50	23.7	21.5	23.7	21.5	23.7	21.5	22.7	21.0	21.6	20.3
	24/45	24.4	23.2	24.4	23.2	24.4	23.2	23.4	22.6	22.2	21.9
	26/40	25.0	24.7	25.0	24.7	25.0	24.7	24.0	24.0	22.9	22.9
V22X2-EZRE-2 / CR65M	22/50	24.3	23.2	24.3	23.2	24.3	23.2	23.7	22.9	22.7	22.2
	24/45	25.1	24.9	25.1	24.9	25.1	24.9	24.5	24.5	23.4	23.4
	26/40	25.8	25.8	25.8	25.8	25.8	25.8	25.2	25.2	24.1	24.1
V28X-EZRE-2 / CR65M	22/50	26.6	26.6	26.6	26.6	26.6	26.6	25.8	25.8	24.6	24.6
	24/45	27.7	27.7	27.7	27.7	27.7	27.7	26.8	26.8	25.7	25.7
	26/40	28.8	28.8	28.8	28.8	28.8	28.8	27.9	27.9	26.8	26.8

Technical Data Upflow Units X Type - 2

Performance Data Larger Condenser

Cooling Capacity (1)		Ambient									
	Air On	25°C		30°C		35°C		40°C		46°C	
	(DB°C/%RH)	TC (kW)	SC (kW)	TC (kW)	SC (kW)	TC (kW)	SC (kW)	TC (kW)	SC (kW)	TC (kW)	SC (kW)
V31X-EZRE-2 / CR65M	22/50	30.8	30.8	30.8	30.8	30.8	30.8	29.7	29.7	28.3	28.3
	24/45	32.0	32.0	32.0	32.0	32.0	32.0	30.9	30.9	29.5	29.5
	26/40	33.3	33.3	33.3	33.3	33.3	33.3	32.1	32.1	30.8	30.8
V31X2-EZRE-2 / CR65M	22/50	30.7	30.7	30.7	30.7	30.7	30.7	29.6	29.6	28.2	28.2
	24/45	31.9	31.9	31.9	31.9	31.9	31.9	30.7	30.7	29.3	29.3
	26/40	33.1	33.1	33.1	33.1	33.1	33.1	31.9	31.9	30.6	30.6
V35X-EZRE-2 / CR65M	22/50	35.9	35.9	35.9	35.9	35.9	35.9	34.3	34.3	32.5	32.5
	24/45	37.3	37.3	37.3	37.3	37.3	37.3	35.6	35.6	33.9	33.9
	26/40	38.9	38.9	38.9	38.9	38.8	38.8	37.1	37.1	35.5	35.5
V35X2-EZRE-2 / CR65M	22/50	38.3	38.3	38.3	38.3	38.2	38.2	36.3	36.3	34.4	34.4
	24/45	39.6	39.6	39.6	39.6	39.4	39.4	37.6	37.6	35.7	35.7
	26/40	40.9	40.9	40.9	40.9	40.6	40.6	38.9	38.9	37.1	37.1
V40X-EZRE-2 / CR80M	22/50	40.6	40.6	40.6	40.6	40.6	40.6	39.0	39.0	37.1	37.1
	24/45	42.2	42.2	42.2	42.2	42.2	42.2	40.5	40.5	38.7	38.7
	26/40	43.8	43.8	43.8	43.8	43.8	43.8	42.1	42.1	40.4	40.4
V40X2-EZRE-2 / CR80M	22/50	43.7	43.7	43.7	43.7	43.7	43.7	41.8	41.8	39.7	39.7
	24/45	45.2	45.2	45.2	45.2	45.2	45.2	43.2	43.2	41.2	41.2
	26/40	46.7	46.7	46.7	46.7	46.7	46.7	44.7	44.7	42.7	42.7
V45X2-EZRE-2 / CR105M	22/50	50.0	47.8	50.0	47.8	50.0	47.8	48.1	46.6	45.7	45.1
	24/45	51.6	51.3	51.6	51.3	51.6	51.3	49.5	49.5	47.2	47.2
	26/40	53.1	53.1	53.1	53.1	53.1	53.1	51.0	51.0	48.7	48.7
V50X2-EZRE-2 / CR105M	22/50	51.7	50.8	51.7	50.8	51.7	50.8	49.5	49.3	46.9	46.9
	24/45	53.6	53.6	53.6	53.6	53.6	53.6	51.3	51.3	48.6	48.6
	26/40	55.5	55.5	55.5	55.5	55.5	55.5	53.1	53.1	50.4	50.4
V55X2-EZRE-2 / CR105M	22/50	59.5	55.5	59.5	55.5	59.3	55.4	56.5	53.7	53.4	51.7
	24/45	61.6	59.7	61.6	59.7	61.2	59.5	58.4	57.7	55.2	55.2
	26/40	63.5	63.5	63.5	63.5	63.0	63.0	60.2	60.2	56.9	56.9
V60X2-EZRE-2 / CR105M	22/50	67.5	62.1	67.5	62.1	66.6	61.6	63.2	59.6	59.3	57.1
	24/45	69.8	66.7	69.8	66.7	68.6	65.9	65.2	63.8	61.2	61.2
	26/40	71.9	71.4	71.9	71.4	70.6	70.5	67.2	67.2	63.1	63.1

Technical Data Upflow Units X Type - 2

Noise Data

	Sound Measurement		Overall dB(A)	Frequency (Hz) dB 63	125	250	500	1000	2000	4000	8000
V8X	Discharge Air	Power	78	71	75	74	73	73	72	65	60
	Return Air	Power	63	68	71	63	58	59	53	48	41
	Case Breakout	Power	63	68	71	63	58	59	53	48	41
	Sound @ 3m	Pressure	49	53	57	49	43	44	39	33	26
V10X	Discharge Air	Power	81	74	78	77	76	76	75	68	63
	Return Air	Power	66	71	74	66	61	62	56	50	43
	Case Breakout	Power	66	71	74	66	61	62	56	50	43
	Sound @ 3m	Pressure	51	56	61	52	46	47	41	36	29
V13X	Discharge Air	Power	78	72	75	73	73	73	72	65	60
	Return Air	Power	63	69	71	63	58	59	53	48	42
	Case Breakout	Power	63	69	71	63	58	59	53	48	42
	Sound @ 3m	Pressure	48	54	57	48	43	44	38	34	27
V15X	Discharge Air	Power	74	71	76	73	70	69	68	63	58
	Return Air	Power	62	68	72	63	56	56	49	48	42
	Case Breakout	Power	62	68	72	63	56	56	49	48	42
	Sound @ 3m	Pressure	47	53	57	48	41	42	35	34	27
V17X	Discharge Air	Power	78	75	79	77	74	73	71	67	62
	Return Air	Power	65	72	75	67	59	59	53	51	44
	Case Breakout	Power	65	72	75	67	59	59	53	51	44
	Sound @ 3m	Pressure	50	57	61	52	44	44	38	36	30
V20X2	Discharge Air	Power	82	75	79	78	77	78	76	69	64
	Return Air	Power	67	73	75	67	62	63	57	52	46
	Case Breakout	Power	67	73	75	67	62	63	57	52	46
	Sound @ 3m	Pressure	53	58	61	53	48	48	42	37	31
V22X2	Discharge Air	Power	86	80	84	82	81	82	80	73	68
	Return Air	Power	71	77	80	71	66	67	61	55	49
	Case Breakout	Power	71	77	80	71	66	67	61	55	49
	Sound @ 3m	Pressure	57	62	65	57	52	52	46	41	35
V28X	Discharge Air	Power	90	102	95	86	84	85	81	81	78
	Return Air	Power	79	89	80	79	76	75	68	63	57
	Case Breakout	Power	79	89	80	79	76	75	68	63	57
	Sound @ 3m	Pressure	64	75	65	65	62	60	53	49	42
V31X2	Discharge Air	Power	93	105	96	89	86	88	84	84	82
	Return Air	Power	81	91	80	82	77	77	70	66	60
	Case Breakout	Power	81	91	80	82	77	77	70	66	60
	Sound @ 3m	Pressure	66	76	66	67	63	62	55	51	46

(1) dB(A) is the overall sound level, measured on the A scale

(2) All sound data measured at nominal conditions, Discharge Air, Return air and case breakout is sound power.

Technical Data Upflow Units WX Type - 2

Noise Data

	Sound Measurement		Overall dB(A)	Frequency (Hz) dB 63	125	250	500	1000	2000	4000	8000
V35X	Discharge Air	Power	92	111	98	90	87	82	82	83	80
	Return Air	Power	81	97	82	84	80	72	69	66	58
	Case Breakout	Power	81	97	82	84	80	72	69	66	58
	Sound @ 3m	Pressure	67	82	68	69	66	58	54	51	44
V35X2	Discharge Air	Power	92	111	98	90	87	82	82	83	80
	Return Air	Power	81	97	82	84	79	72	69	66	59
	Case Breakout	Power	81	97	82	84	79	72	69	66	59
	Sound @ 3m	Pressure	66	82	68	69	65	58	54	51	45
V40X	Discharge Air	Power	94	113	99	92	89	84	85	85	83
	Return Air	Power	83	98	84	85	82	74	71	68	61
	Case Breakout	Power	83	98	84	85	82	74	71	68	61
	Sound @ 3m	Pressure	68	84	69	71	67	59	56	53	46
V40X2	Discharge Air	Power	94	113	99	92	89	84	85	85	83
	Return Air	Power	82	98	84	85	81	74	71	68	62
	Case Breakout	Power	82	98	84	85	81	74	71	68	62
	Sound @ 3m	Pressure	68	85	69	71	66	59	56	53	47
V45X2	Discharge Air	Power	94	113	99	92	89	84	85	85	83
	Return Air	Power	83	98	84	85	83	74	71	68	62
	Case Breakout	Power	83	98	84	85	83	74	71	68	62
	Sound @ 3m	Pressure	69	84	69	71	68	59	57	53	47
V50X2	Discharge Air	Power	97	115	109	95	92	84	86	84	80
	Return Air	Power	84	99	93	86	83	74	71	66	58
	Case Breakout	Power	84	99	93	86	83	74	71	66	58
	Sound @ 3m	Pressure	70	85	79	72	68	60	57	52	43
V55X2	Discharge Air	Power	97	115	109	95	92	84	86	84	80
	Return Air	Power	84	99	93	86	83	74	72	66	58
	Case Breakout	Power	84	99	93	86	83	74	72	66	58
	Sound @ 3m	Pressure	70	85	79	72	68	60	57	52	43
V60X2	Discharge Air	Power	98	116	110	97	93	86	87	86	82
	Return Air	Power	86	102	94	89	85	76	73	69	60
	Case Breakout	Power	86	102	94	89	85	76	73	69	60
	Sound @ 3m	Pressure	72	87	80	75	70	61	59	54	46

(1) dB(A) is the overall sound level, measured on the A scale
(2) All sound data measured at nominal conditions, Discharge Air, Return air and case breakout is sound power.

Technical Data Upflow Units X Type V8X - V10X

Mechanical Data

			V8X-EZRE-2	V10X-EZRE-2
Standard Condenser Match			CR16	CR16
Capacity				
Nominal Cooling	(1)	kW	9.4	10.3
Capacity Steps			1	1
Dimensions - W x D x H		mm	670 x 670 x 1940	670 x 670 x 1940
Weight	(3)	kg	173	177
Construction			Panels: Galvanised Sheet Steel, Epoxy Baked	
Material/Colour			Powder Paint - Black, (RAL7021)	
			Frame: Aluminium Frame With Aluminium Corners	
Evaporator			Rifled Copper Tube / Turbulated Hydrophilic Coated Aluminium Fins	
Cooling/Dehum Stages			1/1	1/1
Evaporator Fan				
Motor - AC Motor			Centrifugal Forward Curved AC - Designed To 25Pa ESP	
Fan Transmission Type			Direct Drive	
Quantity			1	1
Motor Shaft Power	(4)	kW	N/A	N/A
Maximum ESP		Pa	209	222
Nominal Airflow		m³/s	0.75	0.95
Compressor - Scroll			Single	
Quantity			1	1
Oil Charge Volume (Total)		l	0.70	1.20
Oil Type			Polyol Ester	
Refrigeration	(5)		Single Circuit	
Refrigeration Control & Type			Thermostatic Expansion Valve (Optional EEV) / R410A	
Holding Charge			Inert Gas	
Connections				
Liquid (Sweat)		in	3/8	3/8
Discharge (Sweat)		in	1/2	1/2
Filtration			Disposable To ISO16890- ISO-C-75 - 50mm	
Quantity			1	1
OPTIONAL EXTRAS				
Larger Condenser Match			CR22	CR22
Nominal Cooling		kW	9.4	10.4
Hot Gas Reheat	(6)			
Nom Heating (Gross)		kW	4.9	5.5
Electric Heating (Total)		kW	7.5	7.5
Humidifier				
Capacity		kg/hr	0.6 - 3.0	0.6 - 3.0
Feed/Drain			3/4" BSPF Braided Flexible Hose / 19 mm Hose Connection	
Condensate Pump				
Head		m	8	8
Flow		l/m	5	5
Drain			10mm Stainless Steel Stub Connection	
Optional Fan - EC Motor			Centrifugal Backward Curved EC - Designed To 25Pa ESP	
Fan Transmission Type			Direct Drive	
Quantity			1	1
Motor Shaft Power	(4)	kW	N/A	N/A
Speed @ 25Pa / Maximum ESP		rpm	1705 / 2215	2140 / 2215
Maximum ESP		Pa	220	45
Low Pressure Hot Water	(7)		Copper Tube / Aluminium Fin	
Capacity Gross		kW	7.9	8.9
Water Flow (Nominal)		l/s	0.18	0.20
LPHW Connection Sizes		mm	22	22

Technical Data Upflow Units X Type V8X - V10X

Electrical Data

Standard Condenser Match - X		V8X-EZRE-2 CR16	V10X-EZRE-2 CR16
Unit Data Full Function - X			
Nominal Run Amps	A	40.9	43.3
Maximum Start Amps	A	124.9	126.0
Recommended Mains Fuse Size	A	50	50
Unit Data Cooling Only - X			
Nominal Run Amps	A	21.2	23.6
Maximum Start Amps	A	105.2	106.3
Recommended Mains Fuse Size	A	25	32
Max Mains Incoming Cable Size	mm²	35	35
Mains Supply	V	220V / 3PH / 60HZ	
Control Circuit	VAC	24	24
Evaporator Fan - Motor Per Fan			
Electrical Input Power	kW	1.6	2.2
Full Load Amps	A	8.5	9.6
Locked Rotor Amps	A	21.2	24
Compressor - Per Compressor			
Quantity x Motor Size	kW	1 x 3.95	1 x 4.43
Nominal Run Amps	A	11.0	12.3
Locked Rotor Amps	A	95	95
Type of Start			
Standard Condenser Match - AC Motor - Per Fan			
Electrical Input Power	kW	0.39	0.39
Full Load Amps	A	1.72	1.72
OPTIONAL EXTRAS			
Electric Heating			
Stage of Reheat		1	1
Number of Elements		3	3
Rating	kW	7.5	7.5
Curent per Phase	A	19.68	19.68
Humidifier			
Capacity	kg/hr	3	3
Rating	kW	2.25	2.25
Full Load Amps	A	5.90	5.90
Evaporator Fan Options Larger Fan Motor - AC Motor - Per Fan			
Electrical Input Power	kW	2.2	N/A
Full Load Amps	A	9.1	N/A
Locked Rotor Amps	A	22.75	N/A
Standard Size Motor - EC Motor - Per Fan			
Electrical Input Power	kW	0.94	0.94
Full Load Amps	A	3	3
Condenser Fan Options Standard Condenser Motor - EC Motor - Per Fan			
Electrical Input Power	kW	0.7	0.7
Full Load Amps	A	3.1	3.1

Mechanical

(1) Entering air 24°C/45% RH ambient 35°C.
(2) Fan Gain / Fan power input based upon fan operating with design airflow at 25Pa ESP, These values may change with different ESP.
(3) With Standard forward curved fan motors; Machine weight includes a refrigerant charge.
(4) Backward curved EC fan options quote electrical power. All other options quote shaft power.
(5) For refrigerant charges, refer to ***Unit Refrigerant Charge (kg/Circuit)***.
(6) Based on air temperature of 15.5°C leaving the evaporator coil.
(7) Based upon low pressure hot water 82°C inlet / 71°C outlet. Air on 20°C. Refer to ***Low Pressure Hot Water***.

Electrical

(1) Values given for full function units (incl. electric heating, humidification and matched condenser) at 7°C evaporating and 54.4°C condensing with standard forward curved fan motors, for optional data, please contact Airedale.
(2) Values given for Cooling only units (incl. Compressor, evaporator fan and matched condenser) at 7°C evaporating and 54.4°C condensing, for optional data, please contact Airedale.
(3) Electrical input power relates to the maximum absorbed electrical power. Actual operating fan power input is shown in the mechanical data tables.

Technical Data Downflow Units X Type V13X - V17X

Mechanical Data

			V13X-EZRE-2	V15X-EZRE-2	V17X-EZRE-2
Standard Condenser Match			CR22	CR22	CR30
Capacity					
Nominal Cooling	(1)	kW	13.4	15.9	19.2
Capacity Steps			1	1	1
Dimensions - W x D x H		mm	990 x 670 x 1940	990 x 670 x 1940	990 x 670 x 1940
Weight	(3)	kg	211	235	236
Construction			Panels: Galvanised Sheet Steel, Epoxy Baked		
Material/Colour			Powder Paint - Black, (RAL7021)		
			Frame: Aluminium Frame With Aluminium Corners		
Evaporator			Rifled Copper Tube / Turbulated Hydrophilic Coated Aluminium Fins		
Cooling/Dehum Stages			1/1	1/1	1/1
Evaporator Fan					
Motor - AC Motor			Centrifugal Forward Curved AC - Designed To 25Pa ESP		
Fan Transmission Type			Direct Drive		
Quantity			1	1	1
Motor Shaft Power	(4)	kW	N/A	N/A	N/A
Maximum ESP		Pa	298	127	42
Nominal Airflow		m³/s	1.00	1.20	1.40
Compressor - Scroll				Single	
Quantity			1	1	1
Oil Charge Volume (Total)		l	1.20	1.66	1.89
Oil Type				Polyol Ester	
Refrigeration	(5)			Single Circuit	
Refrigeration Control & Type				Thermostatic Expansion Valve (Optional EEV) / R410A	
Holding Charge				Inert Gas	
Connections					
Liquid (Sweat)		in	3/8	3/8	3/8
Discharge (Sweat)		in	5/8	5/8	5/8
Filtration				Disposable To ISO16890- ISO-C-75 - 50mm	
Quantity			2	2	2
OPTIONAL EXTRAS					
Larger Condenser Match			CR30	CR30	CR50
Nominal Cooling		kW	13.5	16.3	19.5
Hot Gas Reheat	(6)				
Nom Heating (Gross)		kW	6.8	7.7	8.2
Electric Heating (Total)		kW	7.5	7.5	7.5
Humidifier					
Capacity		kg/hr	0.6 - 3.0	0.6 - 3.0	0.6 - 3.0
Feed/Drain			3/4" BSPF Braided Flexible Hose / 19 mm Hose Connection		
Condensate Pump					
Head		m	8	8	8
Flow		l/m	5	5	5
Drain			10mm Stainless Steel Stub Connection		
Optional Fan - EC Motor			Centrifugal Backward Curved EC - Designed To 25Pa ESP		
Fan Transmission Type			Direct Drive		
Quantity			1	1	1
Motor Shaft Power	(4)	kW	N/A	N/A	N/A
Speed @ 25Pa / Maximum ESP		rpm	1125 / 1560	1330 / 1560	1560 / 1560
Maximum ESP		Pa	275	165	25
Low Pressure Hot Water	(7)			Copper Tube / Aluminium Fin	
Capacity Gross		kW	11.5	12.7	13.7
Water Flow (Nominal)		l/s	0.26	0.28	0.31
LPHW Connection Sizes		mm	22	22	22

Technical Data Downflow Units X Type V13X - V17X

Electrical Data

Standard Condenser Match - X		V13X-EZRE-2 CR22	V15X-EZRE-2 CR22	V17X-EZRE-2 CR30
Unit Data Full Function - X				
Nominal Run Amps	A	47.9	48.8	52.4
Maximum Start Amps	A	152.3	153.5	190.5
Recommended Mains Fuse Size	A	63	63	63
Unit Data Cooling Only - X				
Nominal Run Amps	A	28.2	29.1	32.8
Maximum Start Amps	A	132.6	133.8	170.8
Recommended Mains Fuse Size	A	40	40	40
Max Mains Incoming Cable Size	mm²	35	35	35
Mains Supply	V		220V / 3PH / 60HZ	
Control Circuit	VAC	24	24	24
Evaporator Fan - Motor Per Fan				
Electrical Input Power	kW	2.2	1.9	1.9
Full Load Amps	A	9.6	7.8	7.8
Locked Rotor Amps	A	24	19.5	19.5
Compressor - Per Compressor				
Quantity x Motor Size	kW	1 x 5,53	1 x 6.57	1 x 7.82
Nominal Run Amps	A	15.6	18.3	21.9
Locked Rotor Amps	A	120	123	160
Type of Start				
Standard Condenser Match - AC Motor - Per Fan				
Electrical Input Power	kW	0.64	0.64	0.64
Full Load Amps	A	3.02	3.02	3.02
OPTIONAL EXTRAS				
Electric Heating				
Stage of Reheat		1	1	1
Number of Elements		3	3	3
Rating	kW	7.5	7.5	7.5
Curent per Phase	A	19.68	19.68	19.68
Humidifier				
Capacity	kg/hr	3	3	3
Rating	kW	2.25	2.25	2.25
Full Load Amps	A	5.90	5.90	5.90
Evaporator Fan Options Larger Fan Motor - AC Motor - Per Fan				
Electrical Input Power	kW	N/A	N/A	N/A
Full Load Amps	A	N/A	N/A	N/A
Locked Rotor Amps	A	N/A	N/A	N/A
Standard Size Motor - EC Motor - Per Fan				
Electrical Input Power	kW	1.01	1.01	1.01
Full Load Amps	A	3.2	3.2	3.2
Condenser Fan Options Standard Condenser Motor - EC Motor - Per Fan				
Electrical Input Power	kW	0.73	0.73	0.73
Full Load Amps	A	3.3	3.3	3.3

Mechanical

(1) Entering air 24°C/45% RH ambient 35°C.
(2) Fan Gain / Fan power input based upon fan operating with design airflow at 25Pa ESP, These values may change with different ESP.
(3) With Standard forward curved fan motors; Machine weight includes a refrigerant charge.
(4) Backward curved EC fan options quote electrical power. All other options quote shaft power.
(5) For refrigerant charges, refer to ***Unit Refrigerant Charge (kg/Circuit)***.
(6) Based on air temperature of 15.5°C leaving the evaporator coil.
(7) Based upon low pressure hot water 82°C inlet / 71°C outlet. Air on 20°C. Refer to ***Low Pressure Hot Water***.

Electrical

(1) Values given for full function units (incl. electric heating, humidification and matched condenser) at 7°C evaporating and 54.4°C condensing with standard forward curved fan motors, for optional data, please contact Airedale.
(2) Values given for Cooling only units (incl. Compressor, evaporator fan and matched condenser) at 7°C evaporating and 54.4°C condensing, for optional data, please contact Airedale.
(3) Electrical input power relates to the maximum absorbed electrical power. Actual operating fan power input is shown in the mechanical data tables.

Technical Data Downflow Units X Type V20X2 - V26X2

Mechanical Data

			V20X2-EZRE-2	V22X2-EZRE-2
Standard Condenser Match			CR30	CR50
Capacity				
Nominal Cooling	(1)	kW	23.4	25.1
Capacity Steps			2	2
Dimensions - W x D x H		mm	1310 x 670 x 1940	1310 x 670 x 1940
Weight	(3)	kg	289	289
Construction			Panels: Galvanised Sheet Steel, Epoxy Baked	
Material/Colour			Powder Paint - Black, (RAL7021)	
			Frame: Aluminium Frame With Aluminium Corners	
Evaporator			Rifled Copper Tube / Turbulated Hydrophilic Coated Aluminium Fins	
Cooling/Dehum Stages			2/1	2/1
Evaporator Fan				
Motor - AC Motor			Centrifugal Forward Curved AC - Designed To 25Pa ESP	
Fan Transmission Type			Direct Drive	
Quantity			2	2
Motor Shaft Power	(4)	kW	N/A	N/A
Maximum ESP		Pa	203	55
Nominal Airflow		m³/s	1.70	2.00
Compressor - Scroll			Tandem	
Quantity			2	2
Oil Charge Volume (Total)		l	2.40	2.40
Oil Type			Polyol Ester	
Refrigeration	(5)		Single Circuit	
Refrigeration Control & Type			Thermostatic Expansion Valve (Optional EEV) / R410A	
Holding Charge			Inert Gas	
Connections				
Liquid (Sweat)		in	1/2	1/2
Discharge (Sweat)		in	7/8	7/8
Filtration			Disposable To ISO16890- ISO-C-75 - 50mm	
Quantity			3	3
OPTIONAL EXTRAS				
Larger Condenser Match			CR50	CR65
Nominal Cooling		kW	24.4	25.1
Hot Gas Reheat	(6)			
Nom Heating (Gross)		kW	11.8	12.7
Electric Heating (Total)		kW	15.0	15.0
Humidifier				
Capacity		kg/hr	0.6 - 3.0	0.6 - 3.0
Feed/Drain			3/4" BSPF Braided Flexible Hose / 19 mm Hose Connection	
Condensate Pump				
Head		m	8	8
Flow		l/m	5	5
Drain			10mm Stainless Steel Stub Connection	
Optional Fan - EC Motor			Centrifugal Backward Curved EC - Designed To 25Pa ESP	
Fan Transmission Type			Direct Drive	
Quantity			1	1
Motor Shaft Power	(4)	kW	N/A	N/A
Speed @ 25Pa / Maximum ESP		rpm	1830 / 2165	2165 / 2165
Maximum ESP		Pa	285	25
Low Pressure Hot Water	(7)		Copper Tube / Aluminium Fin	
Capacity Gross		kW	19.2	19.9
Water Flow (Nominal)		l/s	0.43	0.44
LPHW Connection Sizes		mm	22	22

Technical Data Downflow Units X Type V20X2 - V26X2

Electrical Data

Standard Condenser Match - X		V20X2-EZRE-2 CR30	V22X2-EZRE-2 CR50
Unit Data Full Function - X			
Nominal Run Amps	A	91.5	94.5
Maximum Start Amps	A	196.5	199.5
Recommended Mains Fuse Size	A	100	125
Unit Data Cooling Only - X			
Nominal Run Amps	A	52.1	55.1
Maximum Start Amps	A	157.2	160.2
Recommended Mains Fuse Size	A	63	63
Max Mains Incoming Cable Size	mm²	50	50
Mains Supply	V	220V / 3PH / 60HZ	
Control Circuit	VAC	24	24
Evaporator Fan - Motor Per Fan			
Electrical Input Power	kW	2.2	2.2
Full Load Amps	A	9.6	9.6
Locked Rotor Amps	A	24	24
Compressor - Per Compressor			
Quantity x Motor Size	kW	2 x 5.16	2 x 5.16
Nominal Run Amps	A	14.9	14.9
Locked Rotor Amps	A	120	120
Type of Start		Direct On Line	
Standard Condenser Match - AC Motor - Per Fan			
Electrical Input Power	kW	0.64	0.64
Full Load Amps	A	3.02	3.02
OPTIONAL EXTRAS			
Electric Heating			
Stage of Reheat		2	2
Number of Elements		6	6
Rating	kW	15	15
Curent per Phase	A	39.36	39.36
Humidifier			
Capacity	kg/hr	3	3
Rating	kW	2.25	2.25
Full Load Amps	A	5.90	5.90
Evaporator Fan Options Larger Fan Motor - AC Motor - Per Fan			
Electrical Input Power	kW	N/A	N/A
Full Load Amps	A	N/A	N/A
Locked Rotor Amps	A	N/A	N/A
Standard Size Motor - EC Motor - Per Fan			
Electrical Input Power	kW	2.63	2.63
Full Load Amps	A	9.8	9.8
Condenser Fan Options Standard Condenser Motor - EC Motor - Per Fan			
Electrical Input Power	kW	0.73	0.73
Full Load Amps	A	3.3	3.3

Mechanical

(1) Entering air 24°C/45% RH ambient 35°C.
(2) Fan Gain / Fan power input based upon fan operating with design airflow at 25Pa ESP, These values may change with different ESP.
(3) With Standard forward curved fan motors; Machine weight includes a refrigerant charge.
(4) Backward curved EC fan options quote electrical power. All other options quote shaft power.
(5) For refrigerant charges, refer to ***Unit Refrigerant Charge (kg/Circuit)***.
(6) Based on air temperature of 15.5°C leaving the evaporator coil.
(7) Based upon low pressure hot water 82°C inlet / 71°C outlet. Air on 20°C. Refer to ***Low Pressure Hot Water***.

Electrical

(1) Values given for full function units (incl. electric heating, humidification and matched condenser) at 7°C evaporating and 54.4°C condensing with standard forward curved fan motors, for optional data, please contact Airedale.
(2) Values given for Cooling only units (incl. Compressor, evaporator fan and matched condenser) at 7°C evaporating and 54.4°C condensing, for optional data, please contact Airedale.
(3) Electrical input power relates to the maximum absorbed electrical power. Actual operating fan power input is shown in the mechanical data tables.

Technical Data Downflow Units X Type V28X - V31X2

Mechanical Data

			V28X-EZRE-2	V31X-EZRE-2	V31X2-EZRE-2
Standard Condenser Match			CR50	CR50	CR50
Capacity					
Nominal Cooling	(1)	kW	27.7	31.7	31.6
Capacity Steps			1	1	2
Dimensions - W x D x H		mm	1460 x 750 x 1940	1460 x 750 x 1940	1460 x 750 x 1940
Weight	(3)	kg	412	412	445
Construction			Panels: Galvanised Sheet Steel, Epoxy Baked		
Material/Colour			Powder Paint - Black, (RAL7021)		
			Frame: Aluminium Frame With Aluminium Corners		
Evaporator			Rifled Copper Tube / Turbulated Hydrophilic Coated Aluminium Fins		
Cooling/Dehum Stages			1/1	1/1	2/1
Evaporator Fan					
Motor - AC Motor			Centrifugal Forward Curved AC - Designed To 25Pa ESP		
Fan Transmission Type			Belt & Pulley		
Quantity			1	1	1
Motor Shaft Power	(4)	kW	3	4	4
Speed @ 25Pa / Maximum ESP		rpm	1420 / 1552	1600 / 1612	1600 / 1612
Maximum ESP		Pa	160	35	35
Nominal Airflow		**m³/s**	2.4	2.8	2.8
Compressor - Scroll			Single	Single	Tandem
Quantity			1	1	2
Oil Charge Volume (Total)		l	3.30	3.30	3.32
Oil Type			Polyol Ester		
Refrigeration	(5)		Single Circuit		
Refrigeration Control & Type			Thermostatic Expansion Valve (Optional EEV) / R410A		
Holding Charge			Inert Gas		
Connections					
Liquid (Sweat)		in	1/2	1/2	1/2
Discharge (Sweat)		in	7/8	7/8	7/8
Filtration			Disposable To ISO16890- ISO-C-75 - 75mm		
Quantity			3	3	3
OPTIONAL EXTRAS					
Larger Condenser Match			CR65	CR65	**CR65**
Nominal Cooling		kW	27.7	32.0	31.9
Hot Gas Reheat	(6)				
Nom Heating (Gross)		kW	12.8	13.7	13.7
Electric Heating (Total)		kW	22.5	22.5	22.5
Humidifier					
Capacity		kg/hr	1.6 - 8.0	1.6 - 8.0	1.6 - 8.0
Feed/Drain			3/4" BSPF Braided Flexible Hose / 19 mm Hose Connection		
Condensate Pump					
Head		m	5	5	5
Flow		l/m	10.8	10.8	10.8
Drain			10mm Stainless Steel Stub Connection		
Evaporator Fan Options:					
Larger Fan Motor - AC Motor			Centrifugal Forward Curved AC - Designed To 25Pa ESP		
Fan Transmission Type			Belt & Pulley		
Quantity	(4)	kW	1	N/A	N/A
Motor Shaft Power		kW	4.0	N/A	N/A
Speed @ Maximum ESP		rpm	1910	N/A	N/A
Maximum ESP		Pa	470.0	N/A	N/A
Optional Fan - EC Motor			Centrifugal Backward Curved EC - Designed to 25Pa ESP		
Fan Transmission Type			Direct Drive		
Quantity			2	2	2
Motor Shaft Power	(4)	kW	N/A	N/A	N/A
Speed @ 25Pa / Maximum ESP		rpm	1700 / 2165	1935 / 2165	1935 / 2165
Maximum ESP		Pa	440	225	225
Low Pressure Hot Water	(7)		Copper Tube / Aluminium Fin		
Capacity Gross		kW	21.7	23.2	23.2
Water Flow (Nominal)		l/s	0.48	0.52	0.52
LPHW Connection Sizes		mm	22	22	22

Technical Data Downflow Units X Type V28X - V31X2

Electrical Data

Standard Condenser Match - X		V28X-EZRE-2 CR50	V31X-EZRE-2 CR50	V31X2-EZRE-2 CR50
Unit Data Full Function - X				
Nominal Run Amps	A	108.2	117.2	116.6
Maximum Start Amps	A	279.7	350.0	221.3
Recommended Mains Fuse Size	A	125	160	125
Unit Data Cooling Only - X				
Nominal Run Amps	A	49.2	58.1	57.6
Maximum Start Amps	A	220.7	291.0	162.3
Recommended Mains Fuse Size	A	63	80	80
Max Mains Incoming Cable Size	mm²	50	95	50
Mains Supply	V		220V / 3PH / 60HZ	
Control Circuit	VAC	24	24	24
Evaporator Fan - Motor Per Fan				
Electrical Input Power	kW	3.5	4.6	4.6
Full Load Amps	A	11.14	14.45	14.45
Locked Rotor Amps	A	77.98	101.15	101.15
Compressor - Per Compressor				
Quantity x Motor Size	kW	1 x 10.79	1 x 12.36	2 x 6.57
Nominal Run Amps	A	31.48	37.12	18.3
Locked Rotor Amps	A	203	270	123
Type of Start			Direct On Line	
Standard Condenser Match - AC Motor - Per Fan				
Electrical Input Power	kW	0.64	0.64	0.64
Full Load Amps	A	3.02	3.02	3.02
OPTIONAL EXTRAS				
Electric Heating				
Stage of Reheat		3	3	3
Number of Elements		9	9	9
Rating	kW	22.5	22.5	22.5
Curent per Phase	A	59.05	59.05	59.05
Humidifier				
Capacity	kg/hr	8	8	8
Rating	kW	6.00	6.00	6.00
Full Load Amps	A	15.75	15.75	15.75
Evaporator Fan Options Larger Fan Motor - AC Motor - Per Fan				
Electrical Input Power	kW	4.6	N/A	N/A
Full Load Amps	A	14.45	N/A	N/A
Locked Rotor Amps	A	101.15	N/A	N/A
Standard Size Motor - EC Motor - Per Fan				
Electrical Input Power	kW	2.63	2.63	2.63
Full Load Amps	A	9.8	9.8	9.8
Condenser Fan Options Standard Condenser Motor - EC Motor - Per Fan				
Electrical Input Power	kW	0.73	0.73	0.73
Full Load Amps	A	3.3	3.3	3.3

Mechanical

(1) Entering air 24°C/45% RH ambient 35°C.
(2) Fan Gain / Fan power input based upon fan operating with design airflow at 25Pa ESP, These values may change with different ESP.
(3) With Standard forward curved fan motors; Machine weight includes a refrigerant charge.
(4) Backward curved EC fan options quote electrical power. All other options quote shaft power.
(5) For refrigerant charges, refer to ***Unit Refrigerant Charge (kg/Circuit)***.
(6) Based on air temperature of 15.5°C leaving the evaporator coil.
(7) Based upon low pressure hot water 82°C inlet / 71°C outlet. Air on 20°C. Refer to ***Low Pressure Hot Water***.

Electrical

(1) Values given for full function units (incl. electric heating, humidification and matched condenser) at 7°C evaporating and 54.4°C condensing with standard forward curved fan motors, for optional data, please contact Airedale.
(2) Values given for Cooling only units (incl. Compressor, evaporator fan and matched condenser) at 7°C evaporating and 54.4°C condensing, for optional data, please contact Airedale.
(3) Electrical input power relates to the maximum absorbed electrical power. Actual operating fan power input is shown in the mechanical data tables.

Technical Data Downflow Units X Type V35X - V35X2

Mechanical Data

			V35X-EZRE-2	V35X2-EZRE-2
Standard Condenser Match			CR50	CR50
Capacity				
Nominal Cooling	(1)	kW	36.5	38.4
Capacity Steps			1	2
Dimensions - W x D x H		mm	1835 x 750 x 1940	1835 x 750 x 1940
Weight	(3)	kg	474	516
Construction			Panels: Galvanised Sheet Steel, Epoxy Baked	
Material/Colour			Powder Paint - Black, (RAL7021)	
			Frame: Aluminium Frame With Aluminium Corners	
Evaporator			Rifled Copper Tube / Turbulated Hydrophilic Coated Aluminium Fins	
Cooling/Dehum Stages			1/1	2/1
Evaporator Fan				
Motor - AC Motor			Centrifugal Forward Curved AC - Designed To 25Pa ESP	
Fan Transmission Type			Belt & Pulley	
Quantity			1	1
Motor Shaft Power	(4)	kW	4	4
Speed @ 25Pa / Maximum ESP		rpm	1440 / 1468	1440 / 1468
Maximum ESP		Pa	35	35
Nominal Airflow		m³/s	3	3
Compressor - Scroll			Single	Tandem
Quantity			1	2
Oil Charge Volume (Total)		l	3.30	3.32
Oil Type			Polyol Ester	
Refrigeration	(5)		Single Circuit	
Refrigeration Control & Type			Thermostatic Expansion Valve (Optional EEV) / R410A	
Holding Charge			Inert Gas	
Connections				
Liquid (Sweat)		in	1/2	1/2
Discharge (Sweat)		in	7/8	7/8
Filtration			Disposable To ISO16890- ISO-C-75 - 75mm	
Quantity			4	4
OPTIONAL EXTRAS				
Larger Condenser Match			CR65	CR65
Nominal Cooling		kW	37.3	39.4
Hot Gas Reheat	(6)			
Nom Heating (Gross)		kW	19.4	19.4
Electric Heating (Total)		kW	30.0	30.0
Humidifier				
Capacity		kg/hr	3.0 - 15.0	3.0 - 15.0
Feed/Drain			3/4” BSPF Braided Flexible Hose / 19 mm Hose Connection	
Condensate Pump				
Head		m	5	5
Flow		l/m	10.8	10.8
Drain			10mm Stainless Steel Stub Connection	
Evaporator Fan Options:				
Larger Fan Motor - AC Motor			Centrifugal Forward Curved AC - Designed To 25Pa ESP	
Fan Transmission Type			Belt & Pulley	
Quantity	(4)	kW	1	1
Motor Shaft Power		kW	5.5	5.5
Speed @ Maximum ESP		rpm	1695	1695
Maximum ESP		Pa	240	240
Optional Fan - EC Motor			Centrifugal Backward Curved EC - Designed to 25Pa ESP	
Fan Transmission Type			Direct Drive	
Quantity			2	2
Motor Shaft Power	(4)	kW	N/A	N/A
Speed @ 25Pa / Maximum ESP		rpm	1935 / 2165	1935 / 2165
Maximum ESP		Pa	260	260
Low Pressure Hot Water	(7)		Copper Tube / Aluminium Fin	
Capacity Gross		kW	29.9	29.9
Water Flow (Nominal)		l/s	0.67	0.67
LPHW Connection Sizes		mm	22	22

Technical Data Downflow Units X Type V35X- V35X2

Electrical Data

Standard Condenser Match - X		V35X-EZRE-2 CR50	V35X2-EZRE-2 CR50
Unit Data Full Function - X			
Nominal Run Amps	A	139.8	143.6
Maximum Start Amps	A	366.7	281.6
Recommended Mains Fuse Size	A	160	160
Unit Data Cooling Only - X			
Nominal Run Amps	A	61.1	64.9
Maximum Start Amps	A	288.0	202.9
Recommended Mains Fuse Size	A	80	80
Max Mains Incoming Cable Size	mm²	185	185
Mains Supply	V	220V / 3PH / 60HZ	
Control Circuit	VAC	24	24
Evaporator Fan - Motor Per Fan			
Electrical Input Power	kW	4.6	4.6
Full Load Amps	A	14.45	14.45
Locked Rotor Amps	A	101.15	101.15
Compressor - Per Compressor			
Quantity x Motor Size	kW	1 x 13.98	2 x 7.82
Nominal Run Amps	A	40.11	21.9
Locked Rotor Amps	A	267	160
Type of Start			
Standard Condenser Match - AC Motor - Per Fan			
Electrical Input Power	kW	0.64	0.64
Full Load Amps	A	3.02	3.02
OPTIONAL EXTRAS			
Electric Heating			
Stage of Reheat		3	3
Number of Elements		12	12
Rating	kW	30	30
Curent per Phase	A	78.73	78.73
Humidifier			
Capacity	kg/hr	15	15
Rating	kW	11.25	11.25
Full Load Amps	A	29.52	29.52
Evaporator Fan Options Larger Fan Motor - AC Motor - Per Fan			
Electrical Input Power	kW	6.3	6.3
Full Load Amps	A	25.63	25.63
Locked Rotor Amps	A	197.35	197.35
Standard Size Motor - EC Motor - Per Fan			
Electrical Input Power	kW	2.63	2.63
Full Load Amps	A	9.8	9.8
Condenser Fan Options Standard Condenser Motor - EC Motor - Per Fan			
Electrical Input Power	kW	0.73	0.73
Full Load Amps	A	3.3	3.3

Mechanical

(1) Entering air 24°C/45% RH ambient 35°C.
(2) Fan Gain / Fan power input based upon fan operating with design airflow at 25Pa ESP, These values may change with different ESP.
(3) With Standard forward curved fan motors; Machine weight includes a refrigerant charge.
(4) Backward curved EC fan options quote electrical power. All other options quote shaft power.
(5) For refrigerant charges, refer to ***Unit Refrigerant Charge (kg/Circuit)***.
(6) Based on air temperature of 15.5°C leaving the evaporator coil.
(7) Based upon low pressure hot water 82°C inlet / 71°C outlet. Air on 20°C. Refer to ***Low Pressure Hot Water***.

Electrical

(1) Values given for full function units (incl. electric heating, humidification and matched condenser) at 7°C evaporating and 54.4°C condensing with standard forward curved fan motors, for optional data, please contact Airedale.
(2) Values given for Cooling only units (incl. Compressor, evaporator fan and matched condenser) at 7°C evaporating and 54.4°C condensing, for optional data, please contact Airedale.
(3) Electrical input power relates to the maximum absorbed electrical power. Actual operating fan power input is shown in the mechanical data tables.

Technical Data Downflow Units X Type V40X - V45X2

Mechanical Data

			V40X-EZRE-2	V40X2-EZRE-2	V45X2-EZRE-2
Standard Condenser Match			CR65	CR65	CR80
Capacity					
Nominal Cooling	(1)	kW	41.8	44.6	51.2
Capacity Steps			1	2	2
Dimensions - W x D x H		mm	1835 x 750 x 1940	1835 x 750 x 1940	1835 x 750 x 1940
Weight	(3)	kg	497	525	531
Construction			Panels: Galvanised Sheet Steel, Epoxy Baked		
Material/Colour			Powder Paint - Black, (RAL7021)		
			Frame: Aluminium Frame With Aluminium Corners		
Evaporator			Rifled Copper Tube / Turbulated Hydrophilic Coated Aluminium Fins		
Cooling/Dehum Stages			1/1	2/1	2/1
Evaporator Fan Motor - AC Motor			Centrifugal Forward Curved AC - Designed To 25Pa ESP		
Fan Transmission Type			Belt & Pulley		
Quantity			1	1	1
Motor Shaft Power	(4)	kW	5.5	5.5	5.5
Speed @ 25Pa / Maximum ESP		rpm	1620 / 1622	1620 / 1622	1620 / 1622
Maximum ESP		Pa	25	25	25
Nominal Airflow		m^3/s	3.7	3.7	3.7
Compressor - Scroll			Single	Tandem	
Quantity			1	2	2
Oil Charge Volume (Total)		l	3.30	3.78	3.44
Oil Type			Polyol Ester		
Refrigeration	(5)		Single Circuit		
Refrigeration Control & Type			Thermostatic Expansion Valve (Optional EEV) / R410A		
Holding Charge			Inert Gas		
Connections					
Liquid (Sweat)		in	5/8	5/8	5/8
Discharge (Sweat)		in	1 1/8	7/8	7/8
Filtration			Disposable To ISO16890- ISO-C-75 - 75mm		
Quantity			4	4	4
OPTIONAL EXTRAS					
Larger Condenser Match			CR80	CR80	CR105
Nominal Cooling		kW	42.2	45.2	51.6
Hot Gas Reheat	(6)				
Nom Heating (Gross)		kW	20.3	20.3	20.3
Electric Heating (Total)		kW	30.0	30.0	30
Humidifier					
Capacity		kg/hr	3.0 - 15.0	3.0 - 15.0	3.0 - 15.0
Feed/Drain			3/4" BSPF Braided Flexible Hose / 19 mm Hose Connection		
Condensate Pump					
Head		m	5	5	5
Flow		l/m	10.8	10.8	10.8
Drain			10mm Stainless Steel Stub Connection		
Evaporator Fan Options:					
Larger Fan Motor - AC Motor			Centrifugal Forward Curved AC - Designed To 25Pa ESP		
Fan Transmission Type			Belt & Pulley		
Quantity	(4)	kW	N/A	N/A	N/A
Motor Shaft Power		kW	N/A	N/A	N/A
Speed @ Maximum ESP		rpm	N/A	N/A	N/A
Maximum ESP		Pa	N/A	N/A	N/A
Optional Fan - EC Motor			Centrifugal Backward Curved EC - Designed to 25Pa ESP		
Fan Transmission Type			Direct Drive		
Quantity			2	2	2
Motor Shaft Power	(4)	kW	N/A	N/A	N/A
Speed @ 25Pa / Maximum ESP		rpm	2165 / 2165	2165 / 2165	2165 / 2165
Maximum ESP		Pa	25	25	25
Low Pressure Hot Water	(7)		Copper Tube / Aluminium Fin		
Capacity Gross		kW	31.5	31.5	31.5
Water Flow (Nominal)		l/s	0.70	0.70	0.70
LPHW Connection Sizes		mm	22	22	22

Technical Data Downflow Units X Type V40X - V45X2

Electrical Data

Standard Condenser Match - X		V40X-EZRE-2 CR65	V40X2-EZRE-2 CR65	V45X2-EZRE-2 CR80
Unit Data Full Function - X				
Nominal Run Amps	A	152.4	151.4	162.0
Maximum Start Amps	A	409.7	318.6	325.4
Recommended Mains Fuse Size	A	200	160	200
Unit Data Cooling Only - X				
Nominal Run Amps	A	73.7	72.7	83.2
Maximum Start Amps	A	331.0	239.9	246.6
Recommended Mains Fuse Size	A	100	100	100
Max Mains Incoming Cable Size	mm²	185	185	185
Mains Supply	V		220V / 3PH / 60HZ	
Control Circuit	VAC	24	24	24
Evaporator Fan - Motor Per Fan				
Electrical Input Power	kW	5.5	5.5	5.5
Full Load Amps	A	20.46	20.46	20.46
Locked Rotor Amps	A	157.5	157.5	157.5
Compressor - Per Compressor				
Quantity x Motor Size	kW	1 x 16.07	2 x 8.26	2 x 9.19
Nominal Run Amps	A	46.72	22.9	26.6
Locked Rotor Amps	A	304	190	190
Type of Start				
Standard Condenser Match - AC Motor - Per Fan				
Electrical Input Power	kW	0.64	0.64	0.64
Full Load Amps	A	3.02	3.02	3.02
OPTIONAL EXTRAS				
Electric Heating				
Stage of Reheat		3	3	3
Number of Elements		12	12	12
Rating	kW	30	30	30
Curent per Phase	A	78.73	78.73	78.73
Humidifier				
Capacity	kg/hr	15	15	15
Rating	kW	11.25	11.25	11.25
Full Load Amps	A	29.52	29.52	29.52
Evaporator Fan Options Larger Fan Motor - AC Motor - Per Fan				
Electrical Input Power	kW	N/A	N/A	N/A
Full Load Amps	A	N/A	N/A	N/A
Locked Rotor Amps	A	N/A	N/A	N/A
Standard Size Motor - EC Motor - Per Fan				
Electrical Input Power	kW	2.63	2.63	2.63
Full Load Amps	A	9.8	9.8	9.8
Condenser Fan Options Standard Condenser Motor - EC Motor - Per Fan				
Electrical Input Power	kW	0.73	0.73	0.73
Full Load Amps	A	3.3	3.3	3.3

Mechanical

(1) Entering air 24°C/45% RH ambient 35°C.
(2) Fan Gain / Fan power input based upon fan operating with design airflow at 25Pa ESP, These values may change with different ESP.
(3) With Standard forward curved fan motors; Machine weight includes a refrigerant charge.
(4) Backward curved EC fan options quote electrical power. All other options quote shaft power.
(5) For refrigerant charges, refer to ***Unit Refrigerant Charge (kg/Circuit)***.
(6) Based on air temperature of 15.5°C leaving the evaporator coil.
(7) Based upon low pressure hot water 82°C inlet / 71°C outlet. Air on 20°C. Refer to ***Low Pressure Hot Water***.

Electrical

(1) standard Values given for full function units (incl. electric heating, humidification and matched condenser) at 7°C evaporating and 54.4°C condensing with forward curved fan motors, for optional data, please contact Airedale.
(2) Values given for Cooling only units (incl. Compressor, evaporator fan and matched condenser) at 7°C evaporating and 54.4°C condensing, for optional data, please contact Airedale.
(3) Electrical input power relates to the maximum absorbed electrical power. Actual operating fan power input is shown in the mechanical data tables.

Technical Data Downflow Units X Type V50X2 - V60X2

Mechanical Data

			V50X2-EZRE-2	V55X2-EZRE-2	V60X2-EZRE-2
Standard Condenser Match			CR80	CR80	CR80
Capacity					
Nominal Cooling	(1)	kW	53.0	60.1	67.1
Capacity Steps			2	2	2
Dimensions - W x D x H		mm	2170 x 750 x 1940	2170 x 750 x 1940	2170 x 750 x 1940
Weight	(3)	kg	619	636	640
Construction			Panels: Galvanised Sheet Steel, Epoxy Baked		
Material/Colour			Powder Paint - Black, (RAL7021)		
			Frame: Aluminium Frame With Aluminium Corners		
Evaporator			Rifled Copper Tube / Turbulated Hydrophilic Coated Aluminium Fins		
Cooling/Dehum Stages			2/1	2/1	2/1
Evaporator Fan					
Motor - AC Motor			Centrifugal Forward Curved AC - Designed To 25Pa ESP		
Fan Transmission Type			Belt & Pulley		
Quantity			2	2	2
Motor Shaft Power	(4)	kW	3.0	3.0	3.0
Speed @ 25Pa / Maximum ESP		rpm	1243 / 1447	1243 / 1447	1278 / 1324
Maximum ESP		Pa	255	255	35
Nominal Airflow		m³/s	4.20	4.20	4.60
Compressor - Scroll			Tandem		
Quantity			2	2	2
Oil Charge Volume (Total)		l	6.60	6.60	6.60
Oil Type			Polyol Ester		
Refrigeration	(5)		Single Circuit		
Refrigeration Control & Type			Thermostatic Expansion Valve (Optional EEV) / R410A		
Holding Charge			Inert Gas		
Connections					
Liquid (Sweat)		in	5/8	5/8	5/8
Discharge (Sweat)		in	1 3/8	1 3/8	1 3/8
Filtration			Disposable To ISO16890- ISO-C-75 - 75mm		
Quantity			5	5	5
OPTIONAL EXTRAS					
Larger Condenser Match			CR105	CR105	CR105
Nominal Cooling		kW	53.6	61.2	68.6
Hot Gas Reheat	(6)				
Nom Heating (Gross)		kW	25.7	25.7	26.7
Electric Heating (Total)		kW	30.0	30.0	30
Humidifier					
Capacity		kg/hr	3.0 - 15.0	3.0 - 15.0	3.0 - 15.0
Feed/Drain			3/4" BSPF Braided Flexible Hose / 19 mm Hose Connection		
Condensate Pump					
Head		m	5	5	5
Flow		l/m	10.8	10.8	10.8
Drain			10mm Stainless Steel Stub Connection		
Evaporator Fan Options:					
Larger Fan Motor - AC Motor			Centrifugal Forward Curved AC - Designed To 25Pa ESP		
Fan Transmission Type			Belt & Pulley		
Quantity	(4)	kW	2	2	2
Motor Shaft Power		kW	4.0	4.0	4.0
Speed @ Maximum ESP		rpm	1495	1495	1499
Maximum ESP		Pa	305	305	230
Optional Fan - EC Motor			Centrifugal Backward Curved EC - Designed to 25Pa ESP		
Fan Transmission Type			Direct Drive		
Quantity			2	2	2
Motor Shaft Power	(4)	kW	N/A	N/A	N/A
Speed @ 25Pa / Maximum ESP		rpm	1370 / 1510	1370 / 1510	1510 / 1510
Maximum ESP		Pa	165	165	25
Low Pressure Hot Water	(7)		Copper Tube / Aluminium Fin		
Capacity Gross		kW	37.7	37.7	39.2
Water Flow (Nominal)		l/s	0.84	0.84	0.87
LPHW Connection Sizes		mm	22	22	22

Technical Data Downflow Units X Type V50X2 - V60X2

Electrical Data

Standard Condenser Match - X		V50X2-EZRE-2 CR80	V55X2-EZRE-2 CR80	V60X2-EZRE-2 CR80
Unit Data Full Function - X				
Nominal Run Amps	A	173.5	184.8	190.8
Maximum Start Amps	A	345.0	417.7	417.7
Recommended Mains Fuse Size	A	200	200	250
Unit Data Cooling Only - X				
Nominal Run Amps	A	94.8	106.1	112.1
Maximum Start Amps	A	266.3	339.0	339.0
Recommended Mains Fuse Size	A	125	125	125
Max Mains Incoming Cable Size	mm²	185	185	185
Mains Supply	V		220V / 3PH / 60HZ	
Control Circuit	VAC	24	24	24
Evaporator Fan - Motor Per Fan				
Electrical Input Power	kW	3.5	3.5	3.5
Full Load Amps	A	11.14	11.14	11.14
Locked Rotor Amps	A	77.98	77.98	77.98
Compressor - Per Compressor				
Quantity x Motor Size	kW	2 x 10.79	2 x 12.36	2 x 13.98
Nominal Run Amps	A	31.48	37.12	40.11
Locked Rotor Amps	A	203	270	267
Type of Start				
Standard Condenser Match - AC Motor - Per Fan				
Electrical Input Power	kW	0.64	0.64	0.64
Full Load Amps	A	3.02	3.02	3.02
OPTIONAL EXTRAS				
Electric Heating				
Stage of Reheat		3	3	3
Number of Elements		12	12	12
Rating	kW	30	30	30
Curent per Phase	A	78.73	78.73	78.73
Humidifier				
Capacity	kg/hr	15	15	15
Rating	kW	11.25	11.25	11.25
Full Load Amps	A	29.52	29.52	29.52
Evaporator Fan Options Larger Fan Motor - AC Motor - Per Fan				
Electrical Input Power	kW	4.6	4.6	4.6
Full Load Amps	A	14.45	14.45	14.45
Locked Rotor Amps	A	101.15	101.15	101.15
Standard Size Motor - EC Motor - Per Fan				
Electrical Input Power	kW	2.9	2.9	2.9
Full Load Amps	A	9.2	9.2	9.2
Condenser Fan Options Standard Condenser Motor - EC Motor - Per Fan				
Electrical Input Power	kW	0.73	0.73	0.73
Full Load Amps	A	3.3	3.3	3.3

Mechanical

(1) Entering air 24°C/45% RH ambient 35°C.
(2) Fan Gain / Fan power input based upon fan operating with design airflow at 25Pa ESP, These values may change with different ESP.
(3) With Standard forward curved fan motors; Machine weight includes a refrigerant charge.
(4) Backward curved EC fan options quote electrical power. All other options quote shaft power.
(5) For refrigerant charges, refer to ***Unit Refrigerant Charge (kg/Circuit)***.
(6) Based on air temperature of 15.5°C leaving the evaporator coil.
(7) Based upon low pressure hot water 82°C inlet / 71°C outlet. Air on 20°C. Refer to ***Low Pressure Hot Water***.

Electrical

(1) Values given for full function units (incl. electric heating, humidification and matched condenser) at 7°C evaporating and 54.4°C condensing with standard forward curved fan motors, for optional data, please contact Airedale.
(2) Values given for Cooling only units (incl. Compressor, evaporator fan and matched condenser) at 7°C evaporating and 54.4°C condensing, for optional data, please contact Airedale.
(3) Electrical input power relates to the maximum absorbed electrical power. Actual operating fan power input is shown in the mechanical data tables.

Technical Data Downflow Units WX Type - 2

Performance Data

Cooling Capacity (1)		Condenser Entering/Leaving Temperature - Based on 5°C ΔT											
	Air On	25°C/30°C			30°C/35°C			35°C/40°C			40°C/45°C		
	(DB°C/%RH)	TC (kW)	SC (kW)	THR (kW)	TC (kW)	SC (kW)	THR (kW)	TC (kW)	SC (kW)	THR (kW)	TC (kW)	SC (kW)	THR (kW)
DF8WX-EZRE-2	22/50	9.3	8.8	12.5	9.3	8.8	12.5	9.2	8.7	12.4	8.8	8.4	12.3
	24/45	9.6	9.3	12.8	9.6	9.3	12.8	9.5	9.2	12.7	9.1	8.9	12.6
	26/40	9.9	9.9	13.1	9.9	9.9	13.1	9.8	9.8	13.0	9.4	9.4	12.9
DF10WX-EZRE-2	22/50	10.3	10.3	13.8	10.3	10.3	13.8	10.1	10.1	13.7	9.5	9.5	13.5
	24/45	10.6	10.6	14.1	10.6	10.6	14.1	10.4	10.4	14.0	9.9	9.9	13.8
	26/40	11.0	11.0	14.5	11.0	11.0	14.5	10.8	10.8	14.4	10.2	10.2	14.2
DF13WX-EZRE-2	22/50	13.4	12.2	17.7	13.4	12.2	17.7	13.1	12.0	17.6	12.4	11.7	17.4
	24/45	13.8	13.2	18.2	13.8	13.2	18.2	13.5	13.0	18.0	12.9	12.6	17.9
	26/40	14.2	14.0	18.6	14.2	14.0	18.6	13.9	13.8	18.5	13.3	13.3	18.3
DF15WX-EZRE-2	22/50	16.1	14.9	21.4	16.1	14.9	21.4	15.9	14.8	21.3	15.1	14.3	21.0
	24/45	16.7	15.8	21.9	16.7	15.8	21.9	16.4	15.6	21.8	15.6	15.1	21.6
	26/40	17.1	16.9	22.4	17.1	16.9	22.4	16.9	16.7	22.3	16.1	16.1	22.1
DF17WX-EZRE-2	22/50	19.4	17.0	25.9	19.4	17.0	25.9	19.0	16.8	25.8	18.1	16.3	25.4
	24/45	19.9	18.1	26.5	19.9	18.1	26.5	19.6	17.9	26.3	18.7	17.4	26.0
	26/40	20.4	19.5	27.0	20.4	19.5	27.0	20.1	19.3	26.9	19.2	18.7	26.5
DF20WX2-EZRE-2	22/50	24.1	21.5	32.3	24.1	21.5	32.3	23.6	21.3	32.1	22.5	20.6	31.8
	24/45	24.8	23.2	33.1	24.8	23.2	33.1	24.3	22.9	32.9	23.2	22.2	32.5
	26/40	25.5	24.7	33.8	25.5	24.7	33.8	25.0	24.4	33.6	23.9	23.6	33.3
DF22WX2-EZRE-2	22/50	24.8	23.2	33.0	24.8	23.2	33.0	24.3	22.9	32.8	23.1	22.1	32.4
	24/45	25.6	24.8	33.8	25.6	24.8	33.8	25.1	24.5	33.6	23.9	23.7	33.3
	26/40	26.4	26.4	34.6	26.4	26.4	34.6	25.9	25.9	34.4	24.7	24.7	34.1

Technical Data Downflow Units WX Type - 2

Performance Data

Cooling Capacity (1)		Condenser Entering/Leaving Temperature - Based on 5°C ΔT											
	Air On	25°C/30°C			30°C/35°C			35°C/40°C			40°C/45°C		
	(DB°C/%RH)	TC (kW)	SC (kW)	THR (kW)	TC (kW)	SC (kW)	THR (kW)	TC (kW)	SC (kW)	THR (kW)	TC (kW)	SC (kW)	THR (kW)
DF28WX-EZRE-2	22/50	26.2	26.2	35.1	26.2	26.2	35.1	25.8	25.8	35.0	24.6	24.6	34.5
	24/45	27.2	27.2	36.2	27.2	27.2	36.2	26.8	26.8	36.1	25.6	25.6	35.5
	26/40	28.2	28.2	37.3	28.2	28.2	37.3	27.9	27.9	37.2	26.7	26.7	36.7
DF31WX-EZRE-2	22/50	30.3	30.3	40.9	30.3	30.3	40.9	29.9	29.9	40.7	28.5	28.5	40.1
	24/45	31.5	31.5	42.1	31.5	31.5	42.1	31.1	31.1	41.9	29.7	29.7	41.4
	26/40	32.7	32.7	43.4	32.7	32.7	43.4	32.3	32.3	43.2	30.9	30.9	42.7
DF35WX-EZRE-2	22/50	35.4	35.4	47.4	35.4	35.4	47.4	34.9	34.9	47.1	33.2	33.2	46.3
	24/45	36.7	36.7	48.8	36.7	36.7	48.8	36.2	36.2	48.6	34.5	34.5	47.8
	26/40	38.1	38.1	50.4	38.1	38.1	50.4	37.6	37.6	50.1	36.0	36.0	49.4
DF40WX-EZRE-2	22/50	40.0	40.0	53.7	40.0	40.0	53.7	39.4	39.4	53.4	37.5	37.5	52.6
	24/45	41.5	41.5	55.3	41.5	41.5	55.3	40.8	40.8	55.0	39.0	39.0	54.2
	26/40	43.0	43.0	56.9	43.0	43.0	56.9	42.3	42.3	56.7	40.6	40.6	56.0
DF45WX-EZRE-2	22/50	44.8	43.7	60.0	44.8	43.7	60.0	44.1	43.2	59.6	41.9	41.8	58.7
	24/45	46.3	46.3	61.6	46.3	46.3	61.6	45.6	45.6	61.3	43.5	43.5	60.3
	26/40	47.9	47.9	63.3	47.9	47.9	63.3	47.2	47.2	63.0	45.1	45.1	62.0
DF50WX2-EZRE-2	22/50	50.9	49.4	68.7	50.9	49.4	68.7	50.1	48.8	68.3	47.6	47.2	67.4
	24/45	52.7	52.7	70.7	52.7	52.7	70.7	51.9	51.9	70.3	49.4	49.4	69.3
	26/40	54.5	54.5	72.6	54.5	54.5	72.6	53.7	53.7	72.2	51.2	51.2	71.3
DF55WX2-EZRE-2	22/50	58.6	53.9	79.6	58.6	53.9	79.6	57.6	53.3	79.2	55.0	51.7	78.1
	24/45	60.6	58.0	81.7	60.6	58.0	81.7	59.5	57.3	81.3	56.9	55.7	80.2
	26/40	62.4	62.2	83.7	62.4	62.2	83.7	61.3	61.3	83.2	58.6	58.6	82.1
DF60WX2-EZRE-2	22/50	66.5	60.2	90.1	66.5	60.2	90.1	65.2	59.5	89.5	62.0	57.7	88.2
	24/45	68.6	64.6	92.4	68.6	64.6	92.4	67.3	63.9	91.8	64.1	61.9	90.5
	26/40	70.6	69.2	94.6	70.6	69.2	94.6	69.3	68.4	94.0	66.1	66.1	92.6

Technical Data Downflow Units WX Type - 2

Noise Data

	Sound Measurement		Overall dB(A)	Frequency (Hz) dB 63	125	250	500	1000	2000	4000	8000
DF8WX	Discharge Air	Power	77	70	74	73	72	72	71	64	59
	Return Air	Power	68	73	74	72	65	59	56	54	44
	Case Breakout	Power	63	70	71	63	60	56	53	50	43
	Sound @ 3m	Pressure	48	55	57	49	45	42	38	36	29
DF10WX	Discharge Air	Power	80	73	77	76	75	75	74	67	62
	Return Air	Power	71	76	77	75	68	62	59	57	47
	Case Breakout	Power	66	73	74	66	63	59	55	53	47
	Sound @ 3m	Pressure	51	58	60	52	48	45	41	38	32
DF13WX	Discharge Air	Power	77	71	74	72	72	72	71	64	59
	Return Air	Power	67	73	74	72	65	59	56	54	44
	Case Breakout	Power	63	70	71	63	60	56	52	50	44
	Sound @ 3m	Pressure	48	56	57	49	45	42	38	36	30
DF15WX	Discharge Air	Power	73	70	75	72	69	68	67	62	57
	Return Air	Power	66	73	74	71	62	55	52	53	42
	Case Breakout	Power	62	70	72	63	57	54	49	51	44
	Sound @ 3m	Pressure	47	55	57	49	43	39	34	36	29
DF17WX	Discharge Air	Power	77	74	78	76	73	72	70	66	61
	Return Air	Power	70	77	78	75	66	59	55	56	46
	Case Breakout	Power	65	73	76	67	61	57	52	53	46
	Sound @ 3m	Pressure	50	59	61	52	46	43	38	39	31
DF20WX2	Discharge Air	Power	81	74	78	77	76	77	75	68	63
	Return Air	Power	72	77	78	76	69	63	60	59	48
	Case Breakout	Power	67	74	76	68	64	61	56	54	48
	Sound @ 3m	Pressure	52	59	61	53	49	46	42	40	34
DF22WX2	Discharge Air	Power	85	79	83	81	80	81	79	72	67
	Return Air	Power	76	81	82	80	73	67	64	63	52
	Case Breakout	Power	71	78	80	72	68	65	60	58	52
	Sound @ 3m	Pressure	56	64	65	57	54	50	46	43	37
DF28WX	Discharge Air	Power	87	77	80	79	81	81	82	79	76
	Return Air	Power	68	77	71	63	66	63	58	56	47
	Case Breakout	Power	70	80	70	63	67	67	60	57	48
	Sound @ 3m	Pressure	55	65	56	49	53	52	45	42	34

(1) dB(A) is the overall sound level, measured on the A scale
(2) All sound data measured at nominal conditions, Discharge Air, Return air and case breakout is sound power.

Technical Data Downflow Units WX Type - 2

Noise Data

	Sound Measurement		Overall dB(A)	Frequency (Hz) dB 63	125	250	500	1000	2000	4000	8000
DF31WX	Discharge Air	Power	91	78	84	83	85	84	85	83	80
	Return Air	Power	71	77	75	66	69	66	61	60	52
	Case Breakout	Power	73	80	74	67	70	69	63	60	52
	Sound @ 3m	Pressure	58	66	59	52	55	55	48	46	38
DF35WX	Discharge Air	Power	90	77	83	82	87	83	84	82	79
	Return Air	Power	71	76	74	65	71	65	60	59	51
	Case Breakout	Power	72	78	73	66	71	68	61	60	51
	Sound @ 3m	Pressure	58	65	58	51	57	53	47	45	37
DF40WX	Discharge Air	Power	92	80	86	85	89	86	86	85	81
	Return Air	Power	73	78	76	67	73	67	62	62	53
	Case Breakout	Power	75	80	75	68	74	70	64	62	54
	Sound @ 3m	Pressure	60	65	61	54	59	56	49	48	40
DF45WX	Discharge Air	Power	92	80	86	85	89	86	86	85	81
	Return Air	Power	73	78	76	67	73	67	62	62	54
	Case Breakout	Power	75	80	75	68	74	70	64	62	54
	Sound @ 3m	Pressure	60	65	61	54	59	56	49	48	40
DF50WX2	Discharge Air	Power	89	78	84	86	82	83	84	81	76
	Return Air	Power	69	76	75	69	66	64	59	58	48
	Case Breakout	Power	71	79	74	69	67	68	61	58	49
	Sound @ 3m	Pressure	56	64	59	55	52	53	47	43	34
DF55WX2	Discharge Air	Power	89	78	84	86	82	83	84	81	76
	Return Air	Power	70	77	75	69	67	64	60	58	48
	Case Breakout	Power	71	79	74	69	68	68	62	58	49
	Sound @ 3m	Pressure	57	64	59	55	53	53	47	44	35
DF60WX2	Discharge Air	Power	91	80	85	89	84	85	86	83	79
	Return Air	Power	71	79	76	72	69	66	62	60	51
	Case Breakout	Power	73	81	75	73	69	69	63	60	52
	Sound @ 3m	Pressure	58	66	60	58	55	54	49	46	37

(1) dB(A) is the overall sound level, measured on the A scale
(2) All sound data measured at nominal conditions, Discharge Air, Return air and case breakout is sound power.

Technical Data Downflow Units WX Type DF8WX - DF10WX

Mechanical Data

			DF8WX-EZRE-2	DF10WX-EZRE-2
Capacity	(1)			
Nominal Cooling		kW	9.6	10.6
Total Heat of Rejection		kW	12.8	14.1
Capacity Steps			1	1
Dimensions - W x D x H		mm	670 x 670 x 1940	670 x 670 x 1940
Weight	(3)	kg	218 / 219	240 / 241
Construction			Panels: Galvanised Sheet Steel, Epoxy Baked	
Material/Colour			Powder Paint - Black, (RAL7021)	
			Frame: Aluminium Frame With Aluminium Corners	
Evaporator			Rifled Copper Tube / Turbulated Hydrophilic Coated Aluminium Fins	
Cooling/Dehum Stages			1/1	1/1
Condenser			Stainless Steel Brazed Plate	
Water Volume		l	1.4	1.4
Evaporator Fan				
Motor - AC Motor			Centrifugal Forward Curved AC - Designed To 25Pa ESP	
Fan Transmission Type			Direct Drive	
Quantity			1	1
Motor Shaft Power	(4)	kW	N/A	N/A
Maximum ESP		Pa	140	118
Nominal Airflow		m³/s	0.75	0.95
Compressor - Scroll			Single	
Quantity			1	1
Oil Charge Volume (Total)		l	0.70	1.20
Oil Type			Polyol Ester	
Connections				
Water Inlet / Outlet		mm	22	22
Condensate Drain Hose		mm	19	19
Filtration			Disposable To ISO16890-ISO-C-75 - 50mm	
Quantity			1	1
OPTIONAL EXTRAS				
Electric Heating (Total)		kW	7.5	7.5
Humidifier				
Capacity		kg/hr	0.6 - 3.0	0.6 - 3.0
Feed/Drain			3/4" BSPF Braided Flexible Hose / 19mm Hose Connection	
Condensate Pump				
Head		m	8	8
Flow		l/m	5	5
Drain			10mm Stainless Steel Stub Connection	
Optional Fan - EC Motor			Centrifugal Backward Curved EC - Designed To 25Pa ESP	
Fan Transmission Type			Direct Drive	
Quantity			1	1
Motor Shaft Power	(4)	kW	N/A	N/A
Speed @ 25Pa / Maximum ESP		rpm	1705 / 2215	2145 / 2215
Maximum ESP		Pa	295	50
Low Pressure Hot Water	(7)		Copper Tube / Aluminium Fin	
Capacity Gross		kW	7.5	8.4
Water Flow (Nominal)		l/s	0.17	0.19
LPHW Connection Sizes		mm	22	22
Threaded Connection				
Brass Male Taper		in	3/4	3/4

Technical Data Downflow Units WX Type DF8WX - DF10WX

Electrical Data

		DF8WX-EZRE-2	DF10WX-EZRE-2
Unit Data Full Function - WX			
Nominal Run Amps	A	39.2	41.6
Maximum Start Amps	A	123.2	124.3
Recommended Mains Fuse Size	A	50	50
Unit Data Cooling Only - WX			
Nominal Run Amps	A	19.5	21.9
Maximum Start Amps	A	103.5	104.6
Recommended Mains Fuse Size	A	25	32
Max Mains Incoming Cable Size	mm²	35	35
Mains Supply	V	220V / 3PH / 60HZ	
Control Circuit	VAC	24	24
Evaporator Fan - Motor Per Fan			
Electrical Input Power	kW	1.6	2.2
Full Load Amps	A	8.5	9.6
Locked Rotor Amps	A	21.2	24
Compressor - Per Compressor			
Quantity x Motor Size	kW	1 x 3.95	1 x 4.43
Nominal Run Amps	A	11.0	12.3
Locked Rotor Amps	A	95	95
Type of Start			
Standard Condenser Match - AC Motor - Per Fan			
Electrical Input Power	kW	0.39	0.39
Full Load Amps	A	1.72	1.72
OPTIONAL EXTRAS			
Electric Heating			
Stage of Reheat		1	1
Number of Elements		3	3
Rating	kW	7.5	7.5
Curent per Phase	A	19.68	19.68
Humidifier			
Capacity	kg/hr	3	3
Rating	kW	2.25	2.25
Full Load Amps	A	5.90	5.90
Evaporator Fan Options Larger Fan Motor - AC Motor - Per Fan			
Electrical Input Power	kW	2.2	N/A
Full Load Amps	A	9.1	N/A
Locked Rotor Amps	A	22.75	N/A
Standard Size Motor - EC Motor - Per Fan			
Electrical Input Power	kW	0.94	0.94
Full Load Amps	A	3	3
Condenser Fan Options Standard Condenser Motor - EC Motor - Per Fan			
Electrical Input Power	kW	0.7	0.7
Full Load Amps	A	3.1	3.1

Mechanical

(1) Entering air 24°C/45% RH condenser water in / out: 30°C/35°C.
(2) Fan Gain / Fan power input based upon fan operating with design airflow at 25Pa ESP, These values may change with different ESP.
(3) With Standard forward curved fan motors; Machine weight includes a refrigerant charge /Operating weight includes calculated water volume.
(4) Backward curved EC fan options quote electrical power. All other options quote shaft power.
(5) For refrigerant charges, refer to ***Unit Refrigerant Charge (kg/Circuit)***.
(6) Based on air temperature of 15.5°C leaving the evaporator coil.
(7) Based upon low pressure hot water 82°C inlet / 71°C outlet. Air on 20°C. Refer to ***Low Pressure Hot Water (Optional Extra) - X & WX Models***.

Electrical

(1) Values given for full function units (incl. electric heating, humidification and matched condenser) at 7°C evaporating and 54.4°C condensing with standard forward curved fan motors, for optional data, please contact Airedale.
(2) Values given for Cooling only units (incl. Compressor, evaporator fan and matched condenser) at 7°C evaporating and 54.4°C condensing, for optional data, please contact Airedale.
(3) Electrical input power relates to the maximum absorbed electrical power. Actual operating fan power input is shown in the mechanical data tables.

Technical Data Downflow Units WX Type DF13WX - DF17WX

Mechanical Data

			DF13WX-EZRE-2	DF15WX-EZRE-2	DF17WX-EZRE-2
Capacity	(1)				
Nominal Cooling		kW	13.8	16.7	19.9
Total Heat of Rejection		kW	18.2	21.9	26.5
Capacity Steps			1	1	1
Dimensions - W x D x H		mm	990 x 670 x 1940	990 x 670 x 1940	990 x 670 x 1940
Weight	(3)	kg	271 / 273	273 / 275	275 / 277
Construction			Panels: Galvanised Sheet Steel, Epoxy Baked		
Material/Colour			Powder Paint - Black, (RAL7021)		
			Frame: Aluminium Frame With Aluminium Corners		
Evaporator			Rifled Copper Tube / Turbulated Hydrophilic Coated Aluminium Fins		
Cooling/Dehum Stages			1/1	1/1	1/1
Condenser			Stainless Steel Brazed Plate		
Water Volume		l	1.4	2.0	2.5
Evaporator Fan					
Motor - AC Motor			Centrifugal Forward Curved AC - Designed To 25Pa ESP		
Fan Transmission Type			Direct Drive		
Quantity			1	1	1
Motor Shaft Power	(4)	kW	N/A	N/A	N/A
Maximum ESP		Pa	294	120	34
Nominal Airflow		m^3/s	1.00	1.20	1.40
Compressor - Scroll					
Quantity			1	1	1
Oil Charge Volume (Total)		l	1.20	1.66	1.89
Oil Type					
Connections					
Water Inlet / Outlet		mm	22	22	28
Condensate Drain Hose		mm	19	19	19
Filtration			Disposable To ISO16890-ISO-C-75 - 50mm		
Quantity			2	2	2
OPTIONAL EXTRAS					
Electric Heating (Total)		kW	7.5	7.5	7.5
Humidifier					
Capacity		kg/hr	0.6 - 3.0	0.6 - 3.0	0.6 - 3.0
Feed/Drain			3/4" BSPF Braided Flexible Hose / 19mm Hose Connection		
Condensate Pump					
Head		m	8	8	8
Flow		l/m	5	5	5
Drain			10mm Stainless Steel Stub Connection		
Optional Fan - EC Motor			Centrifugal Backward Curved EC - Designed To 25Pa ESP		
Fan Transmission Type			Direct Drive		
Quantity			1	1	1
Motor Shaft Power	(4)	kW	N/A	N/A	N/A
Speed @ 25Pa / Maximum ESP		rpm	1105 / 1560	1310 / 1560	1515 / 1560
Maximum ESP		Pa	310	195	45
Low Pressure Hot Water	(7)		Copper Tube / Aluminium Fin		
Capacity Gross		kW	11.5	12.5	13.3
Water Flow (Nominal)		l/s	0.26	0.28	0.30
LPHW Connection Sizes		mm	22	22	22
Threaded Connection					
Brass Male Taper		in	3/4	3/4	1

Technical Data Downflow Units WX Type DF13WX - DF17WX

Electrical Data

		V13WX-EZRE-2	V15WX-EZRE-2	V17WX-EZRE-2
Unit Data Full Function - WX				
Nominal Run Amps	A	44.8	45.8	49.4
Maximum Start Amps	A	149.3	150.5	187.5
Recommended Mains Fuse Size	A	50	63	63
Unit Data Cooling Only - WX				
Nominal Run Amps	A	25.2	26.1	29.7
Maximum Start Amps	A	129.6	130.8	167.8
Recommended Mains Fuse Size	A	32	32	40
Max Mains Incoming Cable Size	mm²	35	35	35
Mains Supply	V		220V / 3PH / 60HZ	
Control Circuit	VAC	24	24	24
Evaporator Fan - Motor Per Fan				
Electrical Input Power	kW	2.2	1.9	1.9
Full Load Amps	A	9.6	7.8	7.8
Locked Rotor Amps	A	24	19.5	19.5
Compressor - Per Compressor				
Quantity x Motor Size	kW	1 x 5,53	1 x 6.57	1 x 7.82
Nominal Run Amps	A	15.6	18.3	21.9
Locked Rotor Amps	A	120	123	160
Type of Start				
Standard Condenser Match - AC Motor - Per Fan				
Electrical Input Power	kW	0.64	0.64	0.64
Full Load Amps	A	3.02	3.02	3.02
OPTIONAL EXTRAS				
Electric Heating				
Stage of Reheat		1	1	1
Number of Elements		3	3	3
Rating	kW	7.5	7.5	7.5
Curent per Phase	A	19.68	19.68	19.68
Humidifier				
Capacity	kg/hr	3	3	3
Rating	kW	2.25	2.25	2.25
Full Load Amps	A	5.90	5.90	5.90
Evaporator Fan Options Larger Fan Motor - AC Motor - Per Fan				
Electrical Input Power	kW	N/A	N/A	N/A
Full Load Amps	A	N/A	N/A	N/A
Locked Rotor Amps	A	N/A	N/A	N/A
Standard Size Motor - EC Motor - Per Fan				
Electrical Input Power	kW	1.01	1.01	1.01
Full Load Amps	A	3.2	3.2	3.2
Condenser Fan Options Standard Condenser Motor - EC Motor - Per Fan				
Electrical Input Power	kW	0.73	0.73	0.73
Full Load Amps	A	3.3	3.3	3.3

Mechanical

(1) Entering air 24°C/45% RH condenser water in / out: 30°C/35°C.
(2) Fan Gain / Fan power input based upon fan operating with design airflow at 25Pa ESP, These values may change with different ESP.
(3) With Standard forward curved fan motors; Machine weight includes a refrigerant charge /Operating weight includes calculated water volume.
(4) Backward curved EC fan options quote electrical power. All other options quote shaft power.
(5) For refrigerant charges, refer to ***Unit Refrigerant Charge (kg/Circuit)***.
(6) Based on air temperature of 15.5°C leaving the evaporator coil.
(7) Based upon low pressure hot water 82°C inlet / 71°C outlet. Air on 20°C. Refer to ***Low Pressure Hot Water (Optional Extra) - X & WX Models***.

Electrical

(1) Values given for full function units (incl. electric heating, humidification and matched condenser) at 7°C evaporating and 54.4°C condensing with standard forward curved fan motors, for optional data, please contact Airedale.
(2) Values given for Cooling only units (incl. Compressor, evaporator fan and matched condenser) at 7°C evaporating and 54.4°C condensing, for optional data, please contact Airedale.
(3) Electrical input power relates to the maximum absorbed electrical power. Actual operating fan power input is shown in the mechanical data tables.

Technical Data Downflow Units WX Type DF20WX2 - DF26WX2

Mechanical Data

			DF20WX2-EZRE-2	DF22WX2-EZRE-2
Capacity	(1)			
Nominal Cooling		kW	24.8	25.6
Total Heat of Rejection		kW	33.1	33.8
Capacity Steps			2	2
Dimensions - W x D x H		mm	1310 x 670 x 1940	1310 x 670 x 1940
Weight	(3)	kg	334 / 336	334 / 336
Construction			Panels: Galvanised Sheet Steel, Epoxy Baked Powder Paint - Black, (RAL7021)	
Material/Colour			Frame: Aluminium Frame With Aluminium Corners	
Evaporator			Rifled Copper Tube / Turbulated Hydrophilic Coated Aluminium Fins	
Cooling/Dehum Stages			2/1	2/1
Condenser			Stainless Steel Brazed Plate	
Water Volume		l	2.5	2.5
Evaporator Fan				
Motor - AC Motor			Centrifugal Forward Curved AC - Designed To 25Pa ESP	
Fan Transmission Type			Direct Drive	
Quantity			2	2
Motor Shaft Power	(4)	kW	N/A	N/A
Maximum ESP		Pa	194	43
Nominal Airflow		m³/s	1.70	2.00
Compressor - Scroll			Tandem	
Quantity			2	2
Oil Charge Volume (Total)		l	2.40	2.40
Oil Type			Polyol Ester	
Connections				
Water Inlet / Outlet		mm	28	28
Condensate Drain Hose		mm	19	19
Filtration			Disposable To ISO16890-ISO-C-75 - 50mm	
Quantity			3	3
OPTIONAL EXTRAS				
Electric Heating (Total)		kW	15.0	15.0
Humidifier				
Capacity		kg/hr	0.6 - 3.0	0.6 - 3.0
Feed/Drain			3/4" BSPF Braided Flexible Hose / 19mm Hose Connection	
Condensate Pump				
Head		m	8	8
Flow		l/m	5	5
Drain			10mm Stainless Steel Stub Connection	
Optional Fan - EC Motor			Centrifugal Backward Curved EC - Designed To 25Pa ESP	
Fan Transmission Type			Direct Drive	
Quantity			1	1
Motor Shaft Power	(4)	kW	N/A	N/A
Speed @ 25Pa / Maximum ESP		rpm	1745 / 2165	2055 / 2165
Maximum ESP		Pa	450	145
Low Pressure Hot Water	(7)		Copper Tube / Aluminium Fin	
Capacity Gross		kW	16.1	16.6
Water Flow (Nominal)		l/s	0.36	0.37
LPHW Connection Sizes		mm	22	22
Threaded Connection				
Brass Male Taper		in	1	1

Technical Data Downflow Units WX Type DF20WX2 - DF26WX2

Electrical Data

		DF20WX2-EZRE-2	DF22WX2-EZRE-2
Unit Data Full Function - WX			
Nominal Run Amps	A	88.4	88.4
Maximum Start Amps	A	193.5	193.5
Recommended Mains Fuse Size	A	100	100
Unit Data Cooling Only - WX			
Nominal Run Amps	A	49.1	49.1
Maximum Start Amps	A	154.1	154.1
Recommended Mains Fuse Size	A	63	63
Max Mains Incoming Cable Size	mm²	35	35
Mains Supply	V	220V / 3PH / 60HZ	
Control Circuit	VAC	24	24
Evaporator Fan - Motor Per Fan			
Electrical Input Power	kW	2.2	2.2
Full Load Amps	A	9.6	9.6
Locked Rotor Amps	A	24	24
Compressor - Per Compressor			
Quantity x Motor Size	kW	2 x 5.16	2 x 5.16
Nominal Run Amps	A	14.9	14.9
Locked Rotor Amps	A	120	120
Type of Start			
Standard Condenser Match - AC Motor - Per Fan			
Electrical Input Power	kW	0.64	0.64
Full Load Amps	A	3.02	3.02
OPTIONAL EXTRAS			
Electric Heating			
Stage of Reheat		2	2
Number of Elements		6	6
Rating	kW	15	15
Curent per Phase	A	39.36	39.36
Humidifier			
Capacity	kg/hr	3	3
Rating	kW	2.25	2.25
Full Load Amps	A	5.90	5.90
Evaporator Fan Options Larger Fan Motor - AC Motor - Per Fan			
Electrical Input Power	kW	N/A	N/A
Full Load Amps	A	N/A	N/A
Locked Rotor Amps	A	N/A	N/A
Standard Size Motor - EC Motor - Per Fan			
Electrical Input Power	kW	2.63	2.63
Full Load Amps	A	9.8	9.8
Condenser Fan Options Standard Condenser Motor - EC Motor - Per Fan			
Electrical Input Power	kW	0.73	0.73
Full Load Amps	A	3.3	3.3

Mechanical

(1) Entering air 24°C/45% RH condenser water in / out: 30°C/35°C.
(2) Fan Gain / Fan power input based upon fan operating with design airflow at 25Pa ESP, These values may change with different ESP.
(3) With Standard forward curved fan motors; Machine weight includes a refrigerant charge /Operating weight includes calculated water volume.
(4) Backward curved EC fan options quote electrical power. All other options quote shaft power.
(5) For refrigerant charges, refer to ***Unit Refrigerant Charge (kg/Circuit)***.
(6) Based on air temperature of 15.5°C leaving the evaporator coil.
(7) Based upon low pressure hot water 82°C inlet / 71°C outlet. Air on 20°C. Refer to ***Low Pressure Hot Water (Optional Extra) - X & WX Models***.

Electrical

(1) Values given for full function units (incl. electric heating, humidification and matched condenser) at 7°C evaporating and 54.4°C condensing with standard forward curved fan motors, for optional data, please contact Airedale.
(2) Values given for Cooling only units (incl. Compressor, evaporator fan and matched condenser) at 7°C evaporating and 54.4°C condensing, for optional data, please contact Airedale.
(3) Electrical input power relates to the maximum absorbed electrical power. Actual operating fan power input is shown in the mechanical data tables.

Technical Data Downflow Units WX Type DF28WX - DF31WX

Mechanical Data

			DF28WX-EZRE-2	DF31WX-EZRE-2
Capacity	(1)			
Nominal Cooling		kW	27.2	31.5
Total Heat of Rejection		kW	36.2	42.1
Capacity Steps			1	1
Dimensions - W x D x H		mm	1460 x 750 x 1940	1460 x 750 x 1940
Weight	(3)	kg	470 / 476	475 / 481
Construction			Panels: Galvanised Sheet Steel, Epoxy Baked Powder Paint - Black, (RAL7021)	
Material/Colour			Frame: Aluminium Frame With Aluminium Corners	
Evaporator			Rifled Copper Tube / Turbulated Hydrophilic Coated Aluminium Fins	
Cooling/Dehum Stages			1/1	1/1
Condenser			Stainless Steel Brazed Plate	
Water Volume		l	6.1	6.1
Evaporator Fan				
Motor - AC Motor			Centrifugal Forward Curved AC - Designed To 25Pa ESP	
Fan Transmission Type			Belt & Pulley	
Quantity			1	1
Motor Shaft Power	(4)	kW	2.2	4
Maximum ESP		Pa	75	265
Nominal Airflow		m³/s	2.40	2.80
Compressor - Scroll			Single	
Quantity			1	1
Oil Charge Volume (Total)		l	3.30	3.30
Oil Type			Polyol Ester	
Connections				
Water Inlet / Outlet		mm	35	35
Condensate Drain Hose		mm	19	19
Filtration			Disposable To ISO16890-ISO-C-75 - 75mm	
Quantity			3	3
OPTIONAL EXTRAS				
Electric Heating (Total)		kW	20.0	20.0
Humidifier				
Capacity		kg/hr	1.6 - 8.0	1.6 - 8.0
Feed/Drain			3/4” BSPF Braided Flexible Hose / 19mm Hose Connection	
Condensate Pump				
Head		m	5	5
Flow		l/m	10.8	10.8
Drain			10mm Stainless Steel Stub Connection	
Evaporator Fan Options:				
Larger Fan Motor - AC Motor			Centrifugal Forward Curved AC - Designed To 25Pa ESP	
Fan Transmission Type			Belt & Pulley	
Quantity			1.00	N/A
Motor Shaft Power	(4)	kW	3.0 / 4.0	N/A
Speed @ Maximum ESP		rpm	1144 / 1439	N/A
Maximum ESP		Pa	362 / 722	N/A
Optional Fan - EC Motor			Centrifugal Backward Curved EC - Designed To 25Pa ESP	
Fan Transmission Type			Direct Drive	
Quantity			2	2
Motor Shaft Power	(4)	kW	N/A	N/A
Speed @ 25Pa / Maximum ESP		rpm	1570 / 2165	1775 / 2165
Maximum ESP		Pa	595	390
Low Pressure Hot Water	(7)		Copper Tube / Aluminium Fin	
Capacity Gross		kW	21.3	22.7
Water Flow (Nominal)		l/s	0.48	0.51
LPHW Connection Sizes		mm	22	22
Threaded Connection				
Brass Male Taper		in	1 1/4	1 1/4

Technical Data Downflow Units WX Type DF28WX - DF31WX

Electrical Data

		DF28WX-EZRE-2	DF31WX-EZRE-2
Unit Data Full Function - WX			
Nominal Run Amps	A	99.4	111.1
Maximum Start Amps	A	270.9	344.0
Recommended Mains Fuse Size	A	125	125
Unit Data Cooling Only - WX			
Nominal Run Amps	A	40.4	52.1
Maximum Start Amps	A	211.9	285.0
Recommended Mains Fuse Size	A	50	63
Max Mains Incoming Cable Size	mm²	50	50
Mains Supply	V	220V / 3PH / 60HZ	
Control Circuit	VAC	24	24
Evaporator Fan - Motor Per Fan			
Electrical Input Power	kW	2.6	4.6
Full Load Amps	A	8.37	14.45
Locked Rotor Amps	A	58.59	101.15
Compressor - Per Compressor			
Quantity x Motor Size	kW	1 x 10.79	1 x 12.36
Nominal Run Amps	A	31.48	37.12
Locked Rotor Amps	A	203	270
Type of Start			
Standard Condenser Match - AC Motor - Per Fan			
Electrical Input Power	kW	0.64	0.64
Full Load Amps	A	3.02	3.02
OPTIONAL EXTRAS			
Electric Heating			
Stage of Reheat		3	3
Number of Elements		8	8
Rating	kW	20	20
Curent per Phase	A	59.05	59.05
Humidifier			
Capacity	kg/hr	8	8
Rating	kW	6.00	6.00
Full Load Amps	A	15.75	15.75
Evaporator Fan Options Larger Fan Motor - AC Motor - Per Fan			
Electrical Input Power	kW	3.5	N/A
Full Load Amps	A	11.14	N/A
Locked Rotor Amps	A	77.98	N/A
Standard Size Motor - EC Motor - Per Fan			
Electrical Input Power	kW	2.63	2.63
Full Load Amps	A	9.8	9.8
Condenser Fan Options Standard Condenser Motor - EC Motor - Per Fan			
Electrical Input Power	kW	0.73	0.73
Full Load Amps	A	3.3	3.3

Mechanical

(1) Entering air 24°C/45% RH condenser water in / out: 30°C/35°C.
(2) Fan Gain / Fan power input based upon fan operating with design airflow at 25Pa ESP, These values may change with different ESP.
(3) With Standard forward curved fan motors; Machine weight includes a refrigerant charge /Operating weight includes calculated water volume.
(4) Backward curved EC fan options quote electrical power. All other options quote shaft power.
(5) For refrigerant charges, refer to ***Unit Refrigerant Charge (kg/Circuit)***.
(6) Based on air temperature of 15.5°C leaving the evaporator coil.
(7) Based upon low pressure hot water 82°C inlet / 71°C outlet. Air on 20°C. Refer to ***Low Pressure Hot Water (Optional Extra) - X & WX Models***.

Electrical

(1) Values given for full function units (incl. electric heating, humidification and matched condenser) at 7°C evaporating and 54.4°C condensing with standard forward curved fan motors, for optional data, please contact Airedale.
(2) Values given for Cooling only units (incl. Compressor, evaporator fan and matched condenser) at 7°C evaporating and 54.4°C condensing, for optional data, please contact Airedale.
(3) Electrical input power relates to the maximum absorbed electrical power. Actual operating fan power input is shown in the mechanical data tables.

Technical Data Downflow Units WX Type DF35WX - DF45WX

Mechanical Data

			DF35WX-EZRE-2	DF40WX-EZRE-2	DF45WX-EZRE-2
Capacity	(1)				
Nominal Cooling		kW	36.7	41.5	46.3
Total Heat of Rejection		kW	48.8	55.3	61.6
Capacity Steps			1	1	1
Dimensions - W x D x H		mm	1835 x 750 x 1940	1835 x 750 x 1940	1835 x 750 x 1940
Weight	(3)	kg	537 / 543	565 / 571	640 / 650
Construction			Panels: Galvanised Sheet Steel, Epoxy Baked Powder Paint - Black, (RAL7021)		
Material/Colour			Frame: Aluminium Frame With Aluminium Corners		
Evaporator			Rifled Copper Tube / Turbulated Hydrophilic Coated Aluminium Fins		
Cooling/Dehum Stages			1/1	1/1	1/1
Condenser			Stainless Steel Brazed Plate		
Water Volume		l	6.1	6.1	9.9
Evaporator Fan					
Motor - AC Motor			Centrifugal Forward Curved AC - Designed To 25Pa ESP		
Fan Transmission Type			Belt & Pulley		
Quantity			1	1	1
Motor Shaft Power	(4)	kW	4	5.5	5.5
Maximum ESP		Pa	165	175	175
Nominal Airflow		m³/s	3.30	3.70	3.70
Compressor - Scroll			Single		
Quantity			1	1	1
Oil Charge Volume (Total)		l	3.30	3.30	6.70
Oil Type			Polyol Ester		
Connections					
Water Inlet / Outlet		mm	35	35	42
Condensate Drain Hose		mm	19	19	19
Filtration			Disposable To ISO16890-ISO-C-75 - 75mm		
Quantity			3	3	3
OPTIONAL EXTRAS					
Electric Heating (Total)		kW	20.0	20.0	20.0
Humidifier					
Capacity		kg/hr	3.0 - 15.0	3.0 - 15.0	3.0 - 15.0
Feed/Drain			3/4" BSPF Braided Flexible Hose / 19mm Hose Connection		
Condensate Pump					
Head		m	5	5	5
Flow		l/m	10.8	10.8	10.8
Drain			10mm Stainless Steel Stub Connection		
Evaporator Fan Options:					
Larger Fan Motor - AC Motor			Centrifugal Forward Curved AC - Designed To 25Pa ESP		
Fan Transmission Type			Belt & Pulley		
Quantity			1	N/A	N/A
Motor Shaft Power	(4)	kW	5.5	N/A	N/A
Speed @ Maximum ESP		rpm	1196	N/A	N/A
Maximum ESP		Pa	322	N/A	N/A
Optional Fan - EC Motor			Centrifugal Backward Curved EC - Designed To 25Pa ESP		
Fan Transmission Type			Direct Drive		
Quantity			2	2	2
Motor Shaft Power	(4)	kW	N/A	N/A	N/A
Speed @ 25Pa / Maximum ESP		rpm	1895 / 2165	2135 / 2165	2135 / 2165
Maximum ESP		Pa	285	70	70
Low Pressure Hot Water	(7)		Copper Tube / Aluminium Fin		
Capacity Gross		kW	30.0	31.5	31.5
Water Flow (Nominal)		l/s	0.67	0.70	0.70
LPHW Connection Sizes		mm	22	22	22
Threaded Connection					
Brass Male Taper		in	1 1/4	1 1/4	1 1/2

Technical Data Downflow Units WX Type DF35WX - DF45WX

Electrical Data

		DF35WX-EZRE-2	DF40WX-EZRE-2	DF45WX-EZRE-2
Unit Data Full Function - WX				
Nominal Run Amps	A	114.1	126.7	133.0
Maximum Start Amps	A	341.0	384.0	426.0
Recommended Mains Fuse Size	A	125	160	160
Unit Data Cooling Only - WX				
Nominal Run Amps	A	55.1	67.7	74.0
Maximum Start Amps	A	282.0	325.0	367.0
Recommended Mains Fuse Size	A	80	80	100
Max Mains Incoming Cable Size	mm²	95	95	95
Mains Supply	V		220V / 3PH / 60HZ	
Control Circuit	VAC	24	24	24
Evaporator Fan - Motor Per Fan				
Electrical Input Power	kW	4.6	5.5	5.5
Full Load Amps	A	14.45	20.46	20.46
Locked Rotor Amps	A	101.15	157.5	157.5
Compressor - Per Compressor				
Quantity x Motor Size	kW	1 x 13.98	1 x 16.07	1 x 18.09
Nominal Run Amps	A	40.11	46.72	53.0
Locked Rotor Amps	A	267	304	346
Type of Start				
Standard Condenser Match - AC Motor - Per Fan				
Electrical Input Power	kW	0.64	0.64	0.64
Full Load Amps	A	3.02	3.02	3.02
OPTIONAL EXTRAS				
Electric Heating				
Stage of Reheat		3	3	3
Number of Elements		8	8	8
Rating	kW	20	20	20
Curent per Phase	A	59.05	59.05	59.05
Humidifier				
Capacity	kg/hr	15	15	15
Rating	kW	11.25	11.25	11.25
Full Load Amps	A	29.52	29.52	29.52
Evaporator Fan Options Larger Fan Motor - AC Motor - Per Fan				
Electrical Input Power	kW	6.3	N/A	N/A
Full Load Amps	A	25.63	N/A	N/A
Locked Rotor Amps	A	197.35	N/A	N/A
Standard Size Motor - EC Motor - Per Fan				
Electrical Input Power	kW	2.63	2.63	2.63
Full Load Amps	A	9.8	9.8	9.8
Condenser Fan Options Standard Condenser Motor - EC Motor - Per Fan				
Electrical Input Power	kW	0.73	0.73	0.73
Full Load Amps	A	3.3	3.3	3.3

Mechanical

(1) Entering air 24°C/45% RH condenser water in / out: 30°C/35°C.
(2) Fan Gain / Fan power input based upon fan operating with design airflow at 25Pa ESP, These values may change with different ESP.
(3) With Standard forward curved fan motors; Machine weight includes a refrigerant charge /Operating weight includes calculated water volume.
(4) Backward curved EC fan options quote electrical power. All other options quote shaft power.
(5) For refrigerant charges, refer to ***Unit Refrigerant Charge (kg/Circuit)***.
(6) Based on air temperature of 15.5°C leaving the evaporator coil.
(7) Based upon low pressure hot water 82°C inlet / 71°C outlet. Air on 20°C. Refer to ***Low Pressure Hot Water (Optional Extra) - X & WX Models***.

Electrical

(1) Values given for full function units (incl. electric heating, humidification and matched condenser) at 7°C evaporating and 54.4°C condensing with standard forward curved fan motors, for optional data, please contact Airedale.
(2) Values given for Cooling only units (incl. Compressor, evaporator fan and matched condenser) at 7°C evaporating and 54.4°C condensing, for optional data, please contact Airedale.
(3) Electrical input power relates to the maximum absorbed electrical power. Actual operating fan power input is shown in the mechanical data tables.

Technical Data Downflow Units WX Type DF50WX2 - DF60WX2

Mechanical Data

			DF50WX2-EZRE-2	DF55WX2-EZRE-2	DF60WX2-EZRE-2
Capacity	(1)				
Nominal Cooling		kW	52.7	60.6	68.6
Total Heat of Rejection		kW	70.7	81.7	92.4
Capacity Steps			2	2	2
Dimensions - W x D x H		mm	2170 x 750 x 1940	2170 x 750 x 1940	2170 x 750 x 1940
Weight	(3)	kg	712 / 722	731 / 741	731 / 741
Construction			Panels: Galvanised Sheet Steel, Epoxy Baked Powder Paint - Black, (RAL7021)		
Material/Colour			Frame: Aluminium Frame With Aluminium Corners		
Evaporator			Rifled Copper Tube / Turbulated Hydrophilic Coated Aluminium Fins		
Cooling/Dehum Stages			2/1	2/1	2/1
Condenser			Stainless Steel Brazed Plate		
Water Volume		l	9.9	9.9	9.9
Evaporator Fan					
Motor - AC Motor			Centrifugal Forward Curved AC - Designed To 25Pa ESP		
Fan Transmission Type			Belt & Pulley		
Quantity			2	2	2
Motor Shaft Power	(4)	kW	2.2	2.2	3
Maximum ESP		Pa	35	35	75
Nominal Airflow		m³/s	4.20	4.20	4.60
Compressor - Scroll			Tandem		
Quantity			2	2	2
Oil Charge Volume (Total)		l	6.60	6.60	6.60
Oil Type			Polyol Ester		
Connections					
Water Inlet / Outlet		mm	42	42	42
Condensate Drain Hose		mm	19	19	19
Filtration			Disposable To ISO16890-ISO-C-75 - 75mm		
Quantity			4	4	4
OPTIONAL EXTRAS					
Electric Heating (Total)		kW	30.0	30.0	30.0
Humidifier					
Capacity		kg/hr	3.0 - 15.0	3.0 - 15.0	3.0 - 15.0
Feed/Drain			3/4" BSPF Braided Flexible Hose / 19mm Hose Connection		
Condensate Pump					
Head		m	5	5	5
Flow		l/m	10.8	10.8	10.8
Drain			10mm Stainless Steel Stub Connection		
Evaporator Fan Options:					
Larger Fan Motor - AC Motor			Centrifugal Forward Curved AC - Designed To 25Pa ESP		
Fan Transmission Type			Belt & Pulley		
Quantity			2	2	2
Motor Shaft Power	(4)	kW	3.0 / 4.0	3.0 / 4.0	4.0
Speed @ Maximum ESP		rpm	1448 / 1498	1448 / 1498	1497
Maximum ESP		Pa	310 / 360	310 / 360	275
Optional Fan - EC Motor			Centrifugal Backward Curved EC - Designed To 25Pa ESP		
Fan Transmission Type			Direct Drive		
Quantity			2	2	2
Motor Shaft Power	(4)	kW	N/A	N/A	N/A
Speed @ 25Pa / Maximum ESP		rpm	1265 / 1510	1265 / 1510	1390 / 1510
Maximum ESP		Pa	320	320	185
Low Pressure Hot Water	(7)		Copper Tube / Aluminium Fin		
Capacity Gross		kW	38.3	38.3	39.8
Water Flow (Nominal)		l/s	0.85	0.85	0.89
LPHW Connection Sizes		mm	22	22	22
Threaded Connection					
Brass Male Taper		in	1 1/2	1 1/2	1 1/2

Technical Data Downflow Units WX Type DF50WX2 - DF60WX2

Electrical Data

		DF50WX2-EZRE-2	DF55WX2-EZRE-2	DF60WX2-EZRE-2
Unit Data Full Function - WX				
Nominal Run Amps	A	158.9	170.2	181.7
Maximum Start Amps	A	330.4	403.1	408.6
Recommended Mains Fuse Size	A	200	200	200
Unit Data Cooling Only - WX				
Nominal Run Amps	A	80.2	91.5	103.0
Maximum Start Amps	A	251.7	324.4	329.9
Recommended Mains Fuse Size	A	100	125	125
Max Mains Incoming Cable Size	mm²	185	185	185
Mains Supply	V		220V / 3PH / 60HZ	
Control Circuit	VAC	24	24	24
Evaporator Fan - Motor Per Fan				
Electrical Input Power	kW	2.6	2.6	3.5
Full Load Amps	A	8.37	8.37	11.14
Locked Rotor Amps	A	58.59	58.59	77.98
Compressor - Per Compressor				
Quantity x Motor Size	kW	2 x 10.79	2 x 12.36	2 x 13.98
Nominal Run Amps	A	31.48	37.12	40.11
Locked Rotor Amps	A	203	270	267
Type of Start				
Standard Condenser Match - AC Motor - Per Fan				
Electrical Input Power	kW	0.64	0.64	0.64
Full Load Amps	A	3.02	3.02	3.02
OPTIONAL EXTRAS				
Electric Heating				
Stage of Reheat		3	3	3
Number of Elements		12	12	12
Rating	kW	30	30	30
Curent per Phase	A	78.73	78.73	78.73
Humidifier				
Capacity	kg/hr	15	15	15
Rating	kW	11.25	11.25	11.25
Full Load Amps	A	29.52	29.52	29.52
Evaporator Fan Options Larger Fan Motor - AC Motor - Per Fan				
Electrical Input Power	kW	3.5	3.5	4.6
Full Load Amps	A	11.14	11.14	14.45
Locked Rotor Amps	A	77.98	77.98	101.15
Standard Size Motor - EC Motor - Per Fan				
Electrical Input Power	kW	2.9	2.9	2.9
Full Load Amps	A	9.2	9.2	9.2
Condenser Fan Options Standard Condenser Motor - EC Motor - Per Fan				
Electrical Input Power	kW	0.73	0.73	0.73
Full Load Amps	A	3.3	3.3	3.3

Mechanical

(1) Entering air 24°C/45% RH condenser water in / out: 30°C/35°C.
(2) Fan Gain / Fan power input based upon fan operating with design airflow at 25Pa ESP, These values may change with different ESP.
(3) With Standard forward curved fan motors; Machine weight includes a refrigerant charge /Operating weight includes calculated water volume.
(4) Backward curved EC fan options quote electrical power. All other options quote shaft power.
(5) For refrigerant charges, refer to ***Unit Refrigerant Charge (kg/Circuit)***.
(6) Based on air temperature of 15.5°C leaving the evaporator coil.
(7) Based upon low pressure hot water 82°C inlet / 71°C outlet. Air on 20°C. Refer to ***Low Pressure Hot Water (Optional Extra) - X & WX Models***.

Electrical

(1) Values given for full function units (incl. electric heating, humidification and matched condenser) at 7°C evaporating and 54.4°C condensing with standard forward curved fan motors, for optional data, please contact Airedale.
(2) Values given for Cooling only units (incl. Compressor, evaporator fan and matched condenser) at 7°C evaporating and 54.4°C condensing, for optional data, please contact Airedale.
(3) Electrical input power relates to the maximum absorbed electrical power. Actual operating fan power input is shown in the mechanical data tables.

Technical Data Upflow Units WX Type - 2

Performance Data

Cooling Capacity (1)		Condenser Entering/Leaving Temperature - Based on 5°C ΔT											
	Air On	25°C/30°C			30°C/35°C			35°C/40°C			40°C/45°C		
	(DB°C/%RH)	TC (kW)	SC (kW)	THR (kW)	TC (kW)	SC (kW)	THR (kW)	TC (kW)	SC (kW)	THR (kW)	TC (kW)	SC (kW)	THR (kW)
V8WX-EZRE-2	22/50	9.1	8.8	12.3	9.1	8.8	12.3	9.0	8.7	12.2	8.6	8.4	12.1
	24/45	9.4	9.3	12.6	9.4	9.3	12.6	9.3	9.2	12.5	8.9	8.9	12.4
	26/40	9.7	9.7	12.8	9.7	9.7	12.8	9.5	9.5	12.8	9.1	9.1	12.7
V10WX-EZRE-2	22/50	10.1	10.1	13.6	10.1	10.1	13.6	9.9	9.9	13.5	9.4	9.4	13.3
	24/45	10.4	10.4	13.9	10.4	10.4	13.9	10.2	10.2	13.8	9.7	9.7	13.6
	26/40	10.8	10.8	14.3	10.8	10.8	14.3	10.5	10.5	14.2	10.0	10.0	14.0
V13WX-EZRE-2	22/50	13.1	12.2	17.4	13.1	12.2	17.4	12.8	12.0	17.3	12.2	11.7	17.2
	24/45	13.5	13.2	17.9	13.5	13.2	17.9	13.2	13.0	17.8	12.6	12.6	17.6
	26/40	13.9	13.9	18.3	13.9	13.9	18.3	13.6	13.6	18.2	13.0	13.0	18.0
V15WX-EZRE-2	22/50	15.8	14.9	21.1	15.8	14.9	21.1	15.6	14.8	21.0	14.8	14.3	20.7
	24/45	16.3	15.8	21.6	16.3	15.8	21.6	16.1	15.6	21.5	15.3	15.1	21.2
	26/40	16.8	16.8	22.1	16.8	16.8	22.1	16.5	16.5	22.0	15.8	15.8	21.7
V17WX-EZRE-2	22/50	19.0	16.9	25.5	19.0	16.9	25.5	18.7	16.8	25.4	17.8	16.3	25.1
	24/45	19.5	18.1	26.1	19.5	18.1	26.1	19.2	17.9	25.9	18.3	17.4	25.6
	26/40	20.0	19.4	26.6	20.0	19.4	26.6	19.7	19.2	26.4	18.8	18.7	26.1
V20WX2-EZRE-2	22/50	23.7	21.5	31.9	23.7	21.5	31.9	23.2	21.3	31.7	22.0	20.6	31.4
	24/45	24.4	23.2	32.6	24.4	23.2	32.6	23.9	22.9	32.4	22.7	22.2	32.1
	26/40	25.0	24.7	33.2	25.0	24.7	33.2	24.5	24.4	33.0	23.4	23.4	32.7
V22WX2-EZRE-2	22/50	24.3	23.2	32.5	24.3	23.2	32.5	23.8	22.9	32.4	22.7	22.2	32.0
	24/45	25.1	24.9	33.3	25.1	24.9	33.3	24.6	24.5	33.1	23.4	23.4	32.8
	26/40	25.8	25.8	34.1	25.8	25.8	34.1	25.3	25.3	33.9	24.2	24.2	33.6
V28WX-EZRE-2	22/50	26.6	26.6	35.6	26.6	26.6	35.6	26.2	26.2	35.4	25.0	25.0	34.9
	24/45	27.7	27.7	36.7	27.7	27.7	36.7	27.3	27.3	36.5	26.1	26.1	36.0
	26/40	28.8	28.8	37.9	28.8	28.8	37.9	28.4	28.4	37.7	27.2	27.2	37.3
V31WX-EZRE-2	22/50	30.8	30.8	41.4	30.8	30.8	41.4	30.4	30.4	41.2	29.0	29.0	40.6
	24/45	32.0	32.0	42.7	32.0	32.0	42.7	31.6	31.6	42.5	30.2	30.2	41.9
	26/40	33.3	33.3	44.1	33.3	33.3	44.1	32.9	32.9	43.9	31.5	31.5	43.4
V31WX2-EZRE-2	22/50	30.7	30.7	41.2	30.7	30.7	41.2	30.3	30.3	41.0	28.9	28.9	40.5
	24/45	31.9	31.9	42.4	31.9	31.9	42.4	31.5	31.5	42.2	30.1	30.1	41.7
	26/40	33.1	33.1	43.6	33.1	33.1	43.6	32.7	32.7	43.4	31.3	31.3	43.0
V35WX-EZRE-2	22/50	35.9	35.9	48.0	35.9	35.9	48.0	35.4	35.4	47.7	33.7	33.7	46.9
	24/45	37.3	37.3	49.5	37.3	37.3	49.5	36.8	36.8	49.2	35.2	35.2	48.5
	26/40	38.9	38.9	51.2	38.9	38.9	51.2	38.3	38.3	50.9	36.8	36.8	50.2

Technical Data Upflow Units WX Type - 2

Performance Data

Cooling Capacity (1)		Condenser Entering/Leaving Temperature - Based on 5°C ΔT											
	Air On	25°C/30°C			30°C/35°C			35°C/40°C			40°C/45°C		
	(DB°C/%RH)	TC (kW)	SC (kW)	THR (kW)	TC (kW)	SC (kW)	THR (kW)	TC (kW)	SC (kW)	THR (kW)	TC (kW)	SC (kW)	THR (kW)
V35WX2-EZRE-2	22/50	38.3	38.3	51.3	38.3	38.3	51.3	37.7	37.7	51.1	35.9	35.9	50.4
	24/45	39.6	39.6	52.6	39.6	39.6	52.6	39.0	39.0	52.4	37.2	37.2	51.8
	26/40	40.9	40.9	54.0	40.9	40.9	54.0	40.3	40.3	53.8	38.7	38.7	53.3
V40WX-EZRE-2	22/50	40.6	40.6	54.4	40.6	40.6	54.4	39.9	39.9	54.1	38.1	38.1	53.3
	24/45	42.2	42.2	56.1	42.2	42.2	56.1	41.5	41.5	55.8	39.7	39.7	55.0
	26/40	43.8	43.8	57.8	43.8	43.8	57.8	43.2	43.2	57.5	41.4	41.4	56.9
V40WX2-EZRE-2	22/50	43.7	43.7	57.7	43.7	43.7	57.7	43.0	43.0	57.3	41.0	41.0	56.5
	24/45	45.2	45.2	59.2	45.2	45.2	59.2	44.5	44.5	58.8	42.5	42.5	58.1
	26/40	46.7	46.7	60.6	46.7	46.7	60.6	45.9	45.9	60.3	44.0	44.0	59.7
V45WX2-EZRE-2	22/50	50.0	47.8	66.1	50.0	47.8	66.1	49.2	47.3	65.8	46.9	45.9	64.7
	24/45	51.6	51.3	67.7	51.6	51.3	67.7	50.8	50.8	67.3	48.5	48.5	66.3
	26/40	53.1	53.1	69.3	53.1	53.1	69.3	52.3	52.3	68.9	50.0	50.0	67.9
V50WX2-EZRE-2	22/50	51.7	50.8	69.6	51.7	50.8	69.6	50.9	50.3	69.2	48.4	48.4	68.2
	24/45	53.6	53.6	71.6	53.6	53.6	71.6	52.8	52.8	71.2	50.3	50.3	70.2
	26/40	55.5	55.5	73.7	55.5	55.5	73.7	54.6	54.6	73.2	52.2	52.2	72.3
V55WX2-EZRE-2	22/50	59.5	55.5	80.6	59.5	55.5	80.6	58.5	54.9	80.2	55.8	53.3	79.1
	24/45	61.6	59.7	82.8	61.6	59.7	82.8	60.5	59.1	82.3	57.8	57.3	81.2
	26/40	63.5	63.5	84.9	63.5	63.5	84.9	62.4	62.4	84.4	59.7	59.7	83.2
V60WX2-EZRE-2	22/50	67.5	62.1	91.3	67.5	62.1	91.3	66.2	61.4	90.7	63.0	59.4	89.3
	24/45	69.8	66.7	93.7	69.8	66.7	93.7	68.4	65.8	93.0	65.2	63.8	91.6
	26/40	71.9	71.4	96.0	71.9	71.4	96.0	70.5	70.5	95.3	67.3	67.3	93.9

Technical Data Upflow Units WX Type - 2

Noise Data

	Sound Measurement		Overall dB(A)	Frequency (Hz) dB 63	125	250	500	1000	2000	4000	8000
V8WX	Discharge Air	Power	78	71	75	74	73	73	72	65	60
	Return Air	Power	63	68	71	63	58	59	53	48	41
	Case Breakout	Power	63	68	71	63	58	59	53	48	41
	Sound @ 3m	Pressure	49	53	57	49	43	44	39	33	26
V10WX	Discharge Air	Power	81	74	78	77	76	76	75	68	63
	Return Air	Power	66	71	74	66	61	62	56	50	43
	Case Breakout	Power	66	71	74	66	61	62	56	50	43
	Sound @ 3m	Pressure	51	56	61	52	46	47	41	36	29
V13WX	Discharge Air	Power	78	72	75	73	73	73	72	65	60
	Return Air	Power	63	69	71	63	58	59	53	48	42
	Case Breakout	Power	63	69	71	63	58	59	53	48	42
	Sound @ 3m	Pressure	48	54	57	48	43	44	38	34	27
V15WX	Discharge Air	Power	74	71	76	73	70	69	68	63	58
	Return Air	Power	62	68	72	63	56	56	49	48	42
	Case Breakout	Power	62	68	72	63	56	56	49	48	42
	Sound @ 3m	Pressure	47	53	57	48	41	42	35	34	27
V17WX	Discharge Air	Power	78	75	79	77	74	73	71	67	62
	Return Air	Power	65	72	75	67	59	59	53	51	44
	Case Breakout	Power	65	72	75	67	59	59	53	51	44
	Sound @ 3m	Pressure	50	57	61	52	44	44	38	36	30
V20WX2	Discharge Air	Power	82	75	79	78	77	78	76	69	64
	Return Air	Power	67	73	75	67	62	63	57	52	46
	Case Breakout	Power	67	73	75	67	62	63	57	52	46
	Sound @ 3m	Pressure	53	58	61	53	48	48	42	37	31
V22WX2	Discharge Air	Power	86	80	84	82	81	82	80	73	68
	Return Air	Power	71	77	80	71	66	67	61	55	49
	Case Breakout	Power	71	77	80	71	66	67	61	55	49
	Sound @ 3m	Pressure	57	62	65	57	52	52	46	41	35
V28WX	Discharge Air	Power	90	102	95	86	84	85	81	81	78
	Return Air	Power	79	89	80	79	76	75	68	63	57
	Case Breakout	Power	79	89	80	79	76	75	68	63	57
	Sound @ 3m	Pressure	64	75	65	65	62	60	53	49	42
V31WX	Discharge Air	Power	93	105	96	89	86	88	84	84	82
	Return Air	Power	81	92	80	82	78	77	70	66	60
	Case Breakout	Power	81	92	80	82	78	77	70	66	60
	Sound @ 3m	Pressure	66	77	66	67	64	62	56	51	45
V31WX2	Discharge Air	Power	93	105	96	89	86	88	84	84	82
	Return Air	Power	81	91	80	82	77	77	70	66	60
	Case Breakout	Power	81	91	80	82	77	77	70	66	60
	Sound @ 3m	Pressure	66	76	66	67	63	62	55	51	46

(1) dB(A) is the overall sound level, measured on the A scale
(2) All sound data measured at nominal conditions, Discharge Air, Return air and case breakout is sound power.

Technical Data Upflow Units WX Type - 2

Noise Data

	Sound Measurement		Overall dB(A)	Frequency (Hz) dB 63	125	250	500	1000	2000	4000	8000
V35WX	Discharge Air	Power	92	111	98	90	87	82	82	83	80
	Return Air	Power	81	97	82	84	80	72	69	66	58
	Case Breakout	Power	81	97	82	84	80	72	69	66	58
	Sound @ 3m	Pressure	67	82	68	69	66	58	54	51	44
V35WX2	Discharge Air	Power	92	111	98	90	87	82	82	83	80
	Return Air	Power	81	97	82	84	79	72	69	66	59
	Case Breakout	Power	81	97	82	84	79	72	69	66	59
	Sound @ 3m	Pressure	66	82	68	69	65	58	54	51	45
V40WX	Discharge Air	Power	94	113	99	92	89	84	85	85	83
	Return Air	Power	83	98	84	85	82	74	71	68	61
	Case Breakout	Power	83	98	84	85	82	74	71	68	61
	Sound @ 3m	Pressure	68	84	69	71	67	59	56	53	46
V40WX2	Discharge Air	Power	94	113	99	92	89	84	85	85	83
	Return Air	Power	82	98	84	85	81	74	71	68	62
	Case Breakout	Power	82	98	84	85	81	74	71	68	62
	Sound @ 3m	Pressure	68	85	69	71	66	59	56	53	47
V45WX2	Discharge Air	Power	94	113	99	92	89	84	85	85	83
	Return Air	Power	83	98	84	85	83	74	71	68	62
	Case Breakout	Power	83	98	84	85	83	74	71	68	62
	Sound @ 3m	Pressure	69	84	69	71	68	59	57	53	47
V50WX2	Discharge Air	Power	97	115	109	95	92	84	86	84	80
	Return Air	Power	84	99	93	86	83	74	71	66	58
	Case Breakout	Power	84	99	93	86	83	74	71	66	58
	Sound @ 3m	Pressure	70	85	79	72	68	60	57	52	43
V55WX2	Discharge Air	Power	97	115	109	95	92	84	86	84	80
	Return Air	Power	84	99	93	86	83	74	72	66	58
	Case Breakout	Power	84	99	93	86	83	74	72	66	58
	Sound @ 3m	Pressure	70	85	79	72	68	60	57	52	43
V60WX2	Discharge Air	Power	98	116	110	97	93	86	87	86	82
	Return Air	Power	86	102	94	89	85	76	73	69	60
	Case Breakout	Power	86	102	94	89	85	76	73	69	60
	Sound @ 3m	Pressure	72	87	80	75	70	61	59	54	46

(1) dB(A) is the overall sound level, measured on the A scale
(2) All sound data measured at nominal conditions, Discharge Air, Return air and case breakout is sound power.

Technical Data Upflow Units WX Type V8WX - V10WX

Mechanical Data

			V8WX-EZRE-2	V10WX-EZRE-2
Capacity	(1)			
Nominal Cooling		kW	9.4	10.4
Total Heat of Rejection		kW	12.6	13.9
Capacity Steps			1	1
Dimensions - W x D x H		mm	670 x 670 x 1940	670 x 670 x 1940
Weight	(3)	kg	193 / 194	196 / 197
Construction			Panels: Galvanised Sheet Steel, Epoxy Baked	
Material/Colour			Powder Paint - Black, (RAL7021)	
			Frame: Aluminium Frame With Aluminium Corners	
Evaporator			Rifled Copper Tube / Turbulated Hydrophilic Coated Aluminium Fins	
Cooling/Dehum Stages			1/1	1/1
Condenser			Stainless Steel Brazed Plate	
Water Volume		l	1.4	1.4
Evaporator Fan				
Motor - AC Motor			Centrifugal Forward Curved AC - Designed To 25Pa ESP	
Fan Transmission Type			Direct Drive	
Quantity			1	1
Motor Shaft Power	(4)	kW	N/A	N/A
Maximum ESP		Pa	209	222
Nominal Airflow		m³/s	0.75	0.95
Compressor - Scroll			Single	
Quantity			1	1
Oil Charge Volume (Total)		l	0.70	1.20
Oil Type			Polyol Ester	
Refrigeration			Single Circuit	
Charge (Total)		kg	1.6	1.6
Connections				
Water Inlet / Outlet		mm	22	22
Condensate Drain Hose		mm	19	19
Filtration			Disposable To ISO16890-ISO-C-75 - 50mm	
Quantity			1	1
OPTIONAL EXTRAS				
Electric Heating (Total)		kW	7.5	7.5
Humidifier				
Capacity		kg/hr	0.6 - 3.0	0.6 - 3.0
Feed/Drain			3/4" BSPF Braided Flexible Hose / 19mm Hose Connection	
Condensate Pump				
Head		m	8	8
Flow		l/m	5	5
Drain			10mm Stainless Steel Stub Connection	
Optional Fan - EC Motor			Centrifugal Backward Curved EC - Designed To 25Pa ESP	
Fan Transmission Type			Direct Drive	
Quantity			1	1
Motor Shaft Power	(4)	kW	N/A	N/A
Speed @ 25Pa / Maximum ESP		rpm	1705 / 2215	2140 / 2215
Maximum ESP		Pa	220	45
Low Pressure Hot Water	(7)		Copper Tube / Aluminium Fin	
Capacity Gross		kW	7.9	8.9
Water Flow (Nominal)		l/s	0.18	0.20
LPHW Connection Sizes		mm	22	22
Threaded Connection				
Brass Male Taper		in	3/4	3/4

Technical Data Upflow Units WX Type V8WX - V10WX

Electrical Data

		V8WX-EZRE-2	V10WX-EZRE-2
Unit Data Full Function - WX			
Nominal Run Amps	A	39.2	41.6
Maximum Start Amps	A	123.2	124.3
Recommended Mains Fuse Size	A	50	50
Unit Data Cooling Only - WX			
Nominal Run Amps	A	19.5	21.9
Maximum Start Amps	A	103.5	104.6
Recommended Mains Fuse Size	A	25	32
Max Mains Incoming Cable Size	mm²	35	35
Mains Supply	V	220V / 3PH / 60HZ	
Control Circuit	VAC	24	24
Evaporator Fan - Motor Per Fan			
Electrical Input Power	kW	1.6	2.2
Full Load Amps	A	8.5	9.6
Locked Rotor Amps	A	21.2	24
Compressor - Per Compressor			
Quantity x Motor Size	kW	1 x 3.95	1 x 4.43
Nominal Run Amps	A	11.0	12.3
Locked Rotor Amps	A	95	95
Type of Start			
Standard Condenser Match - AC Motor - Per Fan			
Electrical Input Power	kW	0.39	0.39
Full Load Amps	A	1.72	1.72
OPTIONAL EXTRAS			
Electric Heating			
Stage of Reheat		1	1
Number of Elements		3	3
Rating	kW	7.5	7.5
Curent per Phase	A	19.68	19.68
Humidifier			
Capacity	kg/hr	3	3
Rating	kW	2.25	2.25
Full Load Amps	A	5.90	5.90
Evaporator Fan Options Larger Fan Motor - AC Motor - Per Fan			
Electrical Input Power	kW	2.2	N/A
Full Load Amps	A	9.1	N/A
Locked Rotor Amps	A	22.75	N/A
Standard Size Motor - EC Motor - Per Fan			
Electrical Input Power	kW	0.94	0.94
Full Load Amps	A	3	3
Condenser Fan Options Standard Condenser Motor - EC Motor - Per Fan			
Electrical Input Power	kW	0.7	0.7
Full Load Amps	A	3.1	3.1

Mechanical

(1) Entering air 24°C/45% RH condenser water in / out: 30°C/35°C.
(2) Fan Gain / Fan power input based upon fan operating with design airflow at 25Pa ESP, These values may change with different ESP.
(3) With Standard forward curved fan motors; Machine weight includes a refrigerant charge /Operating weight includes calculated water volume.
(4) Backward curved EC fan options quote electrical power. All other options quote shaft power.
(5) For refrigerant charges, refer to ***Unit Refrigerant Charge (kg/Circuit)***.
(6) Based on air temperature of 15.5°C leaving the evaporator coil.
(7) Based upon low pressure hot water 82°C inlet / 71°C outlet. Air on 20°C. Refer to ***Low Pressure Hot Water (Optional Extra) - X & WX Models***.

Electrical

(1) Values given for full function units (incl. electric heating, humidification and matched condenser) at 7°C evaporating and 54.4°C condensing with standard forward curved fan motors, for optional data, please contact Airedale.
(2) Values given for Cooling only units (incl. Compressor, evaporator fan and matched condenser) at 7°C evaporating and 54.4°C condensing, for optional data, please contact Airedale.
(3) Electrical input power relates to the maximum absorbed electrical power. Actual operating fan power input is shown in the mechanical data tables.

Technical Data Upflow Units WX Type V13WX - V17WX

Mechanical Data

			V13WX-EZRE-2	V15WX-EZRE-2	V17WX-EZRE-2
Capacity	(1)				
Nominal Cooling		kW	13.5	16.3	19.5
Total Heat of Rejection		kW	17.9	21.6	26.1
Capacity Steps			1	1	1
Dimensions - W x D x H		mm	990 x 670 x 1940	990 x 670 x 1940	990 x 670 x 1940
Weight	(3)	kg	234 / 235	265 / 267	268 / 270
Construction			Panels: Galvanised Sheet Steel, Epoxy Baked		
Material/Colour			Powder Paint - Black, (RAL7021)		
			Frame: Aluminium Frame With Aluminium Corners		
Evaporator			Rifled Copper Tube / Turbulated Hydrophilic Coated Aluminium Fins		
Cooling/Dehum Stages			1/1	1/1	1/1
Condenser			Stainless Steel Brazed Plate		
Water Volume		l	1.4	2.0	2.5
Evaporator Fan					
Motor - AC Motor			Centrifugal Forward Curved AC - Designed To 25Pa ESP		
Fan Transmission Type			Direct Drive		
Quantity			1	1	1
Motor Shaft Power	(4)	kW	N/A	N/A	N/A
Maximum ESP		Pa	298	127	42
Nominal Airflow		m³/s	1.00	1.20	1.40
Compressor - Scroll			Single		
Quantity			1	1	1
Oil Charge Volume (Total)		l	1.20	1.66	1.89
Oil Type			Polyol Ester		
Refrigeration			Single Circuit		
Charge (Total)		kg	2.1	2.6	2.6
Connections					
Water Inlet / Outlet		mm	22	22	28
Condensate Drain Hose		mm	19	19	19
Filtration			Disposable To ISO16890-ISO-C-75 - 50mm		
Quantity			2	2	2
OPTIONAL EXTRAS					
Electric Heating (Total)		kW	7.5	7.5	7.5
Humidifier					
Capacity		kg/hr	0.6 - 3.0	0.6 - 3.0	0.6 - 3.0
Feed/Drain			3/4" BSPF Braided Flexible Hose / 19mm Hose Connection		
Condensate Pump					
Head		m	8	8	8
Flow		l/m	5	5	5
Drain			10mm Stainless Steel Stub Connection		
Optional Fan - EC Motor			Centrifugal Backward Curved EC - Designed To 25Pa ESP		
Fan Transmission Type			Direct Drive		
Quantity			1	1	1
Motor Shaft Power	(4)	kW	N/A	N/A	N/A
Speed @ 25Pa / Maximum ESP		rpm	1125 / 1560	1330 / 1560	1560 / 1560
Maximum ESP		Pa	275	165	25
Low Pressure Hot Water	(7)		Copper Tube / Aluminium Fin		
Capacity Gross		kW	11.5	12.7	13.7
Water Flow (Nominal)		l/s	0.26	0.28	0.31
LPHW Connection Sizes		mm	22	22	22
Threaded Connection					
Brass Male Taper		in	3/4	3/4	1

Technical Data Upflow Units WX Type V13WX - V17WX

Electrical Data

		V13WX-EZRE-2	V15WX-EZRE-2	V17WX-EZRE-2
Unit Data Full Function - WX				
Nominal Run Amps	A	44.8	45.8	49.4
Maximum Start Amps	A	149.3	150.5	187.5
Recommended Mains Fuse Size	A	50	63	63
Unit Data Cooling Only - WX				
Nominal Run Amps	A	25.2	26.1	29.7
Maximum Start Amps	A	129.6	130.8	167.8
Recommended Mains Fuse Size	A	32	32	40
Max Mains Incoming Cable Size	mm²	35	35	35
Mains Supply	V		220V / 3PH / 60HZ	
Control Circuit	VAC	24	24	24
Evaporator Fan - Motor Per Fan				
Electrical Input Power	kW	2.2	1.9	1.9
Full Load Amps	A	9.6	7.8	7.8
Locked Rotor Amps	A	24	19.5	19.5
Compressor - Per Compressor				
Quantity x Motor Size	kW	1 x 5,53	1 x 6.57	1 x 7.82
Nominal Run Amps	A	15.6	18.3	21.9
Locked Rotor Amps	A	120	123	160
Type of Start				
Standard Condenser Match - AC Motor - Per Fan				
Electrical Input Power	kW	0.64	0.64	0.64
Full Load Amps	A	3.02	3.02	3.02
OPTIONAL EXTRAS				
Electric Heating				
Stage of Reheat		1	1	1
Number of Elements		3	3	3
Rating	kW	7.5	7.5	7.5
Curent per Phase	A	19.68	19.68	19.68
Humidifier				
Capacity	kg/hr	3	3	3
Rating	kW	2.25	2.25	2.25
Full Load Amps	A	5.90	5.90	5.90
Evaporator Fan Options Larger Fan Motor - AC Motor - Per Fan				
Electrical Input Power	kW	N/A	N/A	N/A
Full Load Amps	A	N/A	N/A	N/A
Locked Rotor Amps	A	N/A	N/A	N/A
Standard Size Motor - EC Motor - Per Fan				
Electrical Input Power	kW	1.01	1.01	1.01
Full Load Amps	A	3.2	3.2	3.2
Condenser Fan Options Standard Condenser Motor - EC Motor - Per Fan				
Electrical Input Power	kW	0.73	0.73	0.73
Full Load Amps	A	3.3	3.3	3.3

Mechanical

(1) Entering air 24°C/45% RH condenser water in / out: 30°C/35°C.
(2) Fan Gain / Fan power input based upon fan operating with design airflow at 25Pa ESP, These values may change with different ESP.
(3) With Standard forward curved fan motors; Machine weight includes a refrigerant charge /Operating weight includes calculated water volume.
(4) Backward curved EC fan options quote electrical power. All other options quote shaft power.
(5) For refrigerant charges, refer to ***Unit Refrigerant Charge (kg/Circuit)***.
(6) Based on air temperature of 15.5°C leaving the evaporator coil.
(7) Based upon low pressure hot water 82°C inlet / 71°C outlet. Air on 20°C. Refer to ***Low Pressure Hot Water (Optional Extra) - X & WX Models***.

Electrical

(1) Values given for full function units (incl. electric heating, humidification and matched condenser) at 7°C evaporating and 54.4°C condensing with standard forward curved fan motors, for optional data, please contact Airedale.
(2) Values given for Cooling only units (incl. Compressor, evaporator fan and matched condenser) at 7°C evaporating and 54.4°C condensing, for optional data, please contact Airedale.
(3) Electrical input power relates to the maximum absorbed electrical power. Actual operating fan power input is shown in the mechanical data tables.

Technical Data Upflow Units WX Type V20WX2 - V26WX2

Mechanical Data

			V20WX2-EZRE-2	V22WX2-EZRE-2
Capacity	(1)			
Nominal Cooling		kW	24.4	25.1
Total Heat of Rejection		kW	32.6	33.3
Capacity Steps			2	2
Dimensions - W x D x H		mm	1310 x 670 x 1940	1310 x 670 x 1940
Weight	(3)	kg	326 / 328	326 / 328
Construction			Panels: Galvanised Sheet Steel, Epoxy Baked	
Material/Colour			Powder Paint - Black, (RAL7021)	
			Frame: Aluminium Frame With Aluminium Corners	
Evaporator			Rifled Copper Tube / Turbulated Hydrophilic Coated Aluminium Fins	
Cooling/Dehum Stages			2/1	2/1
Condenser			Stainless Steel Brazed Plate	
Water Volume		l	2.5	2.5
Evaporator Fan				
Motor - AC Motor			Centrifugal Forward Curved AC - Designed To 25Pa ESP	
Fan Transmission Type			Direct Drive	
Quantity			2	2
Motor Shaft Power	(4)	kW	N/A	N/A
Maximum ESP		Pa	203	55
Nominal Airflow		m³/s	1.70	2.00
Compressor - Scroll			Tandem	
Quantity			2	2
Oil Charge Volume (Total)		l	2.40	2.40
Oil Type			Polyol Ester	
Refrigeration			Single Circuit	
Charge (Total)		kg	3.2	3.2
Connections				
Water Inlet / Outlet		mm	28	28
Condensate Drain Hose		mm	19	19
Filtration			Disposable To ISO16890-ISO-C-75 - 50mm	
Quantity			3	3
OPTIONAL EXTRAS				
Electric Heating (Total)		kW	15.0	15.0
Humidifier				
Capacity		kg/hr	0.6 - 3.0	0.6 - 3.0
Feed/Drain			3/4” BSPF Braided Flexible Hose / 19mm Hose Connection	
Condensate Pump				
Head		m	8	8
Flow		l/m	5	5
Drain			10mm Stainless Steel Stub Connection	
Optional Fan - EC Motor			Centrifugal Backward Curved EC - Designed To 25Pa ESP	
Fan Transmission Type			Direct Drive	
Quantity			1	1
Motor Shaft Power	(4)	kW	N/A	N/A
Speed @ 25Pa / Maximum ESP		rpm	1830 / 2165	2165 / 2165
Maximum ESP		Pa	285	25
Low Pressure Hot Water	(7)		Copper Tube / Aluminium Fin	
Capacity Gross		kW	19.2	19.9
Water Flow (Nominal)		l/s	0.43	0.44
LPHW Connection Sizes		mm	22	22
Threaded Connection				
Brass Male Taper		in	1	1

Technical Data Upflow Units WX Type V20WX2- V26WX2

Electrical Data

		V20WX2-EZRE-2	V22WX2-EZRE-2
Unit Data Full Function - WX			
Nominal Run Amps	A	88.4	88.4
Maximum Start Amps	A	193.5	193.5
Recommended Mains Fuse Size	A	100	100
Unit Data Cooling Only - WX			
Nominal Run Amps	A	49.1	49.1
Maximum Start Amps	A	154.1	154.1
Recommended Mains Fuse Size	A	63	63
Max Mains Incoming Cable Size	mm²	35	35
Mains Supply	V	220V / 3PH / 60HZ	
Control Circuit	VAC	24	24
Evaporator Fan - Motor Per Fan			
Electrical Input Power	kW	2.2	2.2
Full Load Amps	A	9.6	9.6
Locked Rotor Amps	A	24	24
Compressor - Per Compressor			
Quantity x Motor Size	kW	2 x 5.16	2 x 5.16
Nominal Run Amps	A	14.9	14.9
Locked Rotor Amps	A	120	120
Type of Start			
Standard Condenser Match - AC Motor - Per Fan			
Electrical Input Power	kW	0.64	0.64
Full Load Amps	A	3.02	3.02
OPTIONAL EXTRAS			
Electric Heating			
Stage of Reheat		2	2
Number of Elements		6	6
Rating	kW	15	15
Curent per Phase	A	39.36	39.36
Humidifier			
Capacity	kg/hr	3	3
Rating	kW	2.25	2.25
Full Load Amps	A	5.90	5.90
Evaporator Fan Options Larger Fan Motor - AC Motor - Per Fan			
Electrical Input Power	kW	N/A	N/A
Full Load Amps	A	N/A	N/A
Locked Rotor Amps	A	N/A	N/A
Standard Size Motor - EC Motor - Per Fan			
Electrical Input Power	kW	2.63	2.63
Full Load Amps	A	9.8	9.8
Condenser Fan Options Standard Condenser Motor - EC Motor - Per Fan			
Electrical Input Power	kW	0.73	0.73
Full Load Amps	A	3.3	3.3

Mechanical

(1) Entering air 24°C/45% RH condenser water in / out: 30°C/35°C.
(2) Fan Gain / Fan power input based upon fan operating with design airflow at 25Pa ESP, These values may change with different ESP.
(3) With Standard forward curved fan motors; Machine weight includes a refrigerant charge /Operating weight includes calculated water volume.
(4) Backward curved EC fan options quote electrical power. All other options quote shaft power.
(5) For refrigerant charges, refer to ***Unit Refrigerant Charge (kg/Circuit)***.
(6) Based on air temperature of 15.5°C leaving the evaporator coil.
(7) Based upon low pressure hot water 82°C inlet / 71°C outlet. Air on 20°C. Refer to ***Low Pressure Hot Water (Optional Extra) - X & WX Models***.

Electrical

(1) Values given for full function units (incl. electric heating, humidification and matched condenser) at 7°C evaporating and 54.4°C condensing with standard forward curved fan motors, for optional data, please contact Airedale.
(2) Values given for Cooling only units (incl. Compressor, evaporator fan and matched condenser) at 7°C evaporating and 54.4°C condensing, for optional data, please contact Airedale.
(3) Electrical input power relates to the maximum absorbed electrical power. Actual operating fan power input is shown in the mechanical data tables.

Technical Data Upflow Units WX Type V28WX - V31WX2

Mechanical Data

			V28WX-EZRE-2	V31WX-EZRE-2	V31WX2-EZRE-2
Capacity	(1)				
Nominal Cooling		kW	27.7	32.0	31.9
Total Heat of Rejection		kW	36.7	42.7	42.4
Capacity Steps			1	1	2
Dimensions - W x D x H		mm	1460 x 750 x 1940	1460 x 750 x 1940	1460 x 750 x 1940
Weight	(3)	kg	468 / 474	468 / 474	500 / 506
Construction Material/Colour			Panels: Galvanised Sheet Steel, Epoxy Baked Powder Paint - Black, (RAL7021) Frame: Aluminium Frame With Aluminium Corners		
Evaporator			Rifled Copper Tube / Turbulated Hydrophilic Coated Aluminium Fins		
Cooling/Dehum Stages			1/1	1/1	2/1
Condenser			Stainless Steel Brazed Plate		
Water Volume		l	6.1	6.1	6.1
Evaporator Fan Motor - AC Motor			Centrifugal Forward Curved AC - Designed To 25Pa ESP		
Fan Transmission Type			Belt & Pulley		
Quantity			1	1	1
Motor Shaft Power	(4)	kW	3.0	4.0	4.0
Speed @ 25Pa / Maximum ESP		rpm	1420 / 1552	1600 / 1612	1600 / 1612
Maximum ESP		Pa	160	35	35
Nominal Airflow		m^3/s	2.40	2.80	2.80
Compressor - Scroll			Single	Single	Tandem
Quantity			1	1	2
Oil Charge Volume (Total)		l	3.30	3.30	3.32
Oil Type			Polyol Ester		
Refrigeration			Single Circuit		
Charge (Total)		kg	5.3	5.3	5.2
Connections					
Water Inlet / Outlet		mm	35	35	35
Condensate Drain Hose		mm	19	19	19
Filtration			Disposable To ISO16890-ISO-C-75 - 75mm		
Quantity			3	3	3
OPTIONAL EXTRAS					
Electric Heating (Total)		kW	22.5	22.5	22.5
Humidifier					
Capacity		kg/hr	1.6 - 8.0	1.6 - 8.0	1.6 - 8.0
Feed/Drain			3/4" BSPF Braided Flexible Hose / 19mm Hose Connection		
Condensate Pump					
Head		m	5	5	5
Flow		l/m	10.8	10.8	10.8
Drain			10mm Stainless Steel Stub Connection		
Evaporator Fan Options:					
Larger Fan Motor - AC Motor			Centrifugal Forward Curved AC - Designed to 25Pa ESP		
Fan Transmission Type			Belt & Pulley		
Quantity			1	N/A	N/A
Motor Shaft Power	(4)	kW	4.0	N/A	N/A
Speed @ Maximum ESP		rpm	1910	N/A	N/A
Maximum ESP		Pa	470	N/A	N/A
Optional Fan - EC Motor			Centrifugal Backward Curved EC - Designed To 25Pa ESP		
Fan Transmission Type			Direct Drive		
Quantity			2	2	2
Motor Shaft Power	(4)	kW	N/A	N/A	N/A
Speed @ 25Pa / Maximum ESP		rpm	1700 / 2165	1935 / 2165	1935 / 2165
Maximum ESP		Pa	440	225	225
Low Pressure Hot Water	(7)		Copper Tube / Aluminium Fin		
Capacity Gross		kW	21.7	23.2	23.2
Water Flow (Nominal)		l/s	0.48	0.52	0.52
LPHW Connection Sizes		mm	22	22	22
Threaded Connection					
Brass Male Taper		in	1 1/4	1 1/4	1 1/4

Technical Data Upflow Units WX Type V28WX - V31WX2

Electrical Data

		V28WX-EZRE-2	V31WX-EZRE-2	V31WX2-EZRE-2
Unit Data Full Function - WX				
Nominal Run Amps	A	102.2	111.1	110.6
Maximum Start Amps	A	273.7	344.0	215.3
Recommended Mains Fuse Size	A	125	125	125
Unit Data Cooling Only - WX				
Nominal Run Amps	A	43.1	52.1	51.6
Maximum Start Amps	A	214.6	285.0	156.3
Recommended Mains Fuse Size	A	63	63	63
Max Mains Incoming Cable Size	mm²	50	50	50
Mains Supply	V		220V / 3PH / 60HZ	
Control Circuit	VAC	24	24	24
Evaporator Fan - Motor Per Fan				
Electrical Input Power	kW	3.5	4.6	4.6
Full Load Amps	A	11.14	14.45	14.45
Locked Rotor Amps	A	77.98	101.15	101.15
Compressor - Per Compressor				
Quantity x Motor Size	kW	1 x 10.79	1 x 12.36	2 x 6.57
Nominal Run Amps	A	31.48	37.12	18.3
Locked Rotor Amps	A	203	270	123
Type of Start				
Standard Condenser Match - AC Motor - Per Fan				
Electrical Input Power	kW	0.64	0.64	0.64
Full Load Amps	A	3.02	3.02	3.02
OPTIONAL EXTRAS				
Electric Heating				
Stage of Reheat		3	3	3
Number of Elements		9	9	9
Rating	kW	22.5	22.5	22.5
Curent per Phase	A	59.05	59.05	59.05
Humidifier				
Capacity	kg/hr	8	8	8
Rating	kW	6.00	6.00	6.00
Full Load Amps	A	15.75	15.75	15.75
Evaporator Fan Options Larger Fan Motor - AC Motor - Per Fan				
Electrical Input Power	kW	4.6	N/A	N/A
Full Load Amps	A	14.45	N/A	N/A
Locked Rotor Amps	A	101.15	N/A	N/A
Standard Size Motor - EC Motor - Per Fan				
Electrical Input Power	kW	2.63	2.63	2.63
Full Load Amps	A	9.8	9.8	9.8
Condenser Fan Options Standard Condenser Motor - EC Motor - Per Fan				
Electrical Input Power	kW	0.73	0.73	0.73
Full Load Amps	A	3.3	3.3	3.3

Mechanical

(1) Entering air 24°C/45% RH condenser water in / out: 30°C/35°C.
(2) Fan Gain / Fan power input based upon fan operating with design airflow at 25Pa ESP, These values may change with different ESP.
(3) With Standard forward curved fan motors; Machine weight includes a refrigerant charge /Operating weight includes calculated water volume.
(4) Backward curved EC fan options quote electrical power. All other options quote shaft power.
(5) For refrigerant charges, refer to ***Unit Refrigerant Charge (kg/Circuit)***.
(6) Based on air temperature of 15.5°C leaving the evaporator coil.
(7) Based upon low pressure hot water 82°C inlet / 71°C outlet. Air on 20°C. Refer to ***Low Pressure Hot Water (Optional Extra) - X & WX Models***.

Electrical

(1) Values given for full function units (incl. electric heating, humidification and matched condenser) at 7°C evaporating and 54.4°C condensing with standard forward curved fan motors, for optional data, please contact Airedale.
(2) Values given for Cooling only units (incl. Compressor, evaporator fan and matched condenser) at 7°C evaporating and 54.4°C condensing, for optional data, please contact Airedale.
(3) Electrical input power relates to the maximum absorbed electrical power. Actual operating fan power input is shown in the mechanical data tables.

Technical Data Upflow Units WX Type V35WX - V35WX2

Mechanical Data

			V35WX-EZRE-2	V35WX2-EZRE-2
Capacity	(1)			
Nominal Cooling		kW	37.3	39.6
Total Heat of Rejection		kW	49.5	52.6
Capacity Steps			1	2
Dimensions - W x D x H		mm	1835 x 750 x 1940	1835 x 750 x 1940
Weight	(3)	kg	534 / 540	576 / 582
Construction			Panels: Galvanised Sheet Steel, Epoxy Baked Powder Paint - Black, (RAL7021)	
Material/Colour			Frame: Aluminium Frame With Aluminium Corners	
Evaporator			Rifled Copper Tube / Turbulated Hydrophilic Coated Aluminium Fins	
Cooling/Dehum Stages			1/1	2/1
Condenser			Stainless Steel Brazed Plate	
Water Volume		l	6.1	6.1
Evaporator Fan				
Motor - AC Motor			Centrifugal Forward Curved AC - Designed To 25Pa ESP	
Fan Transmission Type			Belt & Pulley	
Quantity			1	1
Motor Shaft Power	(4)	kW	4.0	4.0
Speed @ 25Pa / Maximum ESP		rpm	1440 / 1468	1440 / 1468
Maximum ESP		Pa	35	35
Nominal Airflow		m^3/s	3.30	3.30
Compressor - Scroll			Single	Tandem
Quantity			1	2
Oil Charge Volume (Total)		l	3.30	3.32
Oil Type			Polyol Ester	
Refrigeration			Single Circuit	
Charge (Total)		kg	6.0	5.9
Connections				
Water Inlet / Outlet		mm	35	35
Condensate Drain Hose		mm	19	19
Filtration			Disposable To ISO16890-ISO-C-75 - 75mm	
Quantity			4	4
OPTIONAL EXTRAS				
Electric Heating (Total)		kW	30.0	30.0
Humidifier				
Capacity		kg/hr	3.0 - 15.0	3.0 - 15.0
Feed/Drain			3/4" BSPF Braided Flexible Hose / 19mm Hose Connection	
Condensate Pump				
Head		m	5	5
Flow		l/m	10.8	10.8
Drain			10mm Stainless Steel Stub Connection	
Evaporator Fan Options:				
Larger Fan Motor - AC Motor			Centrifugal Forward Curved AC - Designed to 25Pa ESP	
Fan Transmission Type			Belt & Pulley	
Quantity			1	1
Motor Shaft Power	(4)	kW	5.5	5.5
Speed @ Maximum ESP		rpm	1695	1695
Maximum ESP		Pa	240	240
Optional Fan - EC Motor			Centrifugal Backward Curved EC - Designed To 25Pa ESP	
Fan Transmission Type			Direct Drive	
Quantity			2	2
Motor Shaft Power	(4)	kW	N/A	N/A
Speed @ 25Pa / Maximum ESP		rpm	1935 / 2165	1935 / 2165
Maximum ESP		Pa	260	260
Low Pressure Hot Water	(7)		Copper Tube / Aluminium Fin	
Capacity Gross		kW	29.9	29.9
Water Flow (Nominal)		l/s	0.67	0.67
LPHW Connection Sizes		mm	22	22
Threaded Connection				
Brass Male Taper		in	1 1/4	1 1/4

Technical Data Upflow Units WX Type V35WX - V35WX2

Electrical Data

		V35WX-EZRE-2	V35WX2-EZRE-2
Unit Data Full Function - WX			
Nominal Run Amps	A	133.8	137.5
Maximum Start Amps	A	360.7	275.6
Recommended Mains Fuse Size	A	160	160
Unit Data Cooling Only - WX			
Nominal Run Amps	A	55.1	58.8
Maximum Start Amps	A	282.0	196.9
Recommended Mains Fuse Size	A	80	80
Max Mains Incoming Cable Size	mm²	95	95
Mains Supply	V	220V / 3PH / 60HZ	
Control Circuit	VAC	24	24
Evaporator Fan - Motor Per Fan			
Electrical Input Power	kW	4.6	4.6
Full Load Amps	A	14.45	14.45
Locked Rotor Amps	A	101.15	101.15
Compressor - Per Compressor			
Quantity x Motor Size	kW	1 x 13.98	2 x 7.82
Nominal Run Amps	A	40.11	21.9
Locked Rotor Amps	A	267	160
Type of Start			
Standard Condenser Match - AC Motor - Per Fan			
Electrical Input Power	kW	0.64	0.64
Full Load Amps	A	3.02	3.02
OPTIONAL EXTRAS			
Electric Heating			
Stage of Reheat		3	3
Number of Elements		12	12
Rating	kW	30	30
Curent per Phase	A	78.73	78.73
Humidifier			
Capacity	kg/hr	15	15
Rating	kW	11.25	11.25
Full Load Amps	A	29.52	29.52
Evaporator Fan Options Larger Fan Motor - AC Motor - Per Fan			
Electrical Input Power	kW	6.3	6.3
Full Load Amps	A	25.63	25.63
Locked Rotor Amps	A	197.35	197.35
Standard Size Motor - EC Motor - Per Fan			
Electrical Input Power	kW	2.63	2.63
Full Load Amps	A	9.8	9.8
Condenser Fan Options Standard Condenser Motor - EC Motor - Per Fan			
Electrical Input Power	kW	0.73	0.73
Full Load Amps	A	3.3	3.3

Mechanical

(1) Entering air 24°C/45% RH condenser water in / out: 30°C/35°C.
(2) Fan Gain / Fan power input based upon fan operating with design airflow at 25Pa ESP, These values may change with different ESP.
(3) With Standard forward curved fan motors; Machine weight includes a refrigerant charge /Operating weight includes calculated water volume.
(4) Backward curved EC fan options quote electrical power. All other options quote shaft power.
(5) For refrigerant charges, refer to ***Unit Refrigerant Charge (kg/Circuit)***.
(6) Based on air temperature of 15.5°C leaving the evaporator coil.
(7) Based upon low pressure hot water 82°C inlet / 71°C outlet. Air on 20°C. Refer to ***Low Pressure Hot Water (Optional Extra) - X & WX Models***.

Electrical

(1) Values given for full function units (incl. electric heating, humidification and matched condenser) at 7°C evaporating and 54.4°C condensing with standard forward curved fan motors, for optional data, please contact Airedale.
(2) Values given for Cooling only units (incl. Compressor, evaporator fan and matched condenser) at 7°C evaporating and 54.4°C condensing, for optional data, please contact Airedale.
(3) Electrical input power relates to the maximum absorbed electrical power. Actual operating fan power input is shown in the mechanical data tables.

Technical Data Upflow Units WX Type V40WX - V45WX2

Mechanical Data

			V40WX-EZRE-2	V40WX2-EZRE-2	V45WX2-EZRE-2
Capacity	(1)				
Nominal Cooling		kW	42.2	45.2	51.6
Total Heat of Rejection		kW	56.1	59.2	67.7
Capacity Steps			1	2	2
Dimensions - W x D x H		mm	1835 x 750 x 1940	1835 x 750 x 1940	1835 x 750 x 1940
Weight	(3)	kg	562 / 568	589 / 595	620 / 630
Construction			Panels: Galvanised Sheet Steel, Epoxy Baked Powder Paint - Black, (RAL7021)		
Material/Colour			Frame: Aluminium Frame With Aluminium Corners		
Evaporator			Rifled Copper Tube / Turbulated Hydrophilic Coated Aluminium Fins		
Cooling/Dehum Stages			1/1	2/1	2/1
Condenser			Stainless Steel Brazed Plate		
Water Volume		l	6.1	6.1	9.9
Evaporator Fan					
Motor - AC Motor			Centrifugal Forward Curved AC - Designed To 25Pa ESP		
Fan Transmission Type			Belt & Pulley		
Quantity			1	1	1
Motor Shaft Power	(4)	kW	5.5	5.5	5.5
Speed @ 25Pa / Maximum ESP		rpm	1620 / 1622	1620 / 1622	1620 / 1622
Maximum ESP		Pa	25	25	25
Nominal Airflow		m^3/s	3.70	3.70	3.70
Compressor - Scroll			Single	Tandem	
Quantity			1	2	2
Oil Charge Volume (Total)		l	3.30	3.78	3.44
Oil Type			Polyol Ester		
Refrigeration			Single Circuit		
Charge (Total)		kg	6.0	6.1	8.7
Connections					
Water Inlet / Outlet		mm	35	35	42
Condensate Drain Hose		mm	19	19	19
Filtration			Disposable To ISO16890-ISO-C-75 - 75mm		
Quantity			4	4	4
OPTIONAL EXTRAS					
Electric Heating (Total)		kW	30.0	30.0	30.0
Humidifier					
Capacity		kg/hr	3.0 - 15.0	3.0 - 15.0	3.0 - 15.0
Feed/Drain			3/4" BSPF Braided Flexible Hose / 19mm Hose Connection		
Condensate Pump					
Head		m	5	5	5
Flow		l/m	10.8	10.8	10.8
Drain			10mm Stainless Steel Stub Connection		
Evaporator Fan Options:					
Larger Fan Motor - AC Motor			Centrifugal Forward Curved AC - Designed to 25Pa ESP		
Fan Transmission Type			Belt & Pulley		
Quantity			N/A	N/A	N/A
Motor Shaft Power	(4)	kW	N/A	N/A	N/A
Speed @ Maximum ESP		rpm	N/A	N/A	N/A
Maximum ESP		Pa	N/A	N/A	N/A
Optional Fan - EC Motor			Centrifugal Backward Curved EC - Designed To 25Pa ESP		
Fan Transmission Type			Direct Drive		
Quantity			2	2	2
Motor Shaft Power	(4)	kW	N/A	N/A	N/A
Speed @ 25Pa / Maximum ESP		rpm	2165 / 2165	2165 / 2165	2165 / 2165
Maximum ESP		Pa	25	25	25
Low Pressure Hot Water	(7)		Copper Tube / Aluminium Fin		
Capacity Gross		kW	31.5	31.5	31.5
Water Flow (Nominal)		l/s	0.70	0.70	0.70
LPHW Connection Sizes		mm	22	22	22
Threaded Connection					
Brass Male Taper		in	1 1/4	1 1/4	1 1/2

Technical Data Upflow Units WX Type V40WX - V45WX2

Electrical Data

		V40WX-EZRE-2	V40WX2-EZRE-2	V45WX2-EZRE-2
Unit Data Full Function - WX				
Nominal Run Amps	A	146.4	145.4	152.9
Maximum Start Amps	A	403.7	312.5	316.3
Recommended Mains Fuse Size	A	160	160	200
Unit Data Cooling Only - WX				
Nominal Run Amps	A	67.7	66.7	74.2
Maximum Start Amps	A	325.0	233.8	237.6
Recommended Mains Fuse Size	A	80	80	100
Max Mains Incoming Cable Size	mm²	185	95	185
Mains Supply	V		220V / 3PH / 60HZ	
Control Circuit	VAC	24	24	24
Evaporator Fan - Motor Per Fan				
Electrical Input Power	kW	5.5	5.5	5.5
Full Load Amps	A	20.46	20.46	20.46
Locked Rotor Amps	A	157.5	157.5	157.5
Compressor - Per Compressor				
Quantity x Motor Size	kW	1 x 16.07	2 x 8.26	2 x 9.19
Nominal Run Amps	A	46.72	22.9	26.6
Locked Rotor Amps	A	304	190	190
Type of Start				
Standard Condenser Match - AC Motor - Per Fan				
Electrical Input Power	kW	0.64	0.64	0.64
Full Load Amps	A	3.02	3.02	3.02
OPTIONAL EXTRAS				
Electric Heating				
Stage of Reheat		3	3	3
Number of Elements		12	12	12
Rating	kW	30	30	30
Curent per Phase	A	78.73	78.73	78.73
Humidifier				
Capacity	kg/hr	15	15	15
Rating	kW	11.25	11.25	11.25
Full Load Amps	A	29.52	29.52	29.52
Evaporator Fan Options Larger Fan Motor - AC Motor - Per Fan				
Electrical Input Power	kW	N/A	N/A	N/A
Full Load Amps	A	N/A	N/A	N/A
Locked Rotor Amps	A	N/A	N/A	N/A
Standard Size Motor - EC Motor - Per Fan				
Electrical Input Power	kW	2.63	2.63	2.63
Full Load Amps	A	9.8	9.8	9.8
Condenser Fan Options Standard Condenser Motor - EC Motor - Per Fan				
Electrical Input Power	kW	0.73	0.73	0.73
Full Load Amps	A	3.3	3.3	3.3

Mechanical

(1) Entering air 24°C/45% RH condenser water in / out: 30°C/35°C.
(2) Fan Gain / Fan power input based upon fan operating with design airflow at 25Pa ESP, These values may change with different ESP.
(3) With Standard forward curved fan motors; Machine weight includes a refrigerant charge /Operating weight includes calculated water volume.
(4) Backward curved EC fan options quote electrical power. All other options quote shaft power.
(5) For refrigerant charges, refer to ***Unit Refrigerant Charge (kg/Circuit)***.
(6) Based on air temperature of 15.5°C leaving the evaporator coil.
(7) Based upon low pressure hot water 82°C inlet / 71°C outlet. Air on 20°C. Refer to ***Low Pressure Hot Water (Optional Extra) - X & WX Models***.

Electrical

(1) Values given for full function units (incl. electric heating, humidification and matched condenser) at 7°C evaporating and 54.4°C condensing with standard forward curved fan motors, for optional data, please contact Airedale.
(2) Values given for Cooling only units (incl. Compressor, evaporator fan and matched condenser) at 7°C evaporating and 54.4°C condensing, for optional data, please contact Airedale.
(3) Electrical input power relates to the maximum absorbed electrical power. Actual operating fan power input is shown in the mechanical data tables.

Technical Data Downflow Units X Type V50WX2 - V60WX2

Mechanical Data

			V50WX2-EZRE-2	V55WX2-EZRE-2	V60WX2-EZRE-2
Capacity	(1)				
Nominal Cooling		kW	53.6	61.6	69.8
Total Heat of Rejection		kW	71.6	82.8	93.7
Capacity Steps			2	2	2
Dimensions - W x D x H		mm	2170 x 750 x 1940	2170 x 750 x 1940	2170 x 750 x 1940
Weight	(3)	kg	709 / 719	729 / 739	733 / 743
Construction			Panels: Galvanised Sheet Steel, Epoxy Baked Powder Paint - Black, (RAL7021)		
Material/Colour			Frame: Aluminium Frame With Aluminium Corners		
Evaporator			Rifled Copper Tube / Turbulated Hydrophilic Coated Aluminium Fins		
Cooling/Dehum Stages			2/1	2/1	2/1
Condenser			Stainless Steel Brazed Plate		
Water Volume		l	9.9	9.9	9.9
Evaporator Fan					
Motor - AC Motor			Centrifugal Forward Curved AC - Designed To 25Pa ESP		
Fan Transmission Type			Belt & Pulley		
Quantity			2	2	2
Motor Shaft Power	(4)	kW	3.0	3.0	3.0
Speed @ 25Pa / Maximum ESP		rpm	1243 / 1447	1243 / 1447	1278 / 1324
Maximum ESP		Pa	255	255	35
Nominal Airflow		m^3/s	4.20	4.20	4.60
Compressor - Scroll			Tandem		
Quantity			2	2	2
Oil Charge Volume (Total)		l	6.60	6.60	6.60
Oil Type			Polyol Ester		
Refrigeration			Single Circuit		
Charge (Total)		kg	8.9	9.7	9.8
Connections					
Water Inlet / Outlet		mm	42	42	42
Condensate Drain Hose		mm	19	19	19
Filtration			Disposable To ISO16890-ISO-C-75 - 75mm		
Quantity			5	5	5
OPTIONAL EXTRAS					
Electric Heating (Total)		kW	30.0	30.0	30.0
Humidifier					
Capacity		kg/hr	3.0 - 15.0	3.0 - 15.0	3.0 - 15.0
Feed/Drain			3/4" BSPF Braided Flexible Hose / 19mm Hose Connection		
Condensate Pump					
Head		m	5	5	5
Flow		l/m	10.8	10.8	10.8
Drain			10mm Stainless Steel Stub Connection		
Evaporator Fan Options:					
Larger Fan Motor - AC Motor			Centrifugal Forward Curved AC - Designed to 25Pa ESP		
Fan Transmission Type			Belt & Pulley		
Quantity			2	2	2
Motor Shaft Power	(4)	kW	4.0	4.0	4.0
Speed @ Maximum ESP		rpm	1495	1495	1499
Maximum ESP		Pa	305	305	230
Optional Fan - EC Motor			Centrifugal Backward Curved EC - Designed To 25Pa ESP		
Fan Transmission Type			Direct Drive		
Quantity			2	2	2
Motor Shaft Power	(4)	kW	N/A	N/A	N/A
Speed @ 25Pa / Maximum ESP		rpm	1370 / 1510	1370 / 1510	1510 / 1510
Maximum ESP		Pa	165	165	25
Low Pressure Hot Water	(7)		Copper Tube / Aluminium Fin		
Capacity Gross		kW	37.7	37.7	39.2
Water Flow (Nominal)		l/s	0.84	0.84	0.87
LPHW Connection Sizes		mm	22	22	22
Threaded Connection					
Brass Male Taper		in	1 1/2	1 1/2	1 1/2

Technical Data Downflow Units X Type V50WX2 - V60WX2

Electrical Data

		V50WX2-EZRE-2	V55WX2-EZRE-2	V60WX2-EZRE-2
Unit Data Full Function - WX				
Nominal Run Amps	A	164.5	175.7	181.7
Maximum Start Amps	A	336.0	408.6	408.6
Recommended Mains Fuse Size	A	200	200	200
Unit Data Cooling Only - WX				
Nominal Run Amps	A	85.7	97.0	103.0
Maximum Start Amps	A	257.3	329.9	329.9
Recommended Mains Fuse Size	A	100	125	125
Max Mains Incoming Cable Size	mm²	185	185	185
Mains Supply	V		220V / 3PH / 60HZ	
Control Circuit	VAC	24	24	24
Evaporator Fan - Motor Per Fan				
Electrical Input Power	kW	3.5	3.5	3.5
Full Load Amps	A	11.14	11.14	11.14
Locked Rotor Amps	A	77.98	77.98	77.98
Compressor - Per Compressor				
Quantity x Motor Size	kW	2 x 10.79	2 x 12.36	2 x 13.98
Nominal Run Amps	A	31.48	37.12	40.11
Locked Rotor Amps	A	203	270	267
Type of Start				
Standard Condenser Match - AC Motor - Per Fan				
Electrical Input Power	kW	0.64	0.64	0.64
Full Load Amps	A	3.02	3.02	3.02
OPTIONAL EXTRAS				
Electric Heating				
Stage of Reheat		3	3	3
Number of Elements		12	12	12
Rating	kW	30	30	30
Curent per Phase	A	78.73	78.73	78.73
Humidifier				
Capacity	kg/hr	15	15	15
Rating	kW	11.25	11.25	11.25
Full Load Amps	A	29.52	29.52	29.52
Evaporator Fan Options Larger Fan Motor - AC Motor - Per Fan				
Electrical Input Power	kW	4.6	4.6	4.6
Full Load Amps	A	14.45	14.45	14.45
Locked Rotor Amps	A	101.15	101.15	101.15
Standard Size Motor - EC Motor - Per Fan				
Electrical Input Power	kW	2.9	2.9	2.9
Full Load Amps	A	9.2	9.2	9.2
Condenser Fan Options Standard Condenser Motor - EC Motor - Per Fan				
Electrical Input Power	kW	0.73	0.73	0.73
Full Load Amps	A	3.3	3.3	3.3

Mechanical

(1) Entering air 24°C/45% RH condenser water in / out: 30°C/35°C.
(2) Fan Gain / Fan power input based upon fan operating with design airflow at 25Pa ESP, These values may change with different ESP.
(3) With Standard forward curved fan motors; Machine weight includes a refrigerant charge /Operating weight includes calculated water volume.
(4) Backward curved EC fan options quote electrical power. All other options quote shaft power.
(5) For refrigerant charges, refer to ***Unit Refrigerant Charge (kg/Circuit)***.
(6) Based on air temperature of 15.5°C leaving the evaporator coil.
(7) Based upon low pressure hot water 82°C inlet / 71°C outlet. Air on 20°C. Refer to ***Low Pressure Hot Water (Optional Extra) - X & WX Models***.

Electrical

(1) Values given for full function units (incl. electric heating, humidification and matched condenser) at 7°C evaporating and 54.4°C condensing with standard forward curved fan motors, for optional data, please contact Airedale.
(2) Values given for Cooling only units (incl. Compressor, evaporator fan and matched condenser) at 7°C evaporating and 54.4°C condensing, for optional data, please contact Airedale.
(3) Electrical input power relates to the maximum absorbed electrical power. Actual operating fan power input is shown in the mechanical data tables.

After Sales

Warranty

All Airedale products or parts (non consumable) supplied for installation within the UK mainland and commissioned by an Airedale engineer, carry a full Parts & Labour warranty for a period of 12 months from the date of commissioning or 18 months from the date of despatch, whichever is the sooner.

Parts or Equipment supplied by Airedale for installation within the UK or for Export that are properly commissioned in accordance with Airedale standards and specification, not commissioned by an Airedale engineer; carry a 12 month warranty on non consumable Parts only from the date of commissioning or 18 months from the date of despatch, whichever is the sooner.

Parts or equipment installed or commissioned not to acceptable Airedale standards or specification invalidate all warranty.

Warranty is only valid in the event that

In the period between delivery and commissioning the equipment:

- is properly protected & serviced as per the Airedale installation & maintenance manual provided
- where applicable the glycol content is maintained to the correct level.

In the event of a problem being reported and once warranty is confirmed* as valid under the given installation and operating conditions, the Company will provide the appropriate warranty coverage (as detailed above) attributable to the rectification of any affected Airedale equipment supplied (excluding costs for any specialist access or lifting equipment that must be ordered by the customer).

*Once warranty is confirmed, maintenance must be continued to validate the warranty period.

Any spare part supplied by Airedale under warranty shall be warranted for the unexpired period of the warranty or 3 months from delivery, whichever period is the longer. To be read in conjunction with the Airedale Conditions of Sale - Warranty and Warranty Procedure, available upon request.

Procedure

When a component part fails, a replacement part should be obtained through our Spares department. If the part is considered to be under warranty, the following details are required to process this requirement. Full description of part required, including Airedale's part number, if known. The original equipment serial number. An appropriate purchase order number.

A spares order will be raised under our warranty system and the replacement part will be despatched, usually within 24 hours should they be in stock. When replaced, the faulty part must be returned to Airedale with a suitably completed and securely attached "Faulty Component Return" (FCR) tag. FCR tags are available from Airedale and supplied with each Warranty order.

On receipt of the faulty part, suitably tagged, Airedale will pass to its Warranty department, where it will be fully inspected and tested in order to identify the reason for failure, identifying at the same time whether warranty is justified or not.

On completion of the investigation of the returned part, a full "Report on Goods Returned" will be issued. On occasion the release of this complete report may be delayed as component manufacturers become involved in the investigation. When warranty is allowed, a credit against the Warranty invoice will be raised. Should warranty be refused the Warranty invoice becomes payable on normal terms.

Exclusions

Warranty may be refused for the following reasons.

- Misapplication of product or component
- Incorrect site installation
- Incomplete commissioning documentation
- Inadequate site installation
- Inadequate site maintenance
- Damage caused by mishandling
- Replaced part being returned damaged without explanation
- Unnecessary delays incurred in return of defective component

Returns analysis

All faulty components returned under warranty are analysed on a monthly basis as a means of verifying component and product reliability as well as supplier performance. It is important that all component failures are reported correctly.

Head Office
Airedale International Air Conditioning Ltd
Leeds Road
Rawdon
Leeds LS19 6JY
Tel: +44 (0) 113 2391000
Fax:+44 (0) 113 2507219
E-mail enquiries@airedale.com
Web www.airedale.com