TurboChill™

200kW to 1700kW

Air Cooled (TCC) and FreeCool (TCF) Chiller
R134a

Technical Manual
Original Instructions

ecoDesign COMPLIANT

ISO 9001 Quality Management — FM00542

ISO 14001 Environmental Management — EMS52086

Warranty, Commissioning & Maintenance

As standard, Airedale guarantees all non consumable parts only for a period of 12 months, variations tailored to suit product and application are also available; please contact Airedale for full terms and details.

To further protect your investment in Airedale products, Airedale can provide full commissioning services, comprehensive maintenance packages and service cover 24 hours a day, 365 days a year (UK mainland).

For a free quotation contact Airedale or your local Sales Engineer.

All Airedale products are designed in accordance with EU Directives regarding prevention of build up of water, associated with the risk of contaminants such as Legionella.

For effective prevention of such risk it is necessary that the equipment is maintained in accordance with Airedale recommendations.

ChillerGuard™

In addition to commissioning, a 24 hour, 7 days a week on-call service is available throughout the year to UK mainland sites. This service will enable customers to contact a duty engineer outside normal working hours and receive assistance over the telephone. The duty engineer can, if necessary, attend site, usually within 24 hours or less.

Full details will be forwarded on acceptance of the maintenance agreement.

Spares

A spares list for 1, 3 and 5 years will be supplied with every unit and is also available from our Spares department on request.

CAUTION ⚠	Warranty cover is not a substitute for maintenance. Warranty cover is conditional to maintenance being carried out in accordance with the recommendations provided during the warranty period. Failure to have the maintenance procedures carried out will invalidate the warranty and any liabilities by Airedale International Air Conditioning Ltd.

Training

As well as our comprehensive range of products, Airedale offers a modular range of Refrigeration and Air Conditioning Training courses, for further information please contact Airedale.

Customer Services

For further assistance, please e-mail: connect@airedale.com or telephone:

UK Sales Enquiries	+ 44 (0) 113 239 1000	connect@airedale.com
International Enquiries	+ 44 (0) 113 239 1000	connect@airedale.com
Spares Hot Line	+ 44 (0) 113 238 7878	spares@airedale.com
Airedale Service	+ 44 (0) 113 239 1000	service@airedale.com
Technical Support	+ 44 (0) 113 239 1000	tech.support@airedale.com
Training Enquiries	+ 44 (0) 113 239 1000	training@airedale.com

For information, visit us at our Web Site: www.airedale.com

Airedale Ltd. endeavours to ensure that the information in this document is correct and fairly stated, but none of the statements are to be relied upon as a statement or representation of fact. Airedale Ltd does not accept liability for any error or omission, or for any reliance placed on the information contained in this document. The development of Airedale products and services is continuous and the information in this document may not be up to date. It is important to check the current position with Airedale Ltd. at the address stated. This document is not part of a contract or licence unless expressly agreed. No part of this document may be reproduced or transmitted in any form or by any means, electronic or mechanical, including photocopying, recording, or information storage and retrieval systems, for any purpose other than the purchaser's personal use, without the express written permission of Airedale Ltd.
© 2019 Airedale International Air Conditioning Limited. All rights reserved. Printed in the UK.

Warranty

All Airedale products or parts (non consumable) supplied for installation within the UK mainland and commissioned by an Airedale engineer, carry a full Parts & Labour warranty for a period of 12 months from the date of commissioning or 18 months from the date of despatch, whichever is the sooner.

Parts or Equipment supplied by Airedale for installation within the UK or for Export that are properly commissioned in accordance with Airedale standards and specification, not commissioned by an Airedale engineer; carry a 12 month warranty on non consumable Parts only from the date of commissioning or 18 months from the date of despatch, whichever is the sooner.

Parts or equipment installed or commissioned not to acceptable Airedale standards or specification invalidate all warranty.

Warranty is only valid in the event that

In the period between delivery and commissioning the equipment,

- is properly protected & serviced as per the Airedale installation & maintenance manual provided
- where applicable the glycol content is maintained to the correct level.

In the event of a problem being reported and once warranty is confirmed as valid under the given installation and operating conditions, the Company will provide the appropriate warranty coverage (as detailed above) attributable to the rectification of any affected Airedale equipment supplied (excluding costs for any specialist access or lifting equipment that must be ordered by the customer).

Any spare part supplied by Airedale under warranty shall be warranted for the unexpired period of the warranty or 3 months from delivery, whichever period is the longer.

To be read in conjunction with the Airedale Conditions of Sale - Warranty and Warranty Procedure, available upon request.

Procedure

When a component part fails, a replacement part should be obtained through our Spares department. If the part is considered to be under warranty, the following details are required to process this requirement. Full description of part required, including Airedale's part number, if known. The original equipment serial number. An appropriate purchase order number.

A spares order will be raised under our warranty system and the replacement part will be despatched, usually within 24 hours should they be in stock. When replaced, the faulty part must be returned to Airedale with a suitably completed and securely attached "Faulty Component Return" (FCR) tag. FCR tags are available from Airedale and supplied with each Warranty order.

On receipt of the faulty part, suitably tagged, Airedale will pass to its Warranty department, where it will be fully inspected and tested in order to identify the reason for failure, identifying at the same time whether warranty is justified or not.

On completion of the investigation of the returned part, a full "Report on Goods Returned" will be issued. On occasion the release of this complete report may be delayed as component manufacturers become involved in the investigation.

When warranty is allowed, a credit against the Warranty invoice will be raised. Should warranty be refused the Warranty invoice becomes payable on normal terms.

Exclusions

Warranty may be refused for the following reasons:

- Misapplication of product or component.
- Incorrect site installation.
- Incomplete commissioning documentation.
- Inadequate site installation.
- Inadequate site maintenance.
- Damage caused by mishandling.
- Replaced part being returned damaged without explanation.
- Unnecessary delays incurred in return of defective component.

Returns Analysis

All faulty components returned under warranty are analysed on a monthly basis as a means of verifying component and product reliability as well as supplier performance. It is important that all component failures are reported correctly.

Health and Safety

IMPORTANT

The information contained in this manual is critical to the correct operation and maintenance of the unit and should be read by all persons responsible for the installation, commissioning and maintenance of this Airedale unit.

Safety

The equipment has been designed and manufactured to meet international safety standards but, like any mechanical / electrical equipment, care must be taken if you are to obtain the best results.

CAUTION ⚠	When working with any air conditioning units, ensure that the electrical isolator is switched off prior to servicing or repair work and that there is no power to any part of the equipment. Also ensure that there are no other power feeds to the unit such as fire alarm circuits, BMS circuits, crankcase heater permanent supplies etc. Electrical installation commissioning and maintenance work on this equipment should be undertaken by competent and trained personnel in accordance with local relevant standards and codes of practice. These Airedale chillers use R134a refrigerant which requires careful attention to proper storage and handling procedures in accordance with EN 378. Maximum water temperature flowing through the chiller should be 40°C.

Service Equipment

All service personnel must have refrigerant handling training.

Use only manifold gauge sets designed for use with refrigerants. Use only refrigerant recovery units and cylinders designed for the pressure category of the refrigerants.

The refrigerant used in this range of products is classified under the COSHH regulations as an irritant, with set Workplace Exposure Levels (WEL) for consideration if this plant is installed in confined or poorly ventilated areas.

A full hazard data sheet in accordance with COSHH regulations is available should this be required.

Refrigerants must only be charged in the liquid state.

The refrigerant must be stored in a clean, dry area away from sunlight. The refrigerant must never be stored above 50°C.

Global Warming Potential

The R134a refrigerant has a GWP of 1430, (Based on EN378-1:2016, 100 year life.

Pressure Equipment Directive

Minimum and Maximum Operation Temperature (TS) and Pressure (PS)

Refrigeration

AllowableTemperature Range (TS),	Min -20°C* to Max 120°C**
Maximum Allowable Pressure (PS)	High Side 18.8 Barg Low side 10.3 Barg

*Based on the refrigerant temperature in the unit off state in the lowest permitted ambient temperature.

**Based on the maximum allowable super heated refrigerant temperature.

Waterside

AllowableTemperature Range (TS)	Min -20°C* to Max 40°C**
Maximum Allowable Pressure (PS)	10.0 Barg

*Based on the waterside temperature in the unit off state in the lowest permitted ambient temperature.

**Based on the waterside temperature in the unit off state in the highest permitted ambient temperature

Pressure System Safety Regulations 2000

Refrigeration assemblies/systems may constitute a Pressure System as defined in the Pressure System Safety Regulations 2000.

Ecodesign Directive 2009/125/EC

The product range within this document is designed in accordance to the European Ecodesign Directive 2009/125/EC. The appendix at the rear section of the manual gives the product compliancy metrics. Products sold outside of the EU are exempt from this directive.

Dangerous Substances and Explosive Atmospheres Regulations

The completion of a DSEAR (Dangerous Substances and Explosive Atmospheres Regulations) risk assessment must be completed as a legal requirement by the employer of the business where this equipment will be installed. This is not the responsibility of Airedale International Air Conditioning Ltd to undertake as the manufacturer of the equipment.

Protective Personal Equipment

Airedale recommends that personal protective equipment is used whilst installing, maintaining and commissioning equipment.

Manual Handling

Some operations when servicing or maintaining the unit may require additional assistance with regards to manual handling. This requirement is down to the discretion of the engineer.
Remember do not perform a lift that exceeds your ability.

CAUTION PACEMAKER WEARERS
To avoid any risk of injury, any work to be carried out on or around the compressor and magnetic check valve should be done with personnel that do not have pacemakers fitted.

CAUTION ⚠	Care must be taken when working around the discharge pipe work of the unit. High surface temperatures may exist during unit operation. The refrigerant has a boiling point of -26°C.

Electromagnetic Compatability (EMC)

CAUTION ⚠	Units without compressor enclosures are class A group 1 products and are only intended to be used at locations where there is a distance greater than 30 m between the equipment and third party sensitive radio communication equipment.

Environmental Considerations

Freeze Protection

Airedale recommends the following actions to help protect the unit during low temperature operation. This also includes the units subject to low ambient temperatures.

Units with supply water temperatures below +5°C

Glycol is recommended when a supply water temperature of +5°C or below is required or when static water can be exposed to freezing temperatures.

Units subject to ambient temperatures lower than 0°C, a minimum of 1 of the following is required:

1. Glycol of an appropriate concentration (1) is used within the system to ensure adequate protection.
   Please ensure that the concentration is capable of protection at least 3K lower than the minimum operating ambient.
2. Ensure water/glycol solution is constantly circulated through all waterside pipework and coils to prevent static water from freezing.
3. Ensure that pumps are started and running even during shut down periods, when the ambient is within 3K of the solution freeze point (1) (i.e. if the solution freezes at 0°C, the pump must be operating at 3°C ambient).(2)
4. Additional trace heating is provided for interconnecting pipework.

(1) Refer to your glycol supplier for details.
(2) An actuated suction ball valve shall be fitted to protect the compressor from liquid migration.

Free Cooling Chillers

A minimum of 20% glycol concentration must be applied to all free cooling chillers. Concentration should be increased so that its capable of protection at least 3K lower than the minimum operating ambient.

Flow Control

Full design water flow MUST be maintained at all times. Variable water volume is NOT recommended and will invalidate warranty. Care to be taken when selecting a chiller within 5% of the evaporator minimum flow rate. The end user must ensure that flow variation does not fall below this minimum as the chiller will shut down.

Environmental Policy

It is our policy to:

- Take a proactive approach to resolve environmental issues and ensure compliance with regulatory requirements.
- Train personnel in sound environmental practices.
- Pursue opportunities to conserve resources, prevent pollution and eliminate waste.
- Manufacture products in a responsible manner with minimum impact on the environment.
- Reduce our use of chemicals and minimise their release to the environment.
- Measure, control and verify environmental performance through internal and external audits.
- Continually improve our environmental performance.

CE Directive

Airedale certify that the equipment detailed in this manual conforms with the following EC Directives:

Electromagnetic Compatibility Directive (EMC)	2014/30/EU
Machinery Directive (MD)	89/392/EEC version 2006/42/EC
Pressure Equipment Directive (PED)	2014/68/EU
Ecodesign	2009/125/EC

To comply with these directives appropriate national & harmonised standards have been applied. These are listed on the Declaration of Conformity, supplied with each product.

Contents

Warranty, Commissioning & Maintenance 2
- ChillerGuard™ 2
- Customer Services 2
- Warranty 3

Health and Safety 4
- Safety 4
- Pressure Equipment Directive 4

Nomenclature 12

Range Layout 14

Unit Overview 18

Unit Components 20
- Refrigeration 20
- Turbocor Compressor 22
- Condenser 23
- Electrical 24
- Condenser Fans 26
- Waterside 27
- Controls 35
- Mechanical 39

Design Features & Information 41
- Pipework Design 41
- Refrigeration Schematic 41
- Specific Heat Capacity (SHC) 42
- Minimum System Water Volume Calculations 42
- Typical Part Load Efficiencies 43
- Measurement of Sound Data 46
- Water System 47
- Grooved & Clamped Type Connection 47
- Standard Recommended Installation 47
- Water Systems and Recommended Flow Schemes 48

Contents

Technical Data - TCC (R) 52
TCC11R04S-01, TCC11R06S-01, TCC11R08S-01 52
TCC11R06L-02, TCC11R08L-03, TCC11R10L-03 54
TCC12R08S-04, TCC12R10S-04, TCC12R12S-04 56
TCC12R14S-04, TCC12R10L-05, TCC12R12L-06 58
TCC12R14L-06, TCC12R16L-06, TCC12R18L-06, TCC12R20L-06 60
TCC22R08S-14, TCC22R10S-14, TCC22R12S-14, TCC22R14S-14 62
TCC22R10L-15, TCC22R12L-15, TCC122R14L-15 64
TCC22R16L-16, TCC22R18L-16, TCC22R20L-16 66
TCC23R12S-17, TCC23R14S-17, TCC23R16S-17, TCC23R18S-17 68
TCC23R16L-19, TCC23R18L-19 70
TCC23R20L-20, TCC23R22L-20, TCC23R24L-20 72
TCC24R16S-18, TCC24R18S-18 74
TCC24R20S-18, TCC24R22S-18, TCC24R24S-18 76
TCC24R20L-21, TCC24R22L-21, TCC24R24L-21 78
Technical Data - TCC (X) 80
TCC11X04S-01, TCC11X06S-01, TCC11X08S-01 80
TCC11X06L-02, TCC11X08L-03, TCC11X10L-03 82
TCC12X08S-04, TCC12X10S-04, TCC12X12S-04 84
TCC12X14S-04, TCC12X10L-05, TCC12X12L-06 86
TCC12X14L-06, TCC12X16L-06, TCC12X18L-06, TCC12X20L-06 88
TCC22X08S-14, TCC22X10S-14, TCC22X12S-14, TCC22X14S-14 90
TCC22X10L-15, TCC22X12L-15, TCC22X14L-15 92
TCC22X16L-16, TCC22X18L-16, TCC22X20L-16 94
TCC23X12S-17, TCC23X14S-17, TCC23X16S-17, TCC23X18S-17 96
TCC23X16L-19, TCC23X18L-19 98
TCC23X20L-20, TCC23X22L-20, TCC23X24L-20 100
TCC24X16S-18, TCC24X18S-18, TCC24X20S-18 102
TCC24X22S-18, TCC24X24S-18 104
TCC24X20L-21, TCC24X22L-21, TCC24X24L-21 106
Sound Data - TCC 108
TCC - EC Fans 108
Technical Data - TCF (R) 114
TCF11R06S-07, TCF11R08S-07, TCF11R06L-11 114
TCF11R08L-08, TCF11R10L-10, TCF12R08S-09 116
TCF12R10S-05, TCF12R12S-05, TCF12R14S-05 118
TCF12R12L-12, TCF12R14L-12, TCF12R16L-12 120
TCF12R18L-13, TCF12R20L-13 122
TCF22R10S-22, TCF22R12S-22, TCF22R14S-22 124
TCF22R12L-23, TCF22R14L-23, TCF22R16L-23 126
TCF22R18L-23, TCF22R20L-23 128
TCF23R12S-24, TCF23R14S-24, TCF23R16S-25, TCF23R18S-25 130
TCF23R18L-28, TCF23R20L-28, TCF23R22L-28, TCF23R24L-28 132
TCF24R16S-26, TCF24R18S-26, TCF24R20S-26 134
TCF24R22S-27, TCF24R24S-27 136
TCF24R22L-21, TCF24R24L-21 138

Contents

Technical Data -TCF (X) 140
TCF11X06S-07, TCF11X08S-07, TCF11X06L-11 140
TCF11X08L-08, TCF11X10L-10, TCF12X08S-09 142
TCF12X10S-05, TCF12X12S-05, TCF12X14S-05 144
TCF12X12L-12, TCF12X14L-12, TCF12X16L-12 146
TCF12X18L-13, TCF12X20L-13 148
TCF22X10S-22, TCF22X12S-22, TCF22X14S-22 150
TCF22X12L-23, TCF22X14L-23, TCF22X16L-23 152
TCF22X18L-23, TCF22X20L-23 154
TCC22X18L-23, TCF22X20L-23 156
TCF23X12S-24, TCF23X14S-24, TCF23X16S-25, TCF23X18S-25 158
TCF23X18L-28, TCF23X20L-28, TCF23X22L-28, TCF23X24L-28 160
TCF24X16S-26, TCF24X18S-26, TCF24X20S-26 162
TCF24X22S-27, TCF24X24S-27, TCF24X22L-21, TCF24X24L-21 164
Sound Data - TCF 166
TCF - EC Fans 166
Hydronic Data 171
TCC Waterside Pressure Drop kPa (100% Water) 171
TCF Waterside Pressure Drop kPa (20% Ethylene Glycol) 174
Evaporator Pressure Drop - 100% Water 176
Evaporator Pressure Drop - 20% Ethylene Glycol 178
Strainer Pressure Drop - 100% Water 180
Strainer Pressure Drop - 20% Ethylene Glycol 180
Installation Data 181
Air Cooled Masses & Centre of Gravity (C of G) 181
Point Loadings 185
Unit Lifting 193
Lifting Dimensions 193
General Arrangement 195
Positioning 211
Airflow & Maintenance Clearances 211
Anti Vibration Mounting (Optional) 212
Interconnecting Wiring 214
Power Quality & Harmonics 215
Liquid Level Sensor 216
Pre Start Checks 217
pCO5+ Built In Display and Keypad 218
Unit Operation 219
Restarting the Unit 219
Changing the Setpoint 220
Enabling Pumps 221
Maintenance 222
General Inspections 222
Electrical Inspection 223
Refrigeration 224
Waterside 225
Controls 226
System 227

Contents

Troubleshooting 228
Alarms 230
Alarm Menu Display 230
Pump Alarms 237
Appendix - Ecodesign 238
Technical Data - TCC R 239
TCC11R04S-01, TCC11R06S-01, TCC11R08S-01 239
TCC11R06L-02, TCC11R08L-03, TCC11R10L-03 240
TCC12R08S-04, TCC12R10S-04, TCC12R12S-04 241
TCC12R14S-02, TCC12R10L-05, TCC12R12L-06 242
TCC12R14L-06, TCC12R16L-06, TCC12R18L-06, TCC12R20L-06 243
TCC22R08S-14,TCC22R10S-14, TCC22R12S-14, TCC22R14S-14 244
TCC22R10L-15, TCC22R12L-15, TCC22R14L-15 245
TCC22R16L-16, TCC22R18L-16, TCC22R20L-16 246
TCC23R12S-17, TCC23R14S-17, TCC23R16S-17, TCC23R18S-17 247
TCC23R16L-19, TCC23R18L-19 248
TCC23R20L-20, TCC23R22L-20, TCC23R24L-20 249
TCC24R16S-18, TCC24R18S-18 250
TCC24R20S-18, TCC24R22S-18, TCC24R24S-18 251
TCC24R20L-21, TCC24R22L-21, TCC24R24L-21 252
Technical Data - TCC X 253
TCC11X04S-01, TCC11X06S-01, TCC11X08S-01 253
TCC11X06L-02, TCC11X08L-03, TCC11X10L-03 254
TCC12X08S-04, TCC12X10S-04, TCC12X12S-04 255
TCC12X14S-04, TCC12X10L-05, TCC12X12L-06 256
TCC12X14L-06, TCC12X16L-06, TCC12X18L-06, TCC12X20L-06 257
TCC22X08S-14, TCC22X10S-14, TCC22X12S-14, TCC22X14S-14 258
TCC22X10L-15, TCC22X12L-15, TCC22X14L-15 259
TCC22X16L-16, TCC22X18L-16, TCC22X20L-16 260
TCC23X12S-17, TCC23X14S-17, TCC23X16S-17, TCC23X18S-17 261
TCC23X16L-19, TCC23X18L-19 262
TCC23X20L-20, TCC23X22L-20, TCC23X24L-20 263
TCC24X16S-18 , TCC24X18S-18, TCC24X20S-18 264
TCC24X22S-18, TCC24X24S-18 265
TCC24X20L-21, TCC24X22L-21, TCC24X24L-21 266

Contents

Technical Data - TCF R 267
TCF11R06S-07, TCF11R08S-07, TCF11R06L-11 267
TCF11R08L-08, TCF11R10L-10, TCF12R08S-09 268
TCF12R10S-05, TCF12R12S-05, TCF12R14S-05 269
TCF12R12L-12, TCF12R14L-12, TCF12R16L-12 270
TCF12R18L-13, TCF12R20L-13 271
TCF22R10S-22, TCF22R12S-22, TCF22R14S-22 272
TCF22R12L-23, TCF22R14L-23, TCF22R16L-23 273
TCF22R18L-23, TCF22R20L-23 274
TCF23R12S-24, TCF23R14S-24, TCF23R16S-25, TCF23R18S-25 275
TCF23R18L-28, TCF23R20L-28, TCF23R22L-28, TCF23R24L-28 276
TCF24R16S-26, TCF24R18S-26, TCF24R20S-26 277
TCF24R22S-27, TCF24R24S-27 278
TCF24R22L-21, TCF24R24L-21 279
Technical Data - TCF X 280
TCF11X06S-07, TCF11X08S-07, TCF11X06L-11 280
TCF11X08L-08, TCF11X10L-10, TCF12X08S-09 281
TCF12X10S-05, TCF12X12S-05, TCF12X14S-05 282
TCF12X12L-12, TCF12X14L-12, TCF12X16L-12 283
TCF12X18L-13, TCF12X20L-13 284
TCF22X10S-22, TCF22X12S-22, TCF22X14S-22 285
TCF22X12L-23, TCF22X14L-23, TCF22X16L-23 286
TCF22X18L-23, TCF22X20L-23 287
TCF23X12S-24, TCF23X14S-24, TCF23X16S-25, TCF23X18S-25 288
TCF23X18L-28, TCF23X20L-28, TCF23X22L-28, TCF23X24L-28 289
TCF24X16S-26, TCF24X18S-26, TCF24X20S-26 290
TCF24X22S-27, TCF24X24S-27 , TCF24X22L-21, TCF24X24L-21 291

Nomenclature

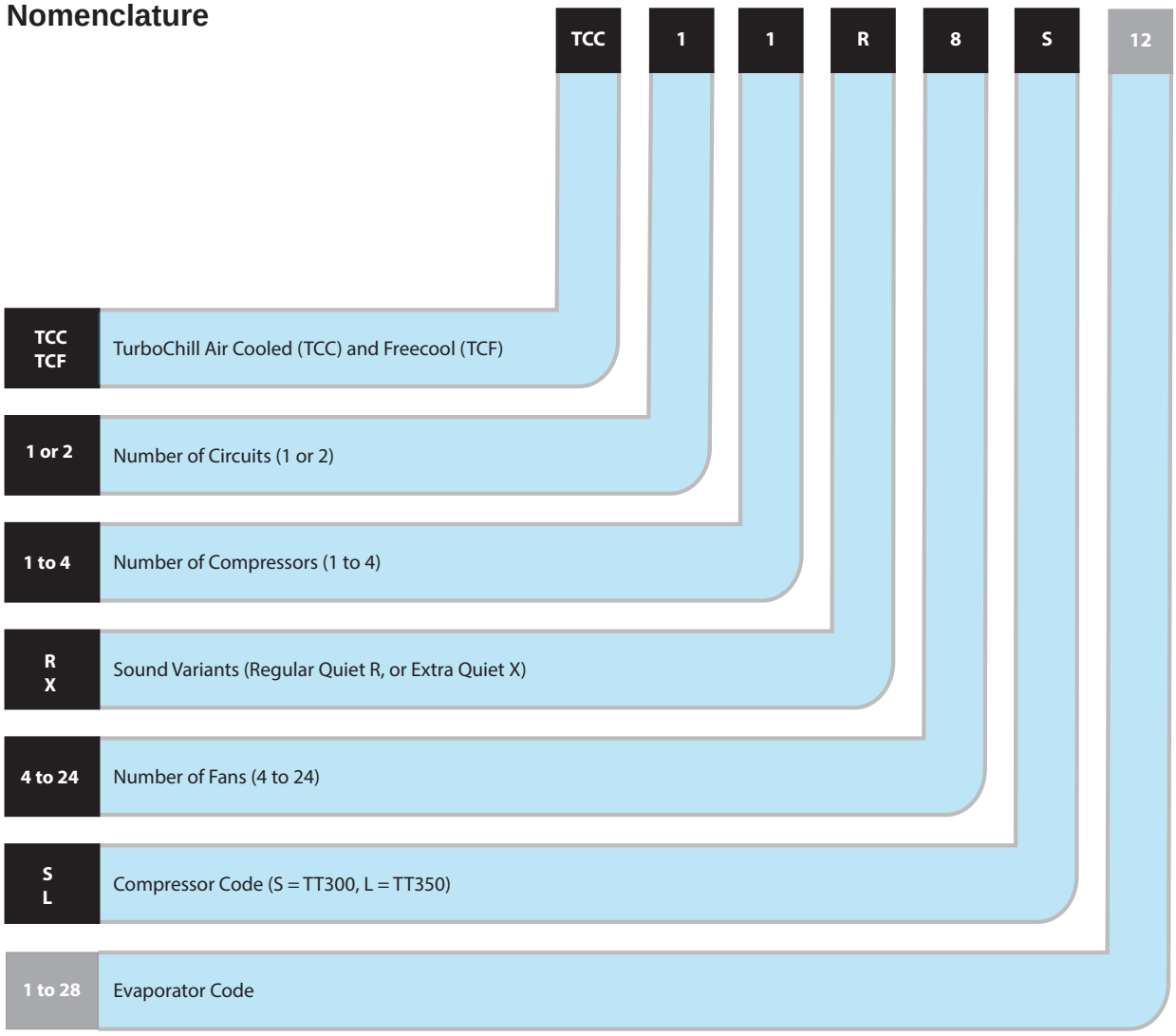

Introduction

The Airedale range of TurboChill air cooled and Freecool liquid chillers uses the technologically superior centrifugal Turbocor compressors. Designed to cover the high capacity range between 200kW and 1700kW.

Each model is individually selected to provide the optimum solution for each application by offering maximum flexibility and matching customer requirements in terms of:

- Capacity
- EER/ESEER (Energy Efficiency Ratio and European Seasonal Energy Efficiency ratio)
- Sound Levels - Quiet (R) and Extra Quiet (X)
- Footprint

For guidance the unit's information within this manual has been generated at nominal conditions, due to the unit's ability to modulate capacity individually tailored unit solutions are available.

Please contact Airedale with your specific requirements and we will be pleased to provide you with an individually tailored selection and technical detail.

Refrigerants

The range has been designed and optimised for operation with ozone benign R134a refrigerant.

Construction

The base shall be fabricated from galvanised steel to ensure a rigid, durable, weatherproof construction.

Unit panels shall be manufactured from galvanised sheet steel coated with epoxy baked powder paint to provide a durable and weatherproof finish.

Standard unit colour shall be Light Grey (RAL 7035).

Free Cooling Operation

The TurboChill Free Cool chiller has been designed to provide the cooling load required whilst optimising energy efficiency at all times and as such will take advantage of free cooling whenever available. If the free cooling available cannot satisfy the required full cooling load, direct expansion cooling is used to supplement the output.

In high ambients where free cooling is not available the fan speed modulates in the conventional manner to maintain an optimised head pressure. Free cooling is initiated wherever the outdoor ambient is 2°C less than the return water temperature.

During concurent cooling mode condensing temperature is constantly monitored and intelligently kept within the compressor envelope to allow the fans to run as fast as possible and therefore achieve the most free-cooling without having a negative impact on compressor integrity.

In ambients where the free cooling coil is capable of meeting the full cooling demand, the condenser fans are modulated to provide the desired duty. The condenser fans are capable of being modulated between 15-100% (EC) or 40% - 100% (AC) of airflow to maintain the supply water temperature.

During periods where the condenser fan speed has been reduced to a minimum, the supply water temperature will then be controlled by the 3 way valve.

Free Cooling vs. Mechanical Cooling

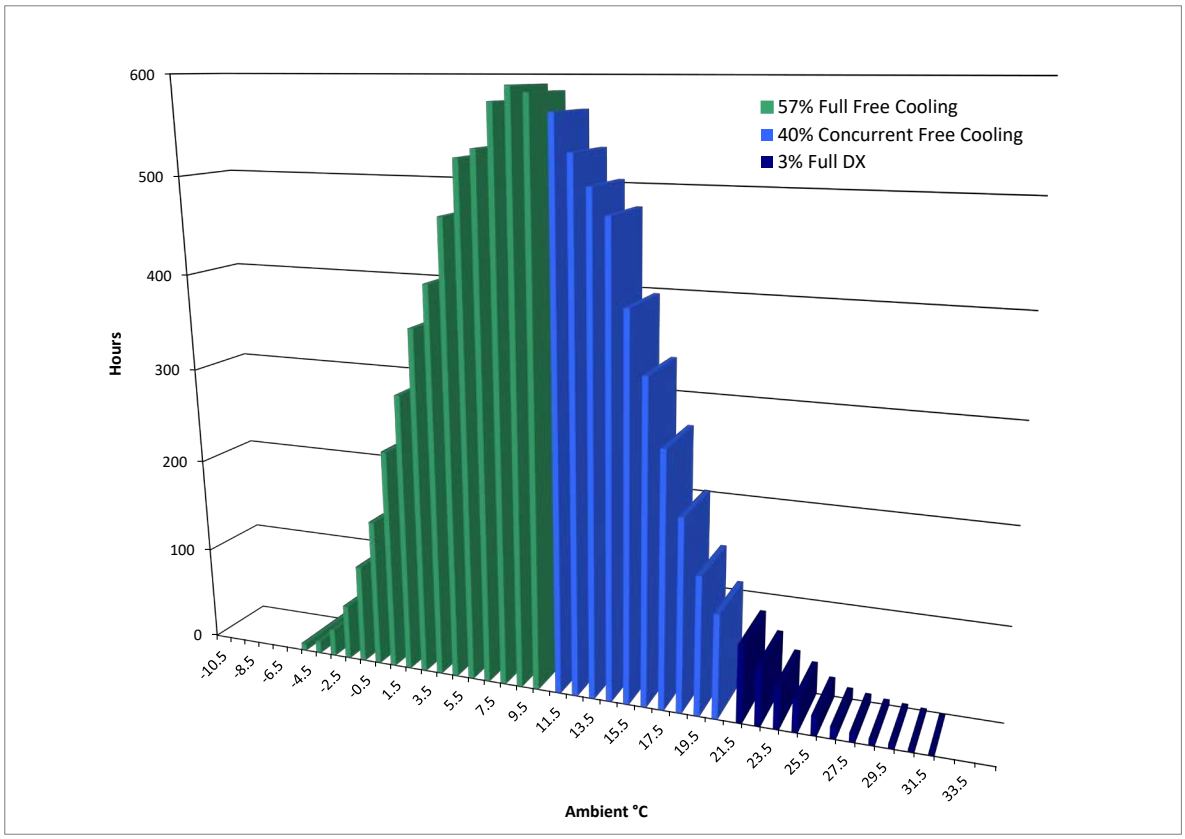

Range Layout

Regular Quiet - Single Circuit - Air Cooled

Model No	Nominal Cooling (kW)	EER	ESEER	Free-cooling (kW)	Free Cooling EER	Sound Pressure @ 10m (dBA)	Dimensions H x W x L (mm)	ETL
Regular Quiet - Single Circuit - Air Cooled								
TCC11R04S-01	240	3.41	4.61	-	-	55.9	2800 x 2200 x 2626	✓
TCC11R06S-01	265	3.67	5.17	-	-	54.7	2800 x 2200 x 3758	✓
TCC11R08S-01	275	3.86	5.42	-	-	54.2	2800 x 2200 x 4890	✓
TCC11R06L-02	390	3.03	4.68	-	-	57.4	2800 x 2200 x 3758	✓
TCC11R08L-03	425	3.16	4.82	-	-	57.1	2800 x 2200 x 4890	✓
TCC11R10L-03	450	3.24	4.99	-	-	56.1	2800 x 2200 x 6022	✓
TCC12R08S-04	470	3.32	4.47	-	-	58.7	2800 x 2200 x 4890	✓
TCC12R10S-04	500	3.47	5.11	-	-	57.9	2800 x 2200 x 6022	✓
TCC12R12S-04	530	3.54	5.37	-	-	57.4	2800 x 2200 x 7154	✓
TCC12R14S-04	560	3.58	5.41	-	-	57.1	2800 x 2200 x 8286	✓
TCC12R10L-05	600	3.05	4.82	-	-	59.8	2800 x 2200 x 6022	✓
TCC12R12L-06	670	3.16	4.91	-	-	59.5	2800 x 2200 x 7154	✓
TCC12R14L-06	750	3.15	4.99	-	-	59.4	2800 x 2200 x 8286	✓
TCC12R16L-06	800	3.17	5.04	-	-	59.0	2800 x 2200 x 9418	✓
TCC12R18L-06	850	3.09	5.04	-	-	59.0	2800 x 2200 x 10550	✓
TCC12R20L-06	900	3.06	5.02	-	-	58.8	2800 x 2200 x 11682	✓

Regular Quiet - Dual Circuit - Air Cooled

Model No	Nominal Cooling (kW)	EER	ESEER	Free-cooling (kW)	Free Cooling EER	Sound Pressure @ 10m (dBA)	Dimensions H x W x L (mm)	ETL
Regular Quiet - Dual Circuit - Air Cooled								
TCC22R08S-14	470	3.36	4.30	-	-	58.6	2800 x 2200 x 4890	✓
TCC22R10S-14	500	3.52	4.95	-	-	57.9	2800 x 2200 x 6022	✓
TCC22R12S-14	530	3.60	5.14	-	-	57.4	2800 x 2200 x 7154	✓
TCC22R14S-14	560	3.64	5.21	-	-	57.0	2800 x 2200 x 8286	✓
TCC22R10L-15	600	3.13	4.20	-	-	59.8	2800 x 2200 x 6022	×
TCC22R12L-15	670	3.25	4.44	-	-	59.4	2800 x 2200 x 7154	✓
TCC22R14L-15	750	3.26	4.57	-	-	59.3	2800 x 2200 x 8286	✓
TCC22R16L-16	800	3.30	4.71	-	-	58.9	2800 x 2200 x 9418	✓
TCC22R18L-16	850	3.24	4.79	-	-	58.9	2800 x 2200 x 10550	✓
TCC22R20L-16	900	3.21	4.86	-	-	58.6	2800 x 2200 x 11682	✓
TCC23R12S-17	630	3.35	5.16	-	-	59.6	2800 x 2200 x 7154	✓
TCC23R14S-17	680	3.44	5.27	-	-	59.3	2800 x 2200 x 8286	✓
TCC23R16S-17	730	3.51	5.30	-	-	59.0	2800 x 2200 x 9418	✓
TCC23R18S-17	780	3.53	5.36	-	-	58.8	2800 x 2200 x 10550	✓
TCC23R16L-19	840	3.10	4.88	-	-	60.5	2800 x 2200 x 9418	✓
TCC23R18L-19	900	3.19	5.00	-	-	60.3	2800 x 2200 x 10550	✓
TCC23R20L-20	960	3.26	5.09	-	-	60.0	2800 x 2200 x 11682	✓
TCC23R22L-20	1020	3.28	5.12	-	-	59.8	2800 x 2200 x 12814	✓
TCC23R24L-20	1080	3.29	5.16	-	-	59.7	2800 x 2200 x 13946	✓
TCC24R16S-18	820	3.32	5.21	-	-	60.6	2800 x 2200 x 9418	✓
TCC24R18S-18	860	3.40	5.26	-	-	60.2	2800 x 2200 x 10550	✓
TCC24R20S-18	900	3.46	5.31	-	-	60.0	2800 x 2200 x 11682	✓
TCC24R22S-18	950	3.49	5.33	-	-	59.8	2800 x 2200 x 12814	✓
TCC24R24S-18	1000	3.52	5.46	-	-	59.6	2800 x 2200 x 13946	✓
TCC24R20L-21	1040	3.02	5.07	-	-	61.4	2800 x 2200 x 11682	✓
TCC24R22L-21	1100	3.08	5.11	-	-	61.3	2800 x 2200 x 12814	✓
TCC24R24L-21	1160	3.14	5.14	-	-	61.0	2800 x 2200 x 13946	✓

Range Layout

Extra Quiet - Single Circuit - Air Cooled

Model No	Nominal Cooling (kW)	EER	ESEER	Free-cooling (kW)	Free Cooling EER	Sound Pressure @ 10m (dBA)	Dimensions H x W x L (mm)	ETL
Extra Quiet - Single Circuit - Air Cooled								
TCC11X04S-01	200	3.46	4.36	-	-	54.2	2800 x 2200 x 2626	✓
TCC11X06S-01	225	3.90	5.38	-	-	54.3	2800 x 2200 x 3758	✓
TCC11X08S-01	235	4.11	5.63	-	-	53.9	2800 x 2200 x 4890	✓
TCC11X06L-02	350	3.09	4.76	-	-	54.7	2800 x 2200 x 3758	✓
TCC11X08L-03	385	3.40	4.95	-	-	54.7	2800 x 2200 x 4890	✓
TCC11X10L-03	410	3.55	5.15	-	-	54.8	2800 x 2200 x 6022	✓
TCC12X08S-04	430	3.36	4.98	-	-	56.9	2800 x 2200 x 4890	✓
TCC12X10S-04	460	3.60	5.13	-	-	56.9	2800 x 2200 x 6022	✓
TCC12X12S-04	490	3.75	5.48	-	-	56.9	2800 x 2200 x 7154	✓
TCC12X14S-04	520	3.81	5.67	-	-	56.9	2800 x 2200 x 8286	✓
TCC12X10L-05	560	3.01	5.07	-	-	57.3	2800 x 2200 x 6022	✓
TCC12X12L-06	630	3.20	5.15	-	-	57.3	2800 x 2200 x 7154	✓
TCC12X14L-06	710	3.27	5.19	-	-	57.3	2800 x 2200 x 8286	✓
TCC12X16L-06	760	3.32	5.34	-	-	57.2	2800 x 2200 x 9418	✓
TCC12X18L-06	810	3.35	5.38	-	-	57.2	2800 x 2200 x 10550	✓
TCC12X20L-06	860	3.28	5.37	-	-	57.2	2800 x 2200 x 11682	✓

Extra Quiet - Dual Circuit - Air Cooled

Model No	Nominal Cooling (kW)	EER	ESEER	Free-cooling (kW)	Free Cooling EER	Sound Pressure @ 10m (dBA)	Dimensions H x W x L (mm)	ETL
Extra Quiet - Dual Circuit - Air Cooled								
TCC22X08S-14	430	3.33	4.39	-	-	56.9	2800 x 2200 x 4890	✓
TCC22X10S-14	460	3.58	4.87	-	-	56.9	2800 x 2200 x 6022	✓
TCC22X12S-14	490	3.74	5.28	-	-	56.9	2800 x 2200 x 7154	✓
TCC22X14S-14	520	3.81	5.34	-	-	56.9	2800 x 2200 x 8286	✓
TCC22X10L-15	520	3.07	4.41	-	-	57.3	2800 x 2200 x 6022	✓
TCC22X12L-15	630	3.22	4.47	-	-	57.3	2800 x 2200 x 7154	✓
TCC22X14L-15	710	3.29	4.68	-	-	57.3	2800 x 2200 x 8286	✓
TCC22X16L-16	760	3.37	4.88	-	-	57.2	2800 x 2200 x 9418	✓
TCC22X18L-16	810	3.40	5.00	-	-	57.2	2800 x 2200 x 10550	✓
TCC22X20L-16	860	3.34	5.07	-	-	57.2	2800 x 2200 x 11682	✓
TCC23X12S-17	590	3.35	5.29	-	-	58.4	2800 x 2200 x 7154	✓
TCC23X14S-17	640	3.50	5.38	-	-	58.4	2800 x 2200 x 8286	✓
TCC23X16S-17	690	3.60	5.43	-	-	58.4	2800 x 2200 x 9418	✓
TCC23X18S-17	740	3.67	5.49	-	-	58.3	2800 x 2200 x 10550	✓
TCC23X16L-19	780	3.09	5.03	-	-	58.7	2800 x 2200 x 9418	✓
TCC23X18L-19	840	3.22	5.10	-	-	58.7	2800 x 2200 x 10550	✓
TCC23X20L-20	900	3.32	5.22	-	-	58.6	2800 x 2200 x 11682	✓
TCC23X22L-20	960	3.41	5.25	-	-	58.6	2800 x 2200 x 12814	✓
TCC23X24L-20	1020	3.44	5.32	-	-	58.6	2800 x 2200 x 13946	✓
TCC24X16S-18	800	3.29	5.31	-	-	59.5	2800 x 2200 x 9418	✓
TCC24X18S-18	830	3.45	5.39	-	-	59.4	2800 x 2200 x 10550	✓
TCC24X20S-18	860	3.55	5.45	-	-	59.3	2800 x 2200 x 11682	✓
TCC24X22S-18	910	3.61	5.48	-	-	59.3	2800 x 2200 x 12814	✓
TCC24X24S-18	960	3.65	5.59	-	-	59.2	2800 x 2200 x 13946	✓
TCC24X20L-21	1000	2.95	5.19	-	-	59.7	2800 x 2200 x 11682	✓
TCC24X22L-21	1040	3.11	5.27	-	-	59.7	2800 x 2200 x 12814	✓
TCC24X24L-21	1080	3.20	5.33	-	-	59.6	2800 x 2200 x 13946	✓

Range Layout

Regular Quiet - Single Circuit - Free Cooled

Model No	Nominal Cooling (kW)	EER	ESEER	Free-cooling (kW)	Free Cooling EER	Sound Pressure @ 10m (dBA)	Dimensions H x W x L (mm)	ETL
Regular Quiet - Single Circuit - FreeCool								
TCF11R06S-07	275	3.62	4.44	265.8	20.01	55.0	2800 x 2200 x 3758	✓
TCF11R08S-07	300	3.71	4.60	325.7	18.01	54.4	2800 x 2200 x 4890	✓
TCF11R06L-11	390	2.95	3.91	299.5	22.08	57.4	2800 x 2200 x 3758	×
TCF11R08L-08	425	2.94	4.22	374.6	20.72	57.5	2800 x 2200 x 4890	✓
TCF11R10L-10	430	3.29	4.43	431.8	19.46	55.9	2800 x 2200 x 6022	✓
TCF12R08S-09	470	3.47	4.33	387.4	21.42	58.6	2800 x 2200 x 4890	✓
TCF12R10S-05	500	3.76	4.74	458.1	20.27	57.8	2800 x 2200 x 6022	✓
TCF12R12S-05	530	3.87	4.89	523.8	19.31	57.3	2800 x 2200 x 7154	✓
TCF12R14S-05	560	3.95	4.95	586.3	18.53	57.0	2800 x 2200 x 8286	✓
TCF12R12L-12	670	3.44	4.40	571.6	21.07	59.3	2800 x 2200 x 7154	✓
TCF12R14L-12	750	3.49	4.42	657.5	20.78	59.1	2800 x 2200 x 8286	✓
TCF12R16L-12	800	3.54	4.47	733.0	20.27	58.7	2800 x 2200 x 9418	✓
TCF12R18L-13	850	3.49	4.54	806.9	19.83	58.6	2800 x 2200 x 10550	✓
TCF12R20L-13	900	3.47	4.58	879.7	19.46	58.4	2800 x 2200 x 11682	✓

Regular Quiet - Dual Circuit - Free Cooled

Model No	Nominal Cooling (kW)	EER	ESEER	Free-cooling (kW)	Free Cooling EER	Sound Pressure @ 10m (dBA)	Dimensions H x W x L (mm)	ETL
Regular Quiet - Dual Circuit - FreeCool								
TCF22R10S-22	490	3.78	4.54	454.7	20.27	57.7	2800 x 2200 x 6022	✓
TCF22R12S-22	530	3.89	4.73	523.8	19.31	57.3	2800 x 2200 x 7154	✓
TCF22R14S-22	560	3.97	4.79	586.3	18.53	57.0	2800 x 2200 x 8286	✓
TCF22R12L-23	650	3.52	4.21	565.7	21.07	59.0	2800 x 2200 x 7154	✓
TCF22R14L-23	720	3.61	4.28	648.0	20.78	58.8	2800 x 2200 x 8286	✓
TCF22R16L-23	765	3.69	4.39	720.7	20.27	58.4	2800 x 2200 x 9418	✓
TCF22R18L-23	850	3.64	4.43	806.9	19.83	58.5	2800 x 2200 x 10550	✓
TCF22R20L-23	900	3.63	4.49	879.7	19.46	58.2	2800 x 2200 x 11682	✓
TCF23R12S-24	630	3.57	4.65	559.6	20.63	59.6	2800 x 2200 x 7154	✓
TCF23R14S-24	680	3.68	4.75	634.4	20.05	59.3	2800 x 2200 x 8286	✓
TCF23R16S-25	730	3.77	4.78	707.6	19.57	58.9	2800 x 2200 x 9418	✓
TCF23R18S-25	780	3.82	4.84	779.7	19.16	58.7	2800 x 2200 x 10550	✓
TCF23R18L-28	900	3.44	4.54	824.6	20.27	60.1	2800 x 2200 x 10550	✓
TCF23R20L-28	960	3.53	4.60	902.2	19.96	59.9	2800 x 2200 x 11682	✓
TCF23R22L-28	1020	3.59	4.62	979.2	19.69	59.6	2800 x 2200 x 12814	✓
TCF23R24L-28	1080	3.63	4.64	1055.6	19.46	59.5	2800 x 2200 x 13946	✓
TCF24R16S-26	820	3.56	4.79	739.6	20.45	60.5	2800 x 2200 x 9418	✓
TCF24R18S-26	860	3.65	4.85	810.6	19.92	60.2	2800 x 2200 x 10550	✓
TCF24R20S-26	900	3.73	4.91	879.7	19.46	59.9	2800 x 2200 x 11682	✓
TCF24R22S-27	950	3.79	4.94	951.6	19.14	59.7	2800 x 2200 x 12814	✓
TCF24R24S-27	1000	3.84	5.12	1022.8	18.85	59.5	2800 x 2200 x 13946	✓
TCF24R22L-21	1100	3.29	4.57	1007.8	20.27	61.2	2800 x 2200 x 12814	✓
TCF24R24L-21	1160	3.37	4.58	1085.6	20.01	60.9	2800 x 2200 x 13946	✓

Range Layout

Extra Quiet - Single Circuit - Free Cooled

Model No	Nominal Cooling (kW)	EER	ESEER	Free-cooling (kW)	Free Cooling EER	Sound Pressure @ 10m (dBA)	Dimensions H x W x L (mm)	ETL
Extra Quiet - Single Circuit - FreeCool								
TCF11X06S-07	250	3.25	3.96	216.8	45.63	54.2	2800 x 2200 x 3758	×
TCF11X08S-07	260	3.47	4.15	266.5	42.07	54.2	2800 x 2200 x 4890	✓
TCF11X06L-11	350	2.32	3.54	237.8	50.04	54.6	2800 x 2200 x 3758	×
TCF11X08L-08	385	2.47	3.81	301.7	47.62	54.6	2800 x 2200 x 4890	×
TCF11X10L-10	410	2.67	3.94	359.6	45.40	54.7	2800 x 2200 x 6022	×
TCF12X08S-09	415	3.20	4.25	308.0	49.61	56.9	2800 x 2200 x 4890	✓
TCF12X10S-05	480	3.44	4.56	376.9	47.59	56.8	2800 x 2200 x 6022	✓
TCF12X12S-05	510	3.60	4.65	436.3	45.91	56.8	2800 x 2200 x 7154	✓
TCF12X14S-05	540	3.69	4.77	493.7	44.53	56.8	2800 x 2200 x 8286	✓
TCF12X12L-12	600	3.01	4.03	457.4	48.76	57.2	2800 x 2200 x 7154	×
TCF12X14L-12	620	3.23	4.27	515.4	48.31	57.2	2800 x 2200 x 8286	✓
TCF12X16L-12	740	3.15	4.20	596.6	47.44	57.1	2800 x 2200 x 9418	✓
TCF12X18L-13	760	3.24	4.30	653.1	46.71	57.1	2800 x 2200 x 10550	✓
TCF12X20L-13	780	3.31	4.37	707.8	46.07	57.1	2800 x 2200 x 11682	✓

Extra Quiet - Dual Circuit - Free Cooled

Model No	Nominal Cooling (kW)	EER	ESEER	Free-cooling (kW)	Free Cooling EER	Sound Pressure @ 10m (dBA)	Dimensions H x W x L (mm)	ETL
Extra Quiet - Dual Circuit - FreeCool								
TCF22X10S-22	440	3.67	4.21	367.4	47.01	56.8	2800 x 2200 x 6022	✓
TCF22X12S-22	490	3.80	4.66	430.9	45.34	56.8	2800 x 2200 x 7154	✓
TCF22X14S-22	520	3.91	4.70	487.7	43.99	56.8	2800 x 2200 x 8286	✓
TCF22X12L-23	600	3.21	3.62	457.4	48.76	57.2	2800 x 2200 x 7154	×
TCF22X14L-23	620	3.44	4.21	515.4	48.31	57.2	2800 x 2200 x 8286	✓
TCF22X16L-23	740	3.43	4.22	596.6	47.44	57.1	2800 x 2200 x 9418	✓
TCF22X18L-23	760	3.55	4.30	653.1	46.71	57.1	2800 x 2200 x 10550	✓
TCF22X20L-23	780	3.64	4.38	707.8	46.07	57.1	2800 x 2200 x 11682	✓
TCF23X12S-24	590	3.28	4.52	455.3	47.91	58.4	2800 x 2200 x 7154	✓
TCF23X14S-24	640	3.43	4.63	520.3	46.92	58.3	2800 x 2200 x 8286	✓
TCF23X16S-25	690	3.54	4.65	584.3	46.11	58.3	2800 x 2200 x 9418	✓
TCF23X18S-25	740	3.62	4.68	647.8	45.44	58.2	2800 x 2200 x 10550	✓
TCF23X18L-28	820	3.07	4.32	668.2	47.20	58.6	2800 x 2200 x 10550	✓
TCF23X20L-28	900	3.16	4.38	739.8	46.71	58.5	2800 x 2200 x 11682	✓
TCF23X22L-28	915	3.30	4.44	794.6	46.28	58.5	2800 x 2200 x 12814	✓
TCF23X24L-28	1020	3.30	4.41	872.6	45.91	58.4	2800 x 2200 x 13946	✓
TCF24X16S-26	750	3.20	4.70	258.0	47.96	59.0	2800 x 2200 x 9418	✓
TCF24X18S-26	820	3.37	4.69	668.2	46.87	59.3	2800 x 2200 x 10550	✓
TCF24X20S-26	860	3.46	4.71	729.8	46.07	59.2	2800 x 2200 x 11682	✓
TCF24X22S-27	910	3.53	4.73	793.2	45.53	59.2	2800 x 2200 x 12814	✓
TCF24X24S-27	960	3.58	5.01	856.3	45.05	59.1	2800 x 2200 x 13946	✓
TCF24X22L-21	1040	2.91	4.35	825.5	47.38	59.6	2800 x 2200 x 12814	✓
TCF24X24L-21	1080	2.99	4.38	887.8	46.71	59.5	2800 x 2200 x 13946	✓

Unit Overview

Airflow
- AC Condenser Fans
- EC Condenser Fans
- High Airflow EC Condenser Fans
- Fan Discharge Plenum
- Extended Height Fan Discharge Plenum

Electrical Panel
- Single Point Isolation
- UltraCap Power Backup
- Control Panel Heater
- Panel Ventilation
- Emergency Stop
- Power Monitoring
- Rain Hood

Controls
- Microprocessor
- Leak Detection
- Inteligent Head Pressure Control

Coils
- Epoxy Coated Microchannel Condenser Coils
- RTPF FreeCooling Coils

Waterside
- Differential Pressure Sensor
- Flow Switch
- Pump Interlock
- Water Filter
- Various Pump Options
- Immersion Heater
- Grooved and Clamped Type Connections

Refrigeration
- Centrifugal Compressors
- Flooded Evaporator with Integral Subcooler
- Actuated Suction Ball Valves
- Liquid and Discharge Shut Off Valves
- Liquid Line Sight Glasses
- Dual Pressure Relief Valves
- Micro-Plate Economiser

Unit Components

Refrigeration

Refrigeration	TCC	TCF
Compressors - Turbocor Centrifugal	●	●
Dual Maintainable Pressure Relief Valves	●	●
Microchannel Expoxy Coated Condensing Coils	●	●
RTPF Free Cooling Coils	-	●
Epoxy Coated RTPF Free Cooling Coils	-	○
Actuated Starting Line Assembly	●	●
Filter Driers with Replaceable Cores	●	●
Electronic Expansion Valves	●	●
Flooded Evaporator with integral subcooler	●	●
Stainless Steel Suction Pipe Assembly	●	●
Full Operating Charge of R134a	●	●
No Refrigerant	○	○
Acoustically Lined Compressor Enclosure/s	○	○
Liquid and Discharge Shut Off Valves	●	●
Liquid Line Sight Glasses (integral to EEV)	●	●
Micro-Plate Economiser	○	○
Actuated Suction Ball Valves	○	○

● Standard features ○ Optional features – Feature not available

CAUTION ⚠	* Feature required if unit is to be shut down for winter with water still circulating through unit. Freeze protection. This is to stop potential liquid migration.

Evaporator

Flooded evaporator incorporating an internal round tube plate fin heat exchanger. This heat exchanger is used to further sub-cool refrigerant leaving the condenser extending the potential cooling capacity and as a result, efficiency of the system. At the same time suction gas vapour that passes over the heat exchanger within the shell is superheated to a higher temperature, eliminating the risk of wet vapour returning to the compressor. The heat exchanger is insulated with closed cell polyurethane foam which is to Class O fire rating and the material is UV resistant.

The flooded evaporator results in significant energy savings in compressor operation particularly at part load.

Two immersion heater(s) and thermostat protect the evaporator against freeze up in ambient temperatures down to -20°C. (in compliance with Airedale freeze protection policy).

Connections for External Trace Heating (230V/500W available).

Compressors and evaporator shall be mounted on a rigid galvanised heavy duty sub frame. Fully weatherproofed electrical panels are situated at one end of the unit.

Actuated Suction Ball Valve(s)

To protect the compressors against liquid migration, actuated suction line ball valves shall be fitted. This protects the compressors when there is no cooling demand by keeping the refrigerant in the evaporator, even if water is still flowing through the unit. This option also allows partial pumpdown of the system refrigerant charge into the evaporator where it is isolated in the event of a leak.

Economiser Circuit for Increased Part Load Efficiency

The addition of an economiser circuit provides increased cooling and enhances EER, in full and part load operation.

Sub cooled liquid is expanded using a dedicated EEV (electronic expansion valve) to medium pressure and passed through one side of a plate heat exchanger.

Through the other side flows the ‘normal’ pressure liquid.

The result is that the sub cooling of the liquid entering the system EEV is increased, which improves evaporator performance and at the same time the suction pressure within the compressor body is lifted, improving compressor efficiency.

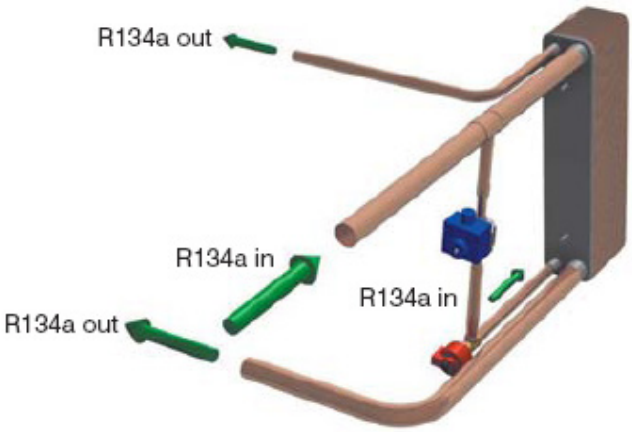

Turbocor Compressor

Turbocor centrifugal compressor supplied with as standard:

- Suction and discharge shut off valves
- Discharge non-return valve
- Line reactor (for removing additional impedance harmonics and voltage spikes in the ac waveform)
- EMI/EMC filter and comprising of:
    - o AC-DC rectifier
    - o DC capacitors
    - o DC-AC (IGBT) converter
    - o Motor/bearing management system and incorporated surge protection
    - o Soft start module
    - o Magnetic bearing system
    - o The compressors are mounted on Turbocor specially designed vibration reducing isolating rubber mounts
    - o Linear capacity modulation is provided by a variable frequency drive

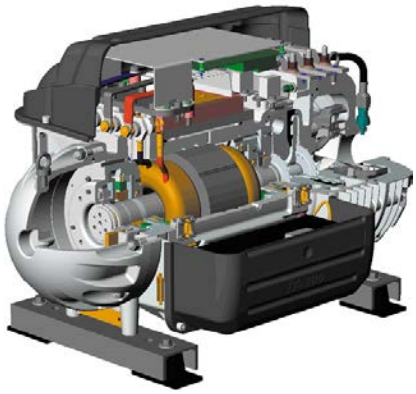

Key benefits of Turbocor compressor technology:

- Oil Free Operation
- More efficient use of heat exchangers
- No oil entrainment issues – pipe work can be optimised for performance not oil return
- Variable speed operation offering exact capacity match and optimum part load performance
- Magnetic bearing system constantly optimises shaft / impeller position
- Small and light, only 120kg or 132kg (compressor size dependant
- No mechanical contact, very quiet operation
- Very low start current, only 2A
- The intelligent, self optimising compressor offers near silent, oil free operation and ultra efficient variable speed control
- Turbocor compressor shaft and impellers levitate on a magnetic cushion eliminating friction and vibration resulting in the compressor running at a smooth and reduced sound spectrum
- The TurboChill compressor's variable speed control offers 2 major benefits:
    - o Uses substantially less power at part load and gives accurate set-point control and exact capacity match
    - o The inbuilt electronic soft start produces a very low starting current of just 2A and eradicates the need to oversize electrical supply components on site

Condenser

Large surface area microchannel coil(s) (ideally positioned to optimise airflow and heat transfer) shall be manufactured as a “V-block” arrangement. This “V-block” arrangement has a lower airside pressure drop making the fans run more efficiently. The coils have freeflowing liquid drains that enable us to reduce the amount of subcooling done in the coil, leaving more area for heat exchange.

R134a Leak Detection System

A factory calibrated leak detection system shall be fitted as standard to units containing circuits carrying > 500 tonnes equivalent CO2 / circuit of refrigerant to comply with F-gas legislation, however the leak detection system can be supplied as an optional extra with refrigerant charges <500 tonnes equivalent CO2. A dedicated refrigerant sensor shall be fitted in close proximity to each evaporator circuit and will raise an alarm on detection of refrigerant gas.

Maintainable Dual Pressure Relief Valve

An auto resetting pressure relief valve assembly shall be provided per evaporator circuit, opening on pressure rise above 10.3 barg. The dual shut-off valve assembly incorporates 2 pressure relief valves which can be individually shut off via a 3 way valve. This allows the maintenance of individual pressure relief valves without any requirement for refrigerant evacuation. Rupture discs are also fitted on systems with a circuit refrigerant charge larger than 300kg in line with EN 378-2:2008+A2:2012 clause 6.2.6.5. In accordance with EN13136:2013, pressure relief valves have been sized to ensure that in the event of fire they can prevent excessive build-up of pressure within the evaporator. EN13136:2013 section 6.2.1 has been used to size valves accordingly.

Fire is a hazard that these units have not been designed to operate under. However, the inclusion of various safety devices ensures that any damage due to fire is limited via the release of pressure in the form of gas discharge.

If concerns of the ability of the pressure relief valve to discharge in the event of a fire >107°C exist, then it is the responsibility of the end user to protect the pressure relief valve assembly from excessive external temperatures.

This must however allow the pressure relief valve to discharge effectively and not act as a ‘choke’ (offer any resistance) when discharging.

Electrical

Controls and Electrical	TCC	TCF
Leak detection on circuits containing >300kg of refrigerant	●	●
Intelligent Head Pressure Control	●	●
Discharge Non Return Valve	●	●
Power Monitoring	○	○

● Standard features ○ Optional features – Feature not available

3 Phase Single Point Isolaton

Single point isolation shall be fitted as a standard feature.

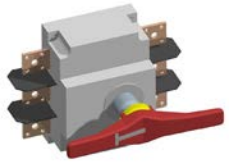

Ultracap Power Backup

The Ultracap module is a standard feature utilising the latest Ultra Capacitor technology in external backup device for the EVD Evolution drivers and pCO controllers. The module guarantees temporary power to the controller and drivers in the event of mains power failures. The Ultra Capacitors are used to maintain the controller's main functions, to close the electronic valves in the event of mains power failures. This avoids the need to install a solenoid valve in the refrigerant circuit or use the battery backup module and allows the system to resume control as soon as mains or backup power returns to the unit.

Energy Manager

Analysis of system energy consumption can be monitored via a dedicated LCD display. Unit parameters can be adjusted via the unit microprocessor control to affect energy usage in line with the system need.

Mains Cable Entry

The unit mains cable can enter from either side of the electrical control panel.

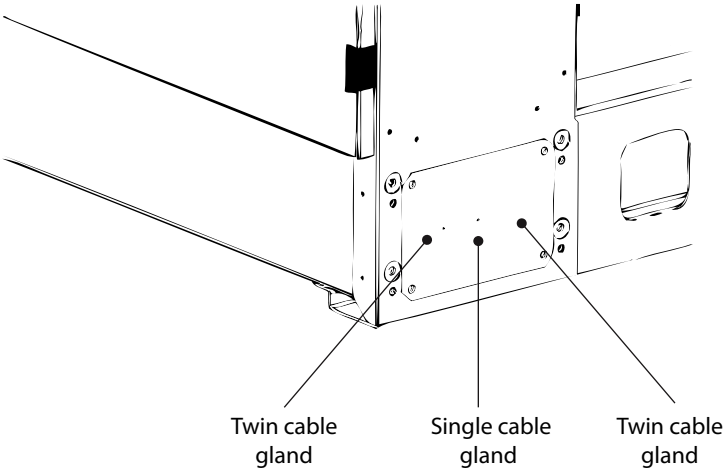

Maximum Cable Gland Sizes

Single 1 x M75S
Twin 2 x M63S

Control Panel Light

An optional control panel light may be fitted to enable control panel maintenance to be carried out during poor light conditions.

Maintenance Socket

A single phase maintenance socket (RCD protected) is available located within the control panel. This socket enables UK plugs to be connected.

Distribution System

This system has been designed to be connected to a TN type distribution system. For alternate distribution type systems, contact Airedale.

Condenser Fans

Fans	TCC	TCF
Ø800mm AC Axial Fans	●	●
EC Fan	○	○
High Airflow EC Fan	○	○

● Standard features ○ Optional features – Feature not available

Energy saving Electronically Commutated (EC) Fan Motor

Each 800 mm diameter fan incorporates on board electronics with AC / DC conversion and inverter driven DC motor control to offer unparalleled high efficiency levels combined with smooth step-less speed control and quiet operation.
Sickle blades reduce air turbulence to minimise sound levels and power consumption whilst maximising performance.
The long bell mouth design provides improved aerodynamics, up to 10% more air movement, and an extended vertical throw of air to reduce the chance of air re-circulation. As standard the enclosure is complete with an integral finger proof grille.
The fans offer maximum airflow performance while keeping sound levels to a minimum.
A mains EMC filter is fitted when the standard EC fan option is selected with the unit. The filter is designed for convenient mains connection within the bus bar chamber.
The in built EC fan control module allows for fan speed modulation from 15-100%, a AC fans modulating range is typically 40-100% of full fan speed.
The EC fan presents superior energy efficiency at full and reduced fan speed compared to the equivalent AC fan motor, offering efficiency savings anywhere between 30 to 100% compared with an AC fan.
Fan speeds are factory set depending on sound level variant.
Voltage regulated (VR) fan speed controllers offer a linear response. By comparison the standard EC fan is adjusted on demand via the unit microprocessor with precision, offering substantial energy savings. The following illustration shows a comparison of the typical power input required by each method.

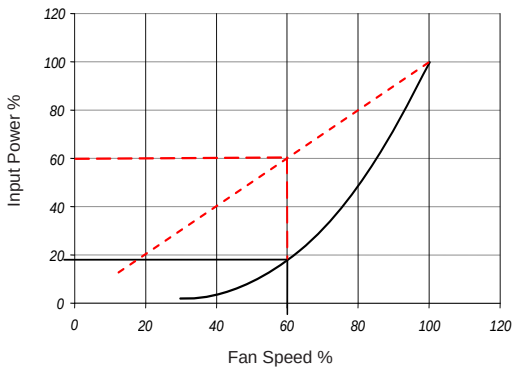

Fan speed of 60%
Voltage regulated input power required 60%
EC input power required 18%

—— EC (Electronically Commutated) Fan Speed Control

- - - - Voltage Regulated Fan Speed Control

Condenser Fan and Motor - AC

Axial fan assemblies with finger proof grille and incorporating external rotor AC motor technology, capable of highly accurate discreet speed control., Discharges air vertically. The fans offer maximum performance whilst keeping sound levels to a minimum.

Waterside

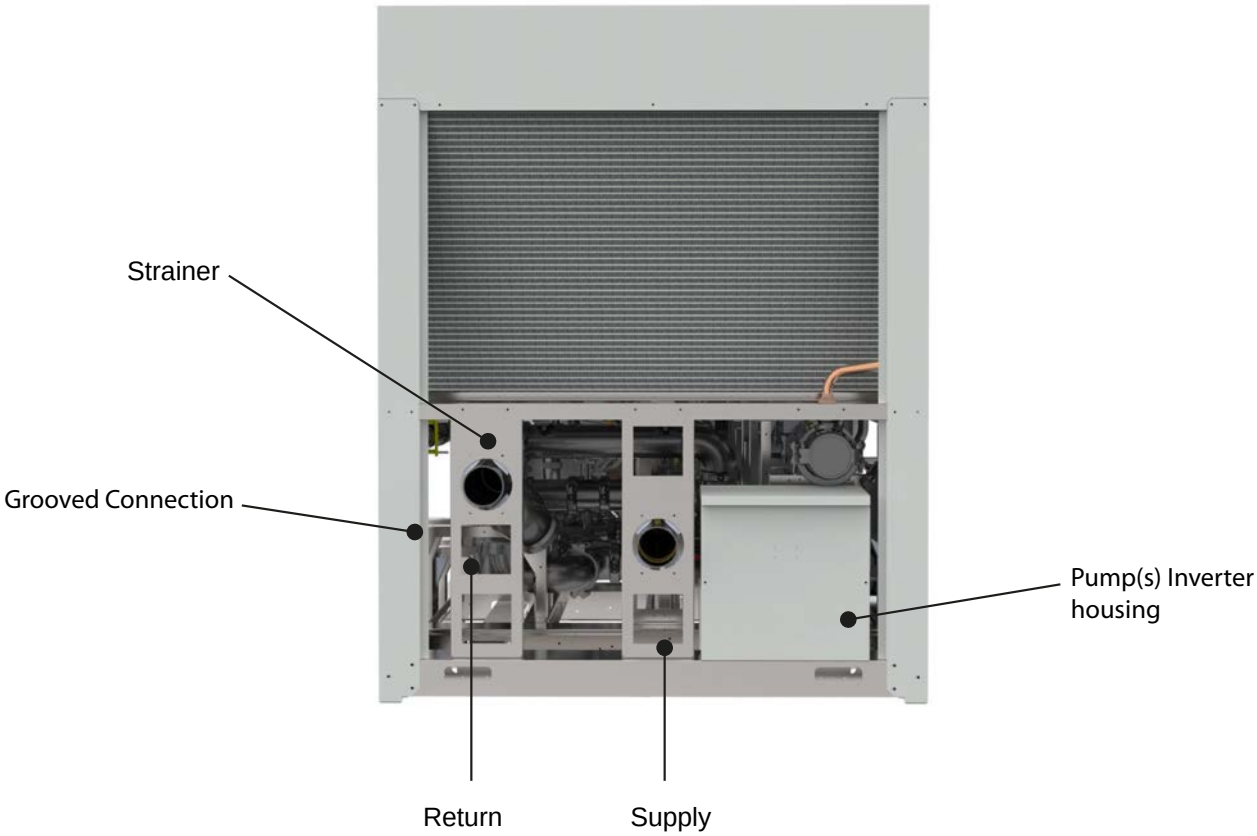

Waterside	TCC	TCF
Evaporator Immersion Heaters	●	●
Water Filter	○	●
Grooved and Clamped Type Connections	●	●
Pump Hydronic Options**	○	○
Water Flow Meter	○	○
Flanged Connections	○	○
Pump Interlock*	○	○
Flow Switch*	○	○

● Standard features ○ Optional features – Feature not available

CAUTION ⚠	*Each feature is a flow proving device, and 2 out of the 3 should be fitted to any unit to validate warranty.

**Pump options only available on units with sufficient space.

Free Cooling Coil

A free cooling coil constructed in a “V” frame arrangement, allowing for efficient heat transfer from the ambient air temperature to the cooling process.
The free cooling coil is manufactured from copper tube and aluminium fin.
Free cooling is initiated whenever the outdoor ambient temperature is 2K less than the return water temperature.
The “V” frame arrangement enables efficient concurrent cooling.
The TurboChill free cool chiller’s pipe work has been designed to optimise pressure drop, reducing pump input power.
It shall be fitted with a water drain valve (schrader point located at lowest point of coils) for maintenance purposes.

Optimised Free Cooling Coil

Additional free cooling is available with an upgraded freecooling coil and fan combination. Whereby the coil design is optimised for high ΔTs and high water temperature applications as is typical in data centres. This has been shown to provide up to 40% additional annual energy savings when applied to a typical load profile compared to the standard freecooling unit design. Please contact Airedale for more details on this optional feature.

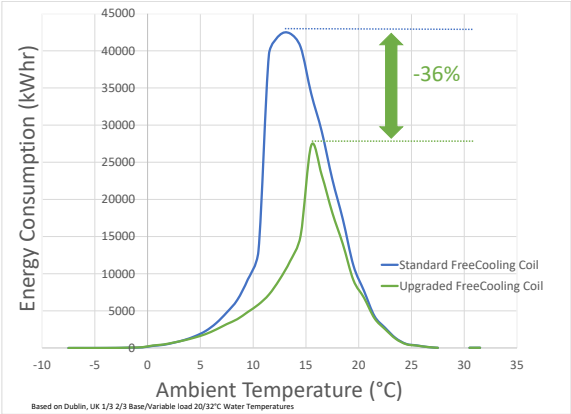

Flow Proving Device

An evaporator differential pressure sensor facilitates low flow limiting and pressure drop monitoring via the microprocessor which shall be fitted to ensure correct unit water flow.

Grooved and Clamp Type Connections

Grooved and clamp type connections shall be fitted to the unit.

Flanged Connections

Flanged connections shall be fitted to the unit upon request. Please contact Airedale.

Pump Interlock*

Provision for a pump interlock is available within the control panel.

Water Flow Switch*

If selected. A water flow switch is fitted ensuring integrity of the cooling solution flow.
The flow switch shall protect the Chiller against low water flow conditions. Despatched loose for on site fitment.

CAUTION ⚠	*Each feature is a flow proving device, and 2 out of the 3 should be fitted to any unit to validate warranty.

Pump Vibration Eliminator

Flexible couplings shall be fitted to the pumps to reduce any vibration through the system pipework.

Pump Options

A variety of pump options to suit a wide range of applications are available:

Factory fitted in line as a single pump or run / standby configuration and available in standard and larger nominal external head pressures.

Factory fitted run/standby pumps have a shut off valve to the inlet and a non return valve to the outlet, enabling one pump to be maintained without interrupting Chiller flow. Supplied with electrical switchgear and isolating valve as standard.

Run / standby pumps are rotated automatically to ensure even pump usage and prolong component life.

Pump - AC Motor - Fixed Speed

A factory fitted in line single or run / standby pump is available with various pump external head options; please specify at order.

Flow can be proven via the microprocessor display.

Factory fitted and supplied as standard complete with:

- Differential pressure sensor
- Isolating valves
- Inlet strainer
- Vibration isolation
- Electrical switch gear

Pump - Inverter Driven - Variable Speed

A factory fitted in line single or run / standby pump is available with various pump external head options; please specify at order.

Flow is varied via an electronic flow meter, depending on system requirements.

Adjustment and monitoring is via the microprocessor display.

Factory fitted and supplied as standard complete with:

- Differential pressure sensor
- Isolating valves
- Inlet strainer
- Vibration isolation
- Electrical switch gear
- Inverter panel with ventilation fan and panel heater (high / low ambient operation)

Waterside Options

Air Cooled

		EVAPORATOR ONLY	EXTENDED PIPEWORK	NO BYPASS (FILTER + SOV)	BYPASS (FILTER + SOV)	SINGLE PUMP	RUN AND STANDBY
AIR COOLED UNITS	TCC11R04S-01	●	-	-	-	-	-
	TCC11R06S-01	●	●	○	-	-	-
	TCC11R08S-01	●	●	●	●	●	●
	TCC12R08S-04	●	●	○	-	-	-
	TCC12R10S-04	●	●	●	●	●	●
	TCC12R12S-04	●	●	●	●	●	●
	TCC12R14S-04	●	●	●	●	●	●
	TCC11R06L-02	●	●	○	-	-	-
	TCC11R08L-03	●	●	○	-	-	-
	TCC11R10L-03	●	●	●	●	●	●
	TCC12R10L-05	●	●	●	●	-	-
	TCC12R12L-06	●	●	●	●	●	●
	TCC12R14L-6	●	●	●	●	●	●
	TCC12R16L-06	●	●	●	●	●	●
	TCC12R18L-06	●	●	●	●	●	●
	TCC12R20L-06	●	●	●	●	●	●
	TCC22R08S-14	●	●	○	-	-	-
	TCC22R10S-14	●	●	●	●	●	●
	TCC22R12S-14	●	●	●	●	●	●
	TCC22R14S-14	●	●	●	●	●	●
	TCC22R10L-15	●	●	●	●	-	-
	TCC22R12L-15	●	●	●	●	●	●
	TCC22R14L-15	●	●	●	●	●	●
	TCC22R16L-16	●	●	●	●	●	●
	TCC22R18L-16	●	●	●	●	●	●
	TCC22R20L-16	●	●	●	●	●	●
	TCC23R12S-17	●	●	●	●	-	-
	TCC23R14S-17	●	●	●	●	●	●
	TCC23R16S-17	●	●	●	●	●	●
	TCC23R18S-17	●	●	●	●	●	●
	TCC23R16L-19	●	●	●	●	●	●
	TCC23R18L-19	●	●	●	●	●	●
	TCC23R20L-20	●	●	●	●	●	●
	TCC23R22L-20	●	●	●	●	●	●
	TCC23R24L-20	●	●	●	●	●	●
	TCC24R16S-18	●	●	●	●	-	-
	TCC24R18S-18	●	●	●	●	●	●
	TCC24R20S-18	●	●	●	●	●	●
	TCC24R22S-18	●	●	●	●	●	●
	TCC24R24S-18	●	●	●	●	●	●
	TCC24R20L-21	●	●	●	●	●	●
	TCC24R22L-21	●	●	●	●	●	●
	TCC24R24L-21	●	●	●	●	●	●

● Waterside + internal strainer
○ Waterside + external strainer (supplied loose)
– Not avaliable

Waterside Options

Air Cooled

		EVAPORATOR ONLY	EXTENDED PIPEWORK	NO BYPASS (FILTER + SOV)	BYPASS (FILTER + SOV)	SINGLE PUMP	RUN AND STANDBY
AIR COOLED UNITS	TCC11X04S-01	●	-	-	-	-	-
	TCC11X06S-01	●	●	●	●	-	-
	TCC11X08S-01	●	●	●	●	●	●
	TCC11X06L-02	●	●	●	-	-	-
	TCC11X08L-03	●	●	●	-	-	-
	TCC11X10L-03	●	●	●	●	●	●
	TCC12X08S-04	●	●	●	-	-	-
	TCC12X10S-04	●	●	●	●	●	●
	TCC12X12S-04	●	●	●	●	●	●
	TCC12X14S-04	●	●	●	●	●	●
	TCC12X10L-05	●	●	●	●	N	N
	TCC12X12L-06	●	●	●	●	●	●
	TCC12X14L-06	●	●	●	●	●	●
	TCC12X16L-06	●	●	●	●	●	●
	TCC12X18L-06	●	●	●	●	●	●
	TCC12X20L-06	●	●	●	●	●	●
	TCC22X08S-14	●	●	●	-	-	-
	TCC22X10S-14	●	●	●	●	●	●
	TCC22X12S-14	●	●	●	●	●	●
	TCC22X14S-14	●	●	●	●	●	●
	TCC22X10L-15	●	●	●	●	-	-
	TCC22X12L-15	●	●	●	●	●	●
	TCC22X14L-15	●	●	●	●	●	●
	TCC22X16L-16	●	●	●	●	●	●
	TCC22X18L-16	●	●	●	●	●	●
	TCC22X20L-16	●	●	●	●	●	●
	TCC23X12S-17	●	●	-	-	-	-
	TCC23X14S-17	●	●	●	●	Y	Y
	TCC23X16S-17	●	●	●	●	Y	Y
	TCC23X18S-17	●	●	●	●	Y	Y
	TCC23X16L-19	●	●	●	●	●	●
	TCC23X18L-19	●	●	●	●	●	●
	TCC23X20L-20	●	●	●	●	●	●
	TCC23X22L-20	●	●	●	●	●	●
	TCC23X24L-20	●	●	●	●	●	●
	TCC24X16S-18	●	●	○	○	-	-
	TCC24X18S-18	●	●	●	●	●	●
	TCC24X20S-18	●	●	●	●	●	●
	TCC24X22S-18	●	●	●	●	●	●
	TCC24X24S-18	●	●	●	●	●	●
	TCC24X20L-21	●	●	●	●	●	●
	TCC24X22L-21	●	●	●	●	●	●
	TCC24X24L-21	●	●	●	●	●	●

● Waterside + internal strainer
○ Waterside + external strainer (supplied loose)
– Not avaliable

Waterside Options

Free Cooled

		NO BYPASS (FILTER + SOV)	BYPASS (FILTER + SOV)	SINGLE PUMP	RUN AND STANDBY
FREE COOLED UNITS	TCF11R06S-07	○	○	-	-
	TCF11R08S-07	●	●	●	●
	TCF12R08S-09	○	-	-	-
	TCF12R10S-05	○	○	-	-
	TCF12R12S-05	●	●	●	●
	TCF12R14S-05	●	●	●	●
	TCF11R06L-11	○	-	-	-
	TCF11R08L-08	○	-	-	-
	TCF11R10L-10	○	○	-	-
	TCF12R12L-12	●	●	●	●
	TCF12R14L-12	●	●	●	●
	TCF12R16L-12	●	●	●	●
	TCF12R18L-13	●	●	●	●
	TCF12R20L-13	●	●	●	●
	TCF22R10S-22	●	●	-	-
	TCF22R12S-22	●	●	●	●
	TCF22R14S-22	●	●	●	●
	TCF22R12L-23	●	●	●	●
	TCF22R14L-23	●	●	●	●
	TCF22R16L-23	●	●	●	●
	TCF22R18L-23	●	●	●	●
	TCF22R20L-23	●	●	●	●
	TCF23R12S-24	●	●	-	-
	TCF23R14S-24	●	●	●	●
	TCF23R16S-25	●	●	●	●
	TCF23R18S-25	●	●	●	●
	TCF23R18L-28	●	●	●	●
	TCF23R20L-28	●	●	●	●
	TCF23R22L-28	●	●	●	●
	TCF23R24L-28	●	●	●	●
	TCF24R16S-26	●	●	-	-
	TCF24R18S-26	●	●	●	●
	TCF24R20S-26	●	●	●	●
	TCF24R22S-27	●	●	●	●
	TCF24R24S-27	●	●	●	●
	TCF24R22L-21	●	●	●	●
	TCF24R24L-21	●	●	●	●

● Waterside + internal strainer
○ Waterside + external strainer (supplied loose)
– Not avaliable

Waterside Options

Free Cooled

		NO BYPASS (FILTER + SOV)	BYPASS (FILTER + SOV)	SINGLE PUMP	RUN AND STANDBY
FREE COOLED UNITS	TCF11X06S-07	-	-	-	-
	TCF11X08S-07	○	○	○	○
	TCF11X06L-11	○	-	-	-
	TCF11X08L-08	○	-	-	-
	TCF11X10L-10	○	-	-	-
	TCF12X08S-09	○	-	-	-
	TCF12X10S-05	○	○	-	-
	TCF12X12S-05	●	●	●	●
	TCF12X14S-05	●	●	●	●
	TCF12X12L-12	●	●	●	●
	TCF12X14L-12	●	●	●	●
	TCF12X16L-12	●	●	●	●
	TCF12X18L-13	●	●	●	●
	TCF12X20L-13	●	●	●	●
	TCF22X10S-22	●	●	○	○
	TCF22X12S-22	●	●	●	●
	TCF22X14S-22	●	●	●	●
	TCF22X12L-23	●	●	●	●
	TCF22X14L-23	●	●	●	●
	TCF22X16L-23	●	●	●	●
	TCF22X18L-23	●	●	●	●
	TCF22X20L-23	●	●	●	●
	TCF23X12S-24	●	●	-	-
	TCF23X14S-24	●	●	●	●
	TCF23X16S-25	●	●	●	●
	TCF23X18S-25	●	●	●	●
	TCF23X18L-28	●	●	●	●
	TCF23X20L-28	●	●	●	●
	TCF23X22L-28	●	●	●	●
	TCF23X24L-28	●	●	●	●
	TCF24X16S-26	●	●	-	-
	TCF24X18S-26	●	●	●	●
	TCF24X20S-26	●	●	●	●
	TCF24X22S-27	●	●	●	●
	TCF24X24S-27	●	●	●	●
	TCF24X22L-21	●	●	●	●
	TCF24X24L-21	●	●	●	●

● Waterside + internal strainer
○ Waterside + external strainer (supplied loose)
– Not avaliable

Water Connections
Water inlet and outlet connections shall be of a grooved and clamped type construction.
Optional flanged connections shall be available on request, please consult Airedale.

Water connection to evaporator only (air cooled only)
Water inlet and outlet connections shall terminate directly on the evaporator.

Extended Water Connections (air cooled only)
Extended water connections shall be available on all air cooled units,it allows the water connections to terminate at the end of the unit.

Water Filter
A 20 mesh water filter can be supplied fitted to protect the evaporator from clogging by sediment. On certain models the filter is fitted externally.

Bypass Options

No bypass
Comprises
- Shut off valves
- Filter

Flushing bypass kit (standard)
Comprises:
- Shut off valves
- Filter
- Bypass leg with shut off valve

Flushing bypass kit (regulating)
Comprises:
- Shut off valves
- Filter
- Bypass leg with Double regulating valve

Pump Configurations

Single pump + filter + bypass (flushing)
Comprises:
- Single pump with vibration isolation
- Shut off valves
- Filter
- Bypass leg

Single pump + filter + bypass (regulating)
Comprises:
- Single pump with vibration isolation
- Shut off valves
- Filter
- Double regulating valves

Run & standby pumps + filter + bypass (flushing)
Comprises:
- Run and standby pumps with vibration isolation
- Shut off valves
- Filter
- Non return valves

Run & standby pumps + filter + bypass (regulating)
Comprises:
- Run and standby pumps with vibration isolation
- Shut off valves
- Filter
- Double regulating valve
- Non return valve

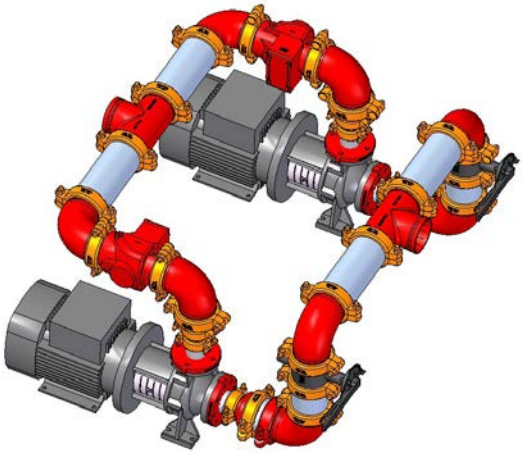

Controls

The microprocessor controller shall offer powerful analogue and digital control to meet a wide range of monitoring and control features including a real time clock and Industry standard communication port and network connections.

The controller's inbuilt display shall be used for viewing the unit operating status and making adjustments to control parameters by allowing the operator access to a series of display pages.

Also featured shall be a visual alarm and the facility to adjust and display control settings by local operator for information and control.

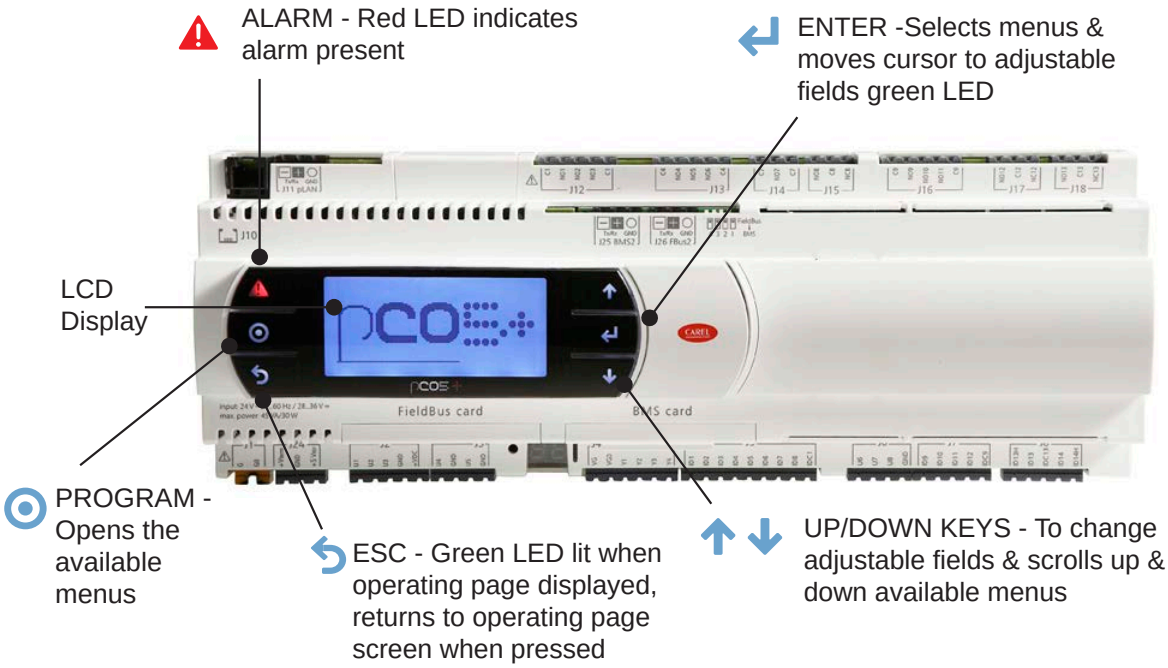

Temperature Control

The microprocessor controller shall monitor the return and supply temperatures. The supply temperature is used to calculate the required cooling demand. Further calculations are then made to determine the optimum compressors to be selected and their individual cooling demands. These calculations ensure the unit efficiency is maximised under all load conditions. As standard, the microprocessor controller can provide an infinite capacity control between 15% and 100%, depending on the component selection. Refer to mechanical data tables for unit specific control ranges.

Monitoring

The microprocessor shall also monitor and display the following measured parameters:

- Supply water temperature
- Return water temperature
- Liquid pressure
- Suction pressure
- Evaporator differential water pressure

Alarm Handling

The controller shall log and allow viewing of the last 150 conditions recorded in descending chronological order through the keypad display.

The following conditions shall be detected, triggering a visual display:

- High compressor discharge temperature (per compressor)
- Low supply temperature
- Phase rotation
- Emergency stop
- Evaporator flow failure
- Low pressure safety switch
- Low suction pressure (per compressor)
- High liquid pressure
- Compressor 1 contactor status
- Compressor 2 contactor status
- ompressor 3 contactor status (dependant on model)
- Compressor 4 contactor status (dependant on model)
- Volt free contact non-critical alarm indication
- Volt free contact critical alarm indication

Building Management Systems (BMS)

Sequencing (Master / Slave and Run / Standby) via the Airedale sequence manager.
Please specify at time of enquiry.

Chiller Sequence Manager

For the efficient temperature and capacity operation of multiple units on a single site, the sequence manager will permit interlinked operation of the complete system thereby providing optimum temperature control and minimum power consumption.

Up to 6 units can be sequenced.

Included within this package is a site visit by an Airedale Control Specialist to set up multiple unit sequence control.

The chiller sequence manager is supplied as a separate control panel to be mounted remotely in an indoor location, such as a plant room.

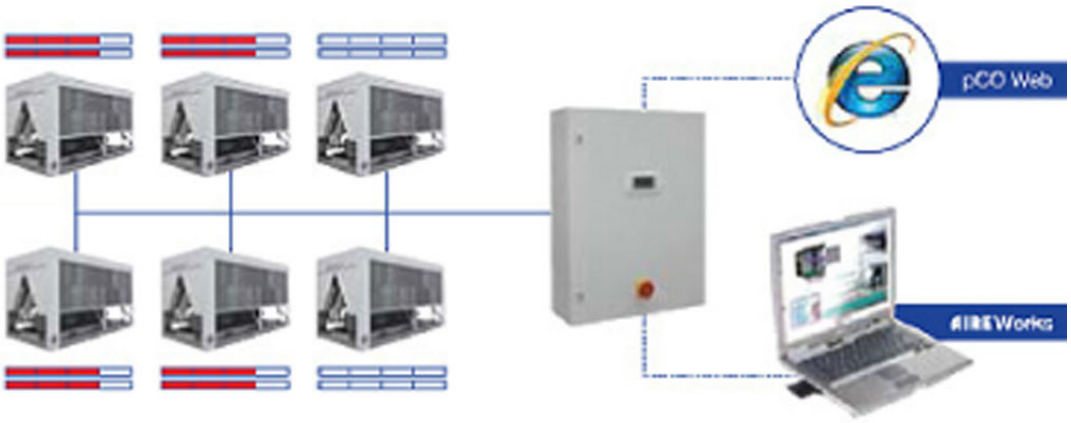

Unit Remote ON/OFF
Disables / Enables the unit remotely.

Compressor Anti Cycle Control
Automatic via the Microprocessor.

Compressor Load Limit
This feature limits the condensing pressure to 15 Barg by unloading the compressor.

Suction Pressure Limiting
Limits the evaporating pressure by unloading at the minimum pressure set-point, which is, adjustable depending on system glycol content.

Supply Temperature Limiting
Based upon the freezing point of the water/ glycol solution, the unit operation is limited to a 2K differential. Cooling is reduced as the temperature approaches the freezing point (below this differential).

Pump(s) Remote ON/OFF
Disables / Enables the pump(s) remotely.

Evaporator Differential Pressure Sensor
Shall facilitate low flow limiting and pressure drop monitoring via the microprocessor.

Remote Setback Temperature Set-point Switch
A setback set-point for supply water temperature shall be selected to suit summer / winter conditions or night setback.

Remote Set-point Adjust
Shall allow the chilled water set-point to be adjusted via an external 0-10V signal.

Compressor Hours Run
Displays hours run of each compressor.

Interactive Head Pressure Setpoint Management
The combination of variable speed compressor, EC fan and interactive control logic allows fans to be slowed down to give the optimum head pressure setpoint in relation to combined power draw of compressor and fans.
The fan speed shall automatically modulate to achieve the best energy balance for all normal operating conditions.
Reducing the head pressure setpoint decreases the compressor input power at the expense of the fan input power.

Compressor Reduced Start Delay
Compressor fast start functionality shall be avaliable for applications that require minimum downtime following 3 phase power failure. This is subject to a compressor UPS being fitted onto the L4 permanent supply. Please contact Airedale.

CAUTION ⚠	**Password Protection** The control system integrity shall be maintained by restricting access with a password PIN number.

IMPORTANT ⚠	To change the PIN number; please contact Airedale at time of order with the preferred 4 digit number.

BMS Interface Card

BMS system configuration by others.
Enables units to be interfaced with most BMS, factory fitted, please contact Airedale.
A wide range of protocols shall be accommodated through the use of interface devices. Available as a standard option are: ModBus / Jbus, Carel, Trend, SNMP, LonWorks, Metasys and BACnet
Also available shall be Airedale's own supervisory plug-in BMS card pCOWEB.
Based on Ethernet TCP/IP secure technology with SNMP features.
Requires no proprietary cabling or monitoring software and supplied pre-programmed with an IP address for ease of setup.

Modbus/Carel BMS Connection

The Airedale controllers shall be able to communicate directly using the Modbus® protocol.
The Modbus® card shall be a small PCB (60mm x 30mm), which is plugged into the controller to provide it with the following protocol support

- Modbus® - JBus slave
- RTU mode (Remote Terminal Unit) with 8 bit encoding and error handling using 16 bit CRC
- Communication standard connection options of RS485 (multipoint) or RS232 (point-point)
- Maximum Baud Rate of 19200

The data communication shall be asynchronous serial, 8 data bits, 2 stop bits and no parity (in total 11 bits/datum).
The data/parameters from the controller shall be represented within Modbus® registers, each register containing information pertaining to temperatures, pressures, setpoint and status etc. shall be available to the site integration company in a spreadsheet format

Lon BMS Connection

The Airedale controllers, using special serial cards, shall be integrated into LonWorks® networks. The RS485 and the FTT10 standards shall be supported by the LonWorks® serial cards.
The two types of LonWorks® serial cards shall differ by the type of interface on the LonWorks® network side:-
FTT-10A 78 kbs (TP/FT-10)
RS485 39 kbs (TP/485-39)

pCOWeb

pCOWeb is a new generation of Airedale supervisory plug-in cards which make communicating with an Airedale unit simply a matter of logging onto the office Intranet or via the web.
Based on Ethernet TCP/IP secure technology, pCOWeb shall require no proprietary cabling. It shall have little or no setup on site and can be pre-programmed with an IP address prior to dispatch from airedale.

CAUTION ⚠	When adding to an existing controls scheme, please consult Airedale Controls to ensure strategy compatibility.

Mechanical

Mechanical	TCC	TCF
Lifting Lugs	●	●
Base - Plain Galvanised Steel	●	●
Panels - Galvanised Sheet Steel with Epoxy Powder Paint	●	●
Standard Height Fan Discharge Plenum	●	●
Extended Height Fan Discharge Plenum	○	○
Anti-Vibration Mounts (Spring and Pad Type)	○	○
Control Panel Rain Hood	○	○

● Standard features ○ Optional features – Feature not available

Lifting Lugs

Lifting Lugs shall be fitted to the unit enabling full lifting requirements. The lifting lug hole diameter is 40 mm.

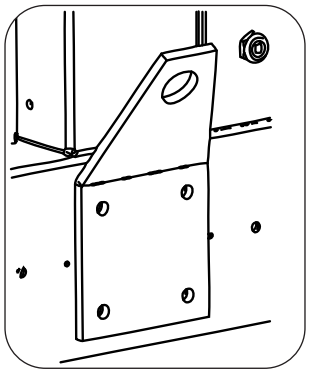

Anti Vibration Mounts (Spring Type)

Specially selected spring vibration isolators shall be supplied loose for on site fitting to the base frame of each unit.
The isolators shall be suitable for fitting to structural steelwork providing the surface is level and of sufficient strength where a high level of vibration elimination is required.

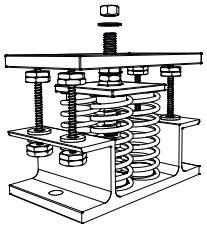

Anti Vibration Mounts (Pad Type)

Pad vibration isolators can be supplied loose for on site fitting to the base frame of each unit.
The isolators are suitable for fitting to structural steelwork providing the surface is level and of sufficient strength where a moderate degree of vibration elimination is required.

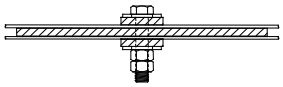

No Discharge Plenum

No discharge plenum is fitted as standard

Discharge Air Plenum - Condenser Fan

Factory fitted and constructed from galvanised sheet steel coated with epoxy baked powder paint, this plenum shall direct discharge air vertically which reduces air re-circulation and provides a degree of acoustic reduction in the horizontal plane.

Standard unit colour shall be Light Grey (RAL 7035).

The overall unit height when fitted with the standard discharge air plenum is 2800mm.

Extended Discharge Air Plenum - Condenser Fan

Site fitted and constructed from galvanised sheet steel coated with epoxy baked powder paint, this plenum shall direct discharge air vertically as an aid to minimise air re-circulation and also offers a degree of acoustic reduction in the horizontal plane; site fitted.

Standard unit colour shall be Light Grey (RAL 7035).

The overall unit height when fitted with the extended discharge air plenum is 3300mm.

Weatherproof Rain Hood

A rain hood shall be fitted to the TurboChill chiller which will allow the customer, (maintenance / commissioning personnel), to work on the control panel whatever the weather with a reduced risk of sensitive electrical components getting wet.

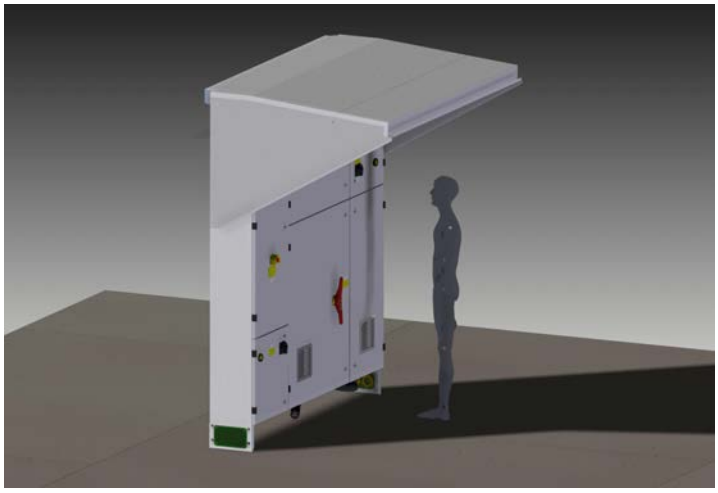

Weatherproof hood

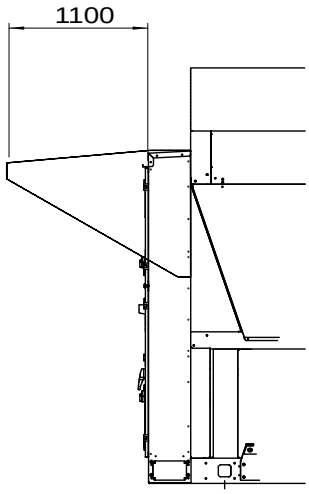

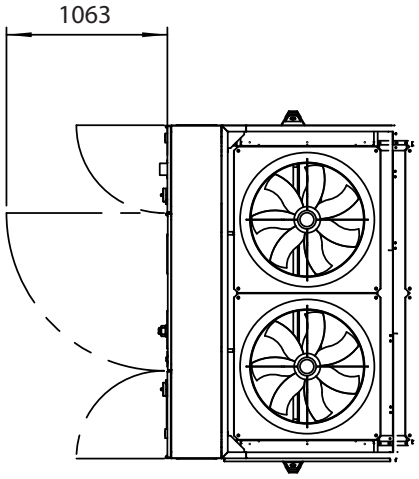

Design Features & Information

Pipework Design

Due to the unique oil free operation of the Turbocor compressor, the need for oil entrainment is eliminated. As pipe work is not required to be sized for oil return it is possible to size pipe work for minimal pressure losses through the system with maximum cooling capacity and optimised unit EER.

Refrigeration Schematic

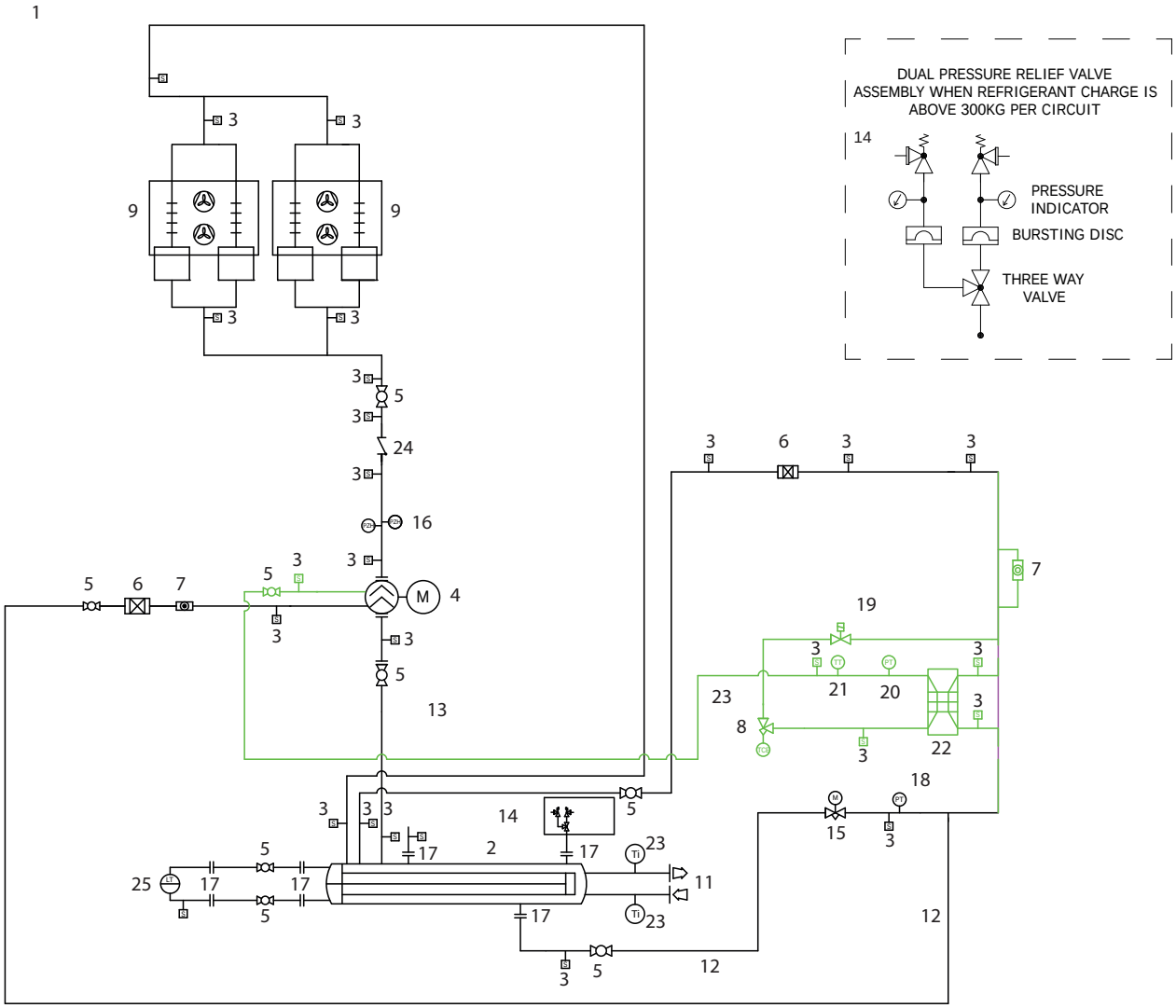

Note: Schematic above is for a single circuit machine.

key

1	Turbochill flooded schematic
2	Flooded evaporator
3	Schrader connection
4	Centrifugal compressor
5	Shut off valve
6	Filter drier
7	Sight glass
8	Electronic expansion valve (economiser circuit only)
9	Condenser section
10	Level transmitter
11	Water connections (Inlet /Outlet)
12	Liquid line
13	Suction line
14	Dual pressure relief valves
15	Liquid level control valve
16	High pressure switch
17	Rotalock adapter
18	Liquid pressure transmitter
19	Solenoid valves
20	Economiser pressure transducer
21	Temperature sensor
22	Economiser
23	Economiser line
24	Non return valve
25	Liquid level sensor

Design Features & Information

Specific Heat Capacity (SHC)

% Ethylene Glycol Concentration		0%	10%	20%	30%	40%
Specific Heat Capacity (kJ/kgK)	(1)	4.190	4.115	3.901	3.686	3.474

% Propylene Glycol Concentration		0%	10%	20%	30%	40%
Specific Heat Capacity (kJ/kgK)	(1)	4.190	4.139	4.033	3.903	3.749

(1) Data quoted for water/glycol solutions at a nominal temperature of 10°C.

CAUTION ⚠	Only use the SHC data when calculating fluid VOLUME. Use figure for 0% concentration (100% water) when applying Glycol Correction Factors, refer to Glycol Data.

Minimum System Water Volume Calculations

METHOD 1
(Preferred Method)
Where the system permanent heat load is known, the minimum water volume in litres Vmin is:

Vmin = Water Flow Rate (litres/min)
x Minimum Compressor Run Time (min)
x Chiller Loading Factor

Chiller Loading Factor = $\frac{\text{Minimum Turndown (kW) x 1.2}}{\text{Permanent Heat Load}}$

Minimum Turndown = 1 compressor – 30%
2 compressors – 15%
3 compressors – 10%
4 compressors – 5%

Example: 750kW output at 35°C Ambient and 7/12°C Water

Permanent Heat Load = 300kW
Minimum Turndown = 15% (2 compressors)

$$= \text{Vmin} = \frac{750 \times 60}{4.19 \times 5} \times 2 \times \frac{(750 \times 0.15)}{300} \times 1.2 = 1933 \text{ Litres}$$

METHOD 2

Where the system permanent heat load is unknown:

Vmin = $\frac{\text{Water Flow Rate (litres/hour) x Minimum turndown ratio x 1.2}}{\text{Maximum number of compressor starts (per hour)}}$

Minimum Turndown = 1 compressor – 30%
2 compressor – 15%
3 compressors– 10%
4 compressors –5%

Example: 750kW output at 35°C Ambient and 7/12°C Water
Minimum Turndown = 0.15 (15% 2 compressors)

$$\text{Vmin} = \frac{750 \times 3600}{4.19 \times 5} \times 0.15 \times 1.2 \times \frac{5}{60} = 1933 \text{ Litres}$$

Capacity Data

For guidance, a number of units from 200 kW to 1700 kW at nominal conditions and at both fan speeds have been pre-selected and used throughout this manual for information only.

Please contact Airedale with your specific requirements and we will be pleased to provide you with an individually tailored selection and technical detail.

Operating Limits

(For 100% Water) Standard Unit

Minimum ambient air DB	-20°C
Maximum ambient air DB at full load operation	35°C
Maximum ambient air DB at reduced load operation	40°C
Minimum supply water temperature	5°C
Maximum return water temperature	26°C*
Maximum supply water temperature	18°C
Minimum / maximum ΔT	4K / 8K

* With an 8K ΔT

Typical Part Load Efficiencies

The following graph gives a general indication of the effect of reduced load on the performance of the unit, for performance details, please contact Airedale.

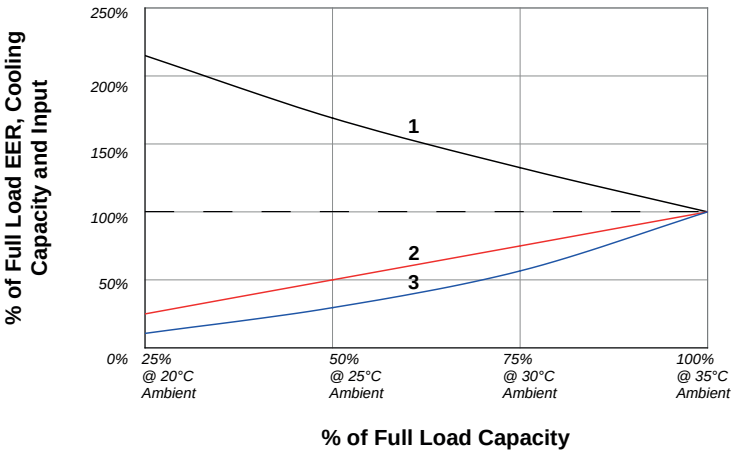

Key: 1 = EER
2 = Output kW
3 = Input kW

ESEER Calculations

The quoted EER figures cover the performance of the unit ONLY at the standard rating conditions of 7/12°C water, 35°C ambient. The ESEER (European Seasonal Energy Efficiency Ratio) calculation method has been developed by Eurovent to give a single value that is a realistic indication of the efficiency of the chiller across the year round range of operation.

The ESEER value is calculated from the unit's performance at 20, 25, 30 and 35°C ambient temperatures for 25, 50, 75 and 100% loading stages respectively, and with a fixed 7°C supply temperature. All calculations assume the system operates with 100% water. Calculation to EN14825.

$$ESEER = A \bullet EER_{100\%} + B \bullet EER_{75\%} + C \bullet EER_{50\%} + D \bullet EER_{25\%}$$

A, B, C and D are weighting factors 0.03, 0.33, 0.41 and 0.23.

	A	B	C	D
Temperature	35°C	30°C	25°C	20°C
Capacity Requirement	100%	75%	50%	25%
Percentage of Total Hours	0.03	0.33	0.41	0.23

Performance Effects of Glycol

Glycol Data

For a given percentage of glycol in the system there are correction factors that need to be applied, the following tables can be used as a guide.

CAUTION

The source data must be 100% water for the correction factors to be valid.

Ethylene Glycol Nominal Correction Factors

Glycol in System / Freezing Point °C		10% / -4°C	20% / -9°C	30% / -15°C	40% / -23°C
Output (kW)	x	0.98	0.97	0.95	0.93
Compressor Input (kW)		0.99	0.98	0.96	0.95
Water Flow (l/s)		0.99	1.02	1.04	1.07
Pressure Drop (kPa)		1.05	1.20	1.38	1.57

Propylene Glycol Nominal Correction Factors

Glycol in System / Freezing Point °C		10% / -2°C	20% / -6°C	30% / -12°C	40% / -20°C
Output (kW)	x	0.97	0.95	0.91	0.88
Compressor Input (kW)		0.99	0.98	0.96	0.95
Water Flow (l/s)		0.98	0.97	0.95	0.95
Pressure Drop (kPa)		1.08	1.17	1.31	1.45

Example: At 100% Water:

Output	=750 kW
Compressor Input	=228.6 kW
Flow Rate	=35.83 l/s
Pressure Drop	=20.6 kPa
Ambient	=35°C
Inlet Fluid Temp.	=7°C
Outlet Fluid Temp.	=12°C (5K ΔT)

To 20% Ethylene Glycol:

	100% Water	Multiplier	20% Ethylene Glycol
Output (kW)	750	x 0.97	727.5 kW
Compressor Input (kW)	228.6	x 0.98	224.0 kW
Water Flow (l/s)	35.83	x 1.02	36.55 l/s
Pressure Drop (kPa)	20.6	x 1.20	24.72 kPa

Sound Data

Measurement of Sound Data

All sound data quoted has been measured in the third-octave band limited values, using a Real Time Analyser calibrated sound intensity meter in accordance with BS EN ISO9614 Part 1:2009. The Global sound data quoted is valid for noise emitted in the horizontal plane in all directions.

All Sound Power Levels quoted are calculated from measured sound intensity according to BS EN ISO9614 Part 1: 2009.

Sound Pressure Levels are calculated from sound power using the expanded parallelepiped method according to BS EN ISO 11203: 2009.

Resultant performance figures obtained from test will be proven to not differ from the claimed figures by more than the allowable deviations specified in table 7 of section VII of Eurovent RS 6/C/003-2016 (A-weighted sound power; +3dBA).

Acoustic data is representative of the unit running at the nominal duty and conditions, under steady state operation

Sound Directivity

The Global sound measurements quoted in the following tables do not incorporate any directivity or denote any sound level heard at any given position surrounding the unit, rather they represent the total sound level radiating from the unit in all directions in the horizontal plane from source.

Using the adjustment factors from the map below, partial sound power levels can be derived from the global sound power data.

Base Correction Values - Global dB

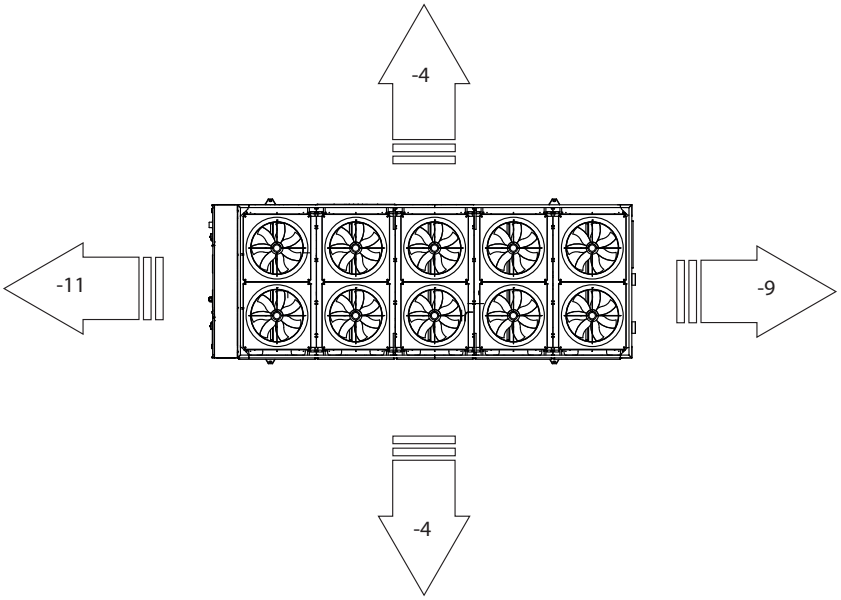

EXAMPLE (dB(A)): 470 kW
Output - Quiet Models - TCC12R08S-04

Overall Sound Power of 89 dB(A) =

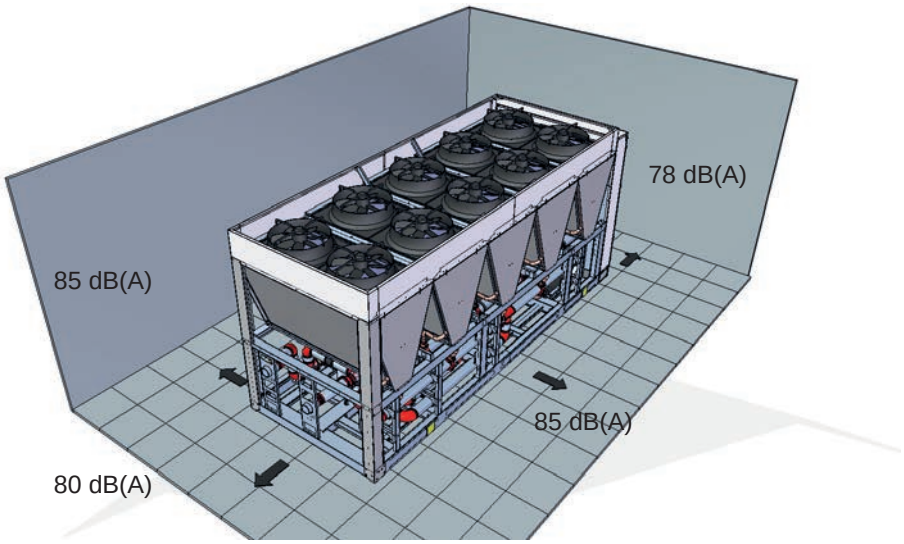

Installation Data

Water System

Chilled water pipe work and ancillary components must be installed in accordance with:

- National and Local Water supply company standards.
- The manufacturer's instructions are followed when fitting ancillary components.
- The system liquid is treated to prevent corrosion and algae forming.
- In ambients of 3°C and below, where static water can be expected, or when water supply temperatures of +5°C or below are required, the necessary concentration of Glycol or use of an electrical trace heater must be included.
- The schematic is referred to as a guide to ancillary recommendations.

CAUTION ⚠	The unit water connections are NOT designed to support external pipe work, pipe work MUST be supported separately.

Grooved & Clamped Type Connection

1. Clamp
2. Gasket
3. Counter pipe

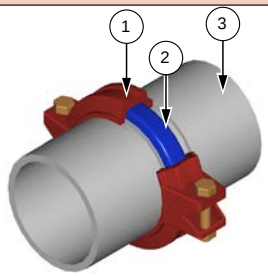

Standard Recommended Installation

General

The following diagram illustrates the minimum component installation requirements. A wide range of optional extras are available to suit various applications.

1	Filter 20 Mesh		
2	Pump	4	Flow switch
3	Pressure sensor	5	Flushing bypass leg

CAUTION ⚠	The following installation recommendations should be adhered to. Failure to do this may invalidate the chiller warranty. The water flow commissioning valve set is not shown in the diagram, as the valve can be fitted elsewhere within the chilled water circuit.

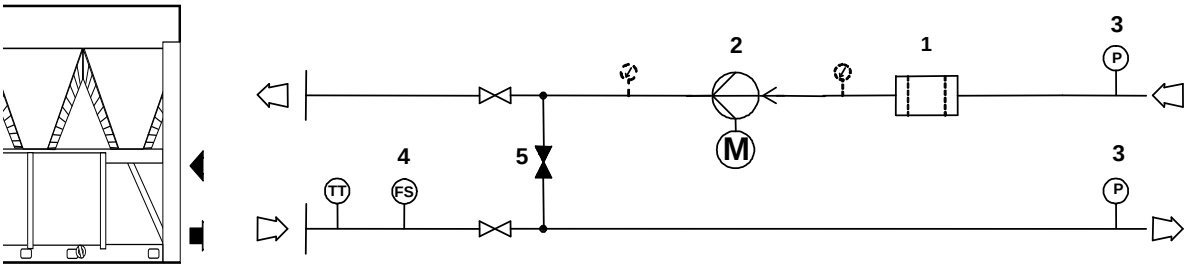

CAUTION ⚠	Full design water flow MUST be maintained at all times. Variable water volume is NOT recommended and will invalidate warranty. The correct operation of the flow proving device is critical if the chiller warranty is to be valid.

Installation Data

System Flushing

Flushing of the water system must occur before the commissioning to protect the unit components from damage. As a good practise, the recommended minimum flushing flow rate should be the design flow rate plus 10%.

Water Treatment Guidelines

Protecting Plant

It is important that the Airedale plant and equipment is properly protected and maintained to ensure optimal system performance.

IMPORTANT ⚠	The equipment and system should be kept clean and free of solid, scale, corrosion and biological fouling. Failure to do so may invalidate the warranty.

Properly maintaining the system can improve energy efficiency and life expectancy. Acceptable water treatment levels for the system should be determined by the water treatment specialist on a project by project, system by system basis. The table below provides a guide to the acceptable range required for Airedale plant, although hardness of water may vary depending on the location of the site.

PH (5oC – 40oC)	7.0 – 8.5	Total Hardness (mg CaCO3/L)	<200
Electrical Conductivity (µs/cm)	<800	Total Iron (mg Fe/l)	<3.0
Chloride (mg Cl/l)	<200	Soluble Iron (mg Fe/l)	<1.0
Alkalinity (mg CaCO3/l)	<100	Ammonium (mg NH4+/l)	<1.0
Sulphate ion (mg S02 4-/l)	<200	Sulphide (mg S2-/l)	<5

When completing a chemical clean or a dynamic flush and dose on the secondary system from the low loss header or buffer vessel, primary units such as chillers, condensers and air conditioning units should have a full-bore bypass installed as close to the plant as possible. The plant should be placed in bypass when carrying out the chemical clean in order to protect sensitive plant items and smaller bore pipes from blockage.

Installers should refer to BG29 2020, Pre-Commissioning cleaning of Pipework Systems for the most up to date guidelines of pre-commissioning cleaning of pipework systems and BSRIA BG50 2013, Water Treatment for Closed Heating and Cooling Systems for ongoing water quality maintenance and systems in operation. The manufacturer is not responsible for damage to or malfunctioning of equipment caused by failure to treat water or by improperly treated system water - this applies to both before and after commissioning. .

Choice of Chemicals

Below is a table of metallic and non-metallic substances found in plant items produced by Airedale.

All chemicals to be used during the water treatment process should be carefully selected by the water treatment specialist so that they do not have a detrimental effect on these items, any component within the plant and equipment or the system as a whole. Frost protection and the dosing of chemicals such as monoethylene and polypropylene should be carefully considered in terms of dosing levels and blended chemical compatibility. Thermal efficiency should also be considered, on a project-by-project basis.

IMPORTANT ⚠	This is not an exhaustive list and specific advice should be sought for individual items of equipment or specific applications, if required.

Copper	Stainless Steel (AISI 302)	Silicon	PA66
Brass	Stainless Steel (AISI 316)	PVC	Neoprene
Cast Bronze	Nickel Plated Brass	PTFE	Nitrile-Butylene Elastomer
Cast Iron	Galvanized Iron	PPS	Ethylene Propylene Rubber
Mild Steel	VITON (Rubber/Silicone mix)	PPE	EPDM
TPE	Synthetic Fibre	PPA 40-GF	Diaphragm

Filling Stage

- Before filling plant items, a visual inspection of valves should take place to ensure that there are no open ends such as drain cocks opened during installation.
- The plant items should be filled with clean water, dosed with corrosion inhibitor and biocides as required in order to prevent corrosion and biological growth. Refer to BSRIA recommendations regarding pre-filling.
- Manual or automatic air vents should be opened to release displaced air from the system during the filling process until pressurised.

Installation Data

Water Systems and Recommended Flow Schemes

The recommended requirements to allow commissioning to be carried out correctly are:

- The inclusion of Binder Points adjacent to the flow and return connections, to allow temperature and pressure readings.
- A flow switch or equivalent, fitted adjacent to the water outlet side of the Chiller.
- A 20 mesh strainer fitted prior to the evaporator inlet.
- A water-flow commissioning valve set fitted to the system.
- In multiple chiller installations, 1 commissioning valve set is required per chiller.
- Air vents are to be installed at all high points and where air is likely to be trapped at intermediate points.
- Drain points are to be installed at all low points in the system and in particular adjacent to the unit for maintenance to be carried out. The unit must be drained for winter shutdown.
- Isolating valves should be installed adjacent to all major items of equipment for ease of maintenance.
- Balancing valves can be installed if required to aid correct system balancing.
- All chilled water pipe work must be insulated and vapour sealed to avoid condensation.
- If several units are installed in parallel adjacent to each other, reverse return should be applied to avoid unnecessary balancing valves.

Pump Statement

When installing circulating water pumps or equipment containing them, the following rules should be applied:

- Ensure the system is filled with water then vented and the pump primed with water before running the pump, this is required because the pumped liquid cools the pump bearings and mechanical seal faces.
- To avoid cavitation the NPSH (Net Positive Suction Head) incorporating a safety margin of 0.5m head must be available at the pump inlet during operation.

Interlocks & Protection

Always electrically interlock the operation of the chiller with the pump controls **and** water flow switch.

CAUTION ⚠	Failure to install both safety devices will invalidate the chiller warranty. Do not rely solely on the BMS to protect the chiller against low flow conditions.

These safety devices prevent the chiller operating with low water flow which can cause serious damage.
An evaporator pump interlock and flow switch MUST be directly wired to the Chiller, refer to ***Interconnecting Wiring***.

Flow Schemes

Basic Supplied Water Schematic - Evaporator only

(Includes Flow Proving Device)

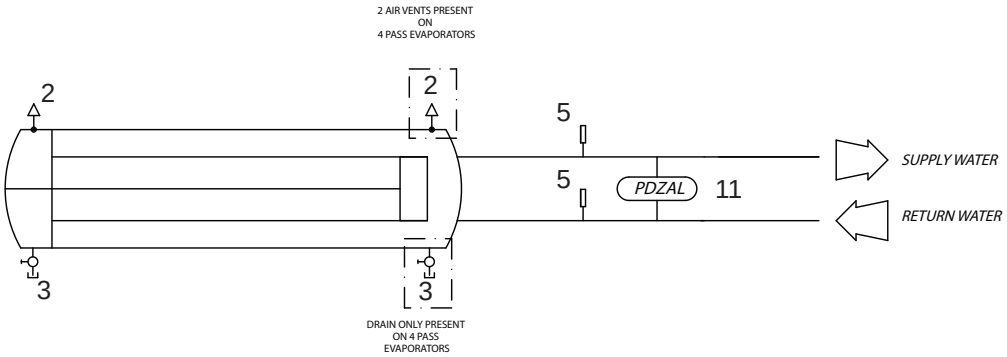

Installation Data

Standard Air Cooled Circuit

Incorporating:

- 20 Mesh Water Filter
- Differential Pressure Transducer
- Shut off Valves

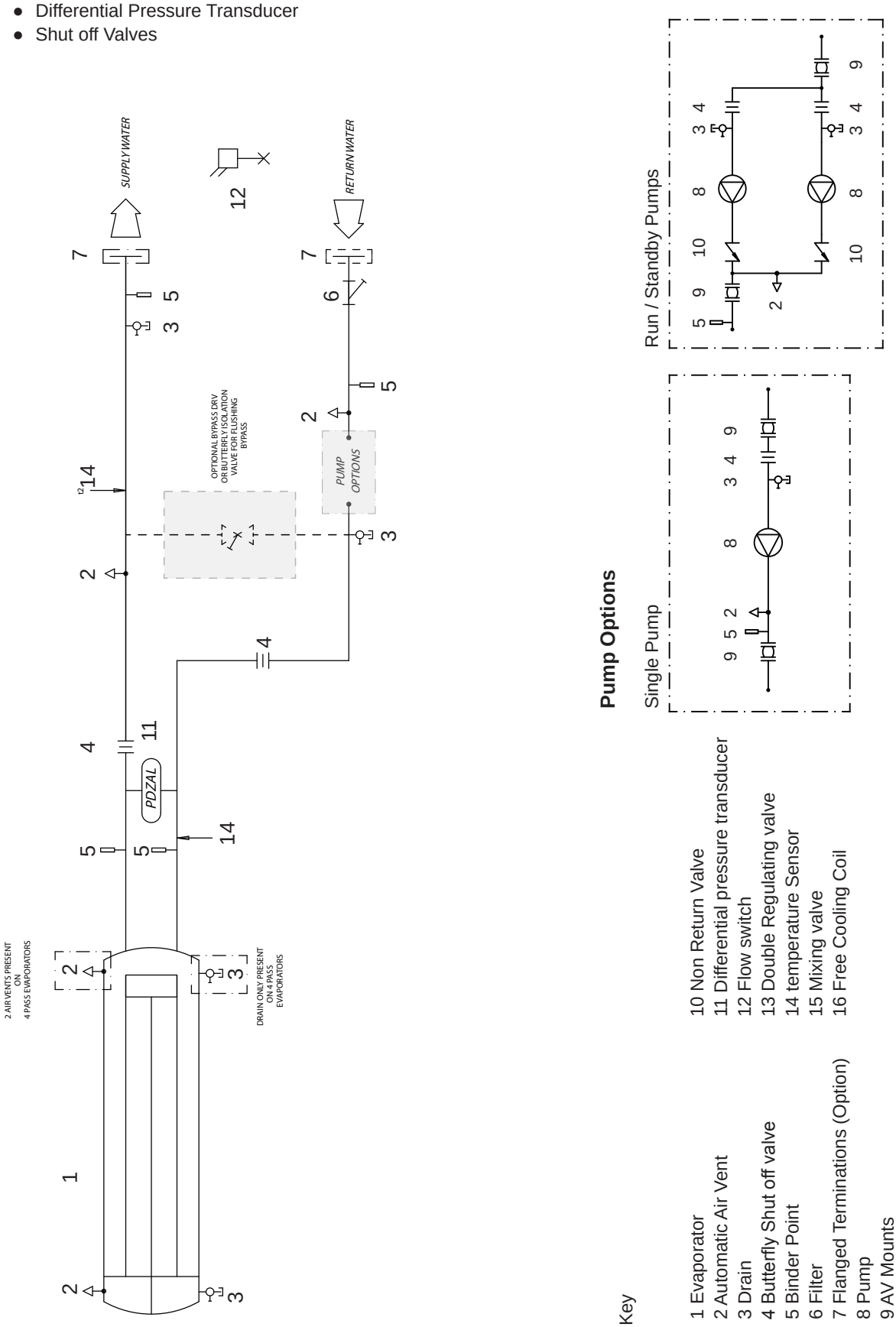

Key

1 Evaporator
2 Automatic Air Vent
3 Drain
4 Butterfly Shut off valve
5 Binder Point
6 Filter
7 Flanged Terminations (Option)
8 Pump
9 AV Mounts
10 Non Return Valve
11 Differential pressure transducer
12 Flow switch
13 Double Regulating valve
14 temperature Sensor
15 Mixing valve
16 Free Cooling Coil

Installation

Installation Data

Standard Free Cool Circuit

Incorporating:

- Double Regulating Valve
- Mixing Valve
- 20 Mesh Water Filter
- Differential Pressure Transducer

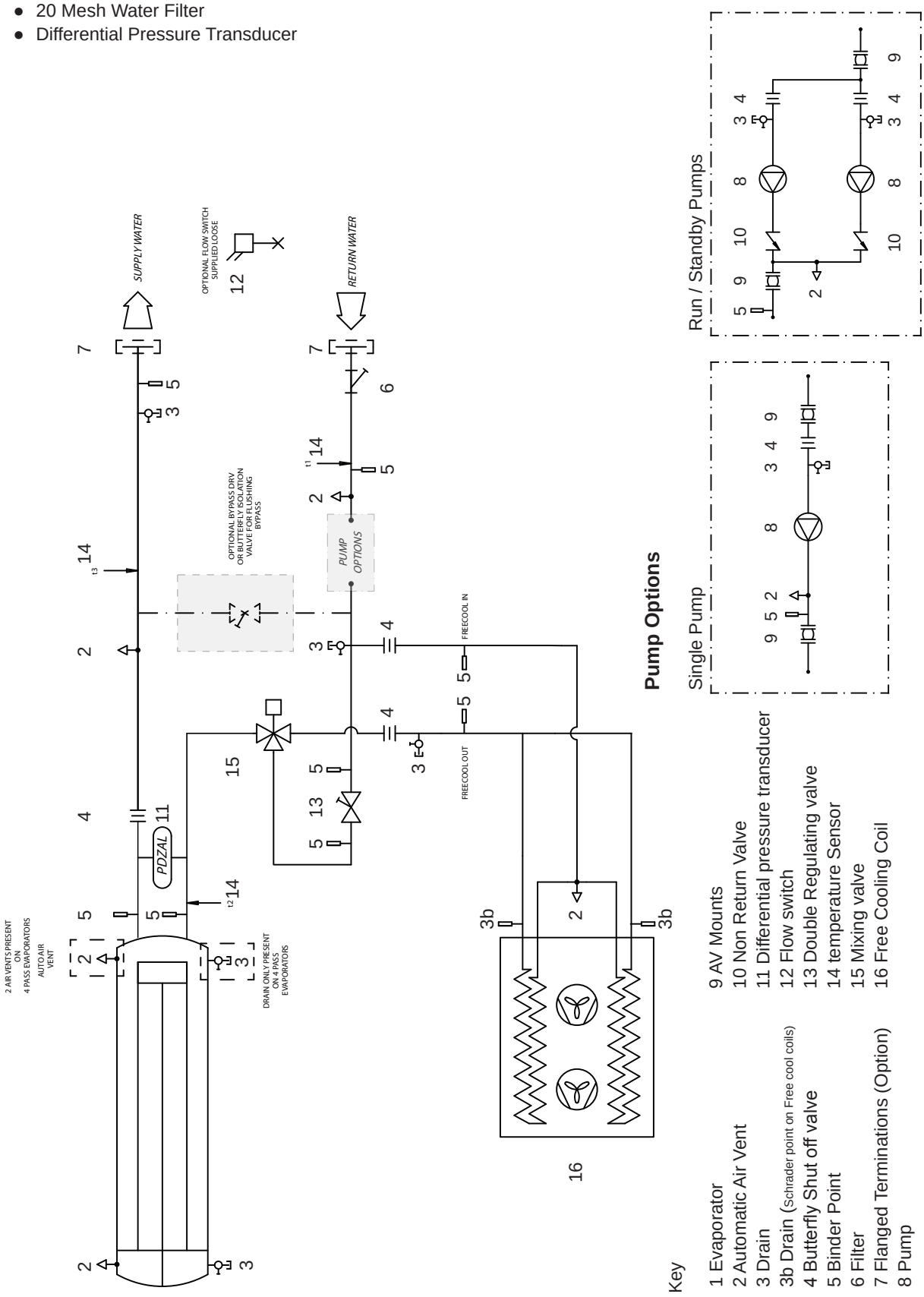

Key

1 Evaporator
2 Automatic Air Vent
3 Drain
3b Drain (Schrader point on Free cool coils)
4 Butterfly Shut off valve
5 Binder Point
6 Filter
7 Flanged Terminations (Option)
8 Pump
9 AV Mounts
10 Non Return Valve
11 Differential pressure transducer
12 Flow switch
13 Double Regulating valve
14 temperature Sensor
15 Mixing valve
16 Free Cooling Coil

Installation

Technical Data - TCC (R) TCC11R04S-01, TCC11R06S-01, TCC11R08S-01

Mechanical

			1	2	3
Mechanical Data	Notes	Units	TCC11R04S-01	TCC11R06S-01	TCC11R08S-01
Cooling Duty - EC Fans	(1)	kW	240	265	275
Nom Input -Cooling Only		kW	70	72	71
EER	(2)		3.41	3.67	3.86
ESEER	(3)		4.61	5.17	5.42
Nominal Output - Free Cooling	(4)	kW	N/A	N/A	N/A
Ambient when Free Cooling = 100% Nominal DX	(5)	°C	N/A	N/A	N/A
Capacity Steps	(6)	%	30-100%	30-100%	30-100%
Dimensions (H x W x L)	(9)	mm	2800 x 2200 x 2626	2800 x 2200 x 3758	2800 x 2200 x 4890
Machine Weight	(7)	kg	2685	3240	3725
Operating Weight	(7)	kg	2800	3360	3850
Construction Material			Base: Plain Galvanised Steel, Panels: Galvanised Sheet Steel, Epoxy Baked Powder Paint, Light Grey (RAL 7035)		
Evaporator - Type			Flooded - Shell and Tube Evaporator		
Insulation			Class O, UV stable Insulation		
Total Max. Water Flow		l/s	22	22	22
Total Min. Water Flow		l/s	7.3	7.3	7.3
Condenser - Type			Epoxy Coated Aluminium Microchannel & Aluminium Fins		
Face Area Total		m²	9.5	14.2	18.9
Maximum Airflow - EC Fans		m³/s	25.3	38.0	50.6
Condenser Fan & Motor			Sickle Bladed Axial Fan		
Quantity			4	6	8
Diameter		mm	800	800	800
Maximum Speed - EC Fans		rpm	1025	1025	1025
Compressor - Type			Turbocor - Oil Free Compressor		
Quantity			1	1	1
Capacity Control			Variable Frequency Drive (VFD) for Linear Capacity Modulation		
Refrigeration			Single Circuit	Single Circuit	Single Circuit
Refrigerant Pre-charged/ GWP			R134a / 1430		
Charge (Total) CCT1 + CCT2		kg	135	145	165
GWP Tonnes Equivalent CO_2			193	207	236
Refrigeration Control			Electronic Expansion Valve (EEV)		
Water System			Grooved Type Coupling and Pipe Assembly		
Water Inlet / Outlet			DN100	DN100	DN100
Water Drain / Bleed - Evap		inch	1/2	1/2	1/2
Water Volume		l	102	102	102
Minimum System Water Volume	(8)	l	1815	1815	1815
Max System Operating Pressure		Barg	10	10	10
Flow Rate		l/s	9.5	10.5	10.9
Pressure Drop		kPa	26.1	30.8	32.8

(1) Based on AC units performance at 13/7°C return/supply temperatures, 35°C ambient, 100% water. All performance data is supplied in accordance with BS EN 14511-1:2013
(2) EER = DX cooling output / (compressor input power + fan input power)
(3) ESEER based upon unit operating at 12 / 7 °C return / supply temperature, 35°C ambient.
(4) Nominal Free Cooling output at 16/10°C return/supply temperatures, 2°C ambient, 20% ethylene glycol.
(5) Ambient temperature that maximum nominal DX duty can be achieved using Free Cooling only.
(6) This is a nominal figure based on full compressor duty, actual turndown depends on both condensing and evaporating temperatures.
(7) Based on standard unit without options, machine weight includes refrigerant charge, operating weight includes refrigerant charge and water volume.
For unit weights with waterside options fitted please contact Airedale.
(8) For minimum system water volume calculation, refer to Design Features & Information - Minimum System Water Volume Calculations.
(9) Height based on standard fan, for optional fan dimensions please contact Airedale

Technical Data

TCC11R04S-01, TCC11R06S-01, TCC11R08S-01

Electrical

			1	2	3
ELECTRICAL DATA			TCC11R04S-01	TCC11R06S-01	TCC11R08S-01
Unit Data					
Full Load Amps	(1)	A	161	168	176
Maximum Start Amps		A	2	2	2
Mains Supply		VAC	400V (±10%) 3PH 50Hz		
Recommended Mains Fuse Size		A	200	200	200
Max Mains Incoming Cable Size (Direct to 3 Phase Mains Isolator)		mm²	2x 300mm² (Torque >20Nm)		
Independent Permanent Supply Recommended Fuse Size		A	25	25	25
Independent Permanent Supply		VAC	230V 1PH 50Hz (±10%)		
Max Permanent Incoming Cable Size (Direct to Control Panel Isolator)		mm²	6mm² / 8 AWG		
Control Circuit		VAC	24 VAC & 230VAC (±10%)		
Evaporator					
Immersion Heater Rating		W	500 (2x 250)	500 (2x 250)	500 (2x 250)
External Trace Heating					
Available (fitted by others)		W	500	500	500
Condenser Fan - Per Fan (EC)					
Quantity			4	6	8
Full Load Amps		A	3.9	3.9	3.9
Locked Rotor Amps		A	N/A	N/A	N/A
Motor Rating		kW	2.56	2.56	2.56
Compressor - Per Compressor					
Nominal Run Amps		A	145	145	145
Quantity			1	1	1
Motor Rating		kW	87	87	87
Start Amps		A	2	2	2
Type Of Start			Electronic Soft Start		

(1) Based at full load Conditions and EC Fans
Pump electrical data is avaliable from Airedale upon request.

Technical Data

TCC11R06L-02, TCC11R08L-03, TCC11R10L-03

Mechanical

			4	5	6
Mechanical Data	Notes	Units	TCC11R06L-02	TCC11R08L-03	TCC11R10L-03
Cooling Duty - EC Fans	(1)	kW	390	425	450
Nom Input -Cooling Only		kW	129	134	139
EER	(2)		3.03	3.16	3.24
ESEER	(3)		4.68	4.82	4.99
Nominal Output - Free Cooling	(4)	kW	N/A	N/A	N/A
Ambient when Free Cooling = 100% Nominal DX	(5)	°C	N/A	N/A	N/A
Capacity Steps	(6)	%	30-100%	30-100%	30-100%
Dimensions (H x W x L)	(9)	mm	2800 x 2200 x 3758	2800 x 2200 x 4890	2800 x 2200 x 6022
Machine Weight	(7)	kg	3415	4225	4805
Operating Weight	(7)	kg	3560	4355	4945
Construction Material			Base: Plain Galvanised Steel, Panels: Galvanised Sheet Steel, Epoxy Baked Powder Paint, Light Grey (RAL 7035)		
Evaporator - Type			Flooded - Shell and Tube Evaporator		
Insulation			Class O, UV stable Insulation		
Total Max. Water Flow		l/s	50	28	28
Total Min. Water Flow		l/s	16.7	9.2	9.2
Condenser - Type			Epoxy Coated Aluminium Microchannel & Aluminium Fins		
Face Area Total		m²	14.2	18.9	23.7
Maximum Airflow - EC Fans		m³/s	38.0	50.6	63.3
Condenser Fan & Motor			Sickle Bladed Axial Fan		
Quantity			6	8	10
Diameter		mm	800	800	800
Maximum Speed - EC Fans		rpm	1025	1025	1025
Compressor - Type			Turbocor - Oil Free Compressor		
Quantity			1	1	1
Capacity Control			Variable Frequency Drive (VFD) for Linear Capacity Modulation		
Refrigeration			Single Circuit	Single Circuit	Single Circuit
Refrigerant Pre-charged/ GWP			R134a / 1430		
Charge (Total) CCT1 + CCT2		kg	170	320	340
GWP Tonnes Equivalent CO_2			243	458	486
Refrigeration Control			Electronic Expansion Valve (EEV)		
Water System			Grooved Type Coupling and Pipe Assembly		
Water Inlet / Outlet			DN100	DN100	DN100
Water Drain / Bleed - Evap		inch	1/2	1/2	1/2
Water Volume		l	126	114	114
Minimum System Water Volume	(8)	l	2695	2683	2683
Max System Operating Pressure		Barg	10	10	10
Flow Rate		l/s	15.5	16.9	17.8
Pressure Drop		kPa	8.7	41.4	45.7

(1) Based on AC units performance at 13/7°C return/supply temperatures, 35°C ambient, 100% water. All performance data is supplied in accordance with BS EN 14511-1:2013
(2) EER = DX cooling output / (compressor input power + fan input power)
(3) ESEER based upon unit operating at 12 / 7 °C return / supply temperature, 35°C ambient.
(4) Nominal Free Cooling output at 16/10°C return/supply temperatures, 2°C ambient, 20% ethylene glycol.
(5) Ambient temperature that maximum nominal DX duty can be achieved using Free Cooling only.
(6) This is a nominal figure based on full compressor duty, actual turndown depends on both condensing and evaporating temperatures.
(7) Based on standard unit without options, machine weight includes refrigerant charge, operating weight includes refrigerant charge and water volume.
For unit weights with waterside options fitted please contact Airedale.
(8) For minimum system water volume calculation, refer to Design Features & Information - Minimum System Water Volume Calculations.
(9) Height based on standard fan, for optional fan dimensions please contact Airedale

Technical Data

TCC11R06L-02, TCC11R08L-03, TCC11R10L-03

Electrical

			4	5	6
ELECTRICAL DATA			TCC11R06L-02	TCC11R08L-03	TCC11R10L-03
Unit Data					
Full Load Amps	(1)	A	233	241	249
Maximum Start Amps		A	2	2	2
Mains Supply		VAC	400V (±10%) 3PH 50Hz		
Recommended Mains Fuse Size		A	250	315	315
Max Mains Incoming Cable Size (Direct to 3 Phase Mains Isolator)		mm²	2x 300mm² (Torque >20Nm)		
Independent Permanent Supply Recommended Fuse Size		A	25	25	25
Independent Permanent Supply		VAC	230V 1PH 50Hz (±10%)		
Max Permanent Incoming Cable Size (Direct to Control Panel Isolator)		mm²	6mm² / 8 AWG		
Control Circuit		VAC	24 VAC & 230VAC (±10%)		
Evaporator					
Immersion Heater Rating		W	500 (2x 250)	500 (2x 250)	500 (2x 250)
External Trace Heating					
Available (fitted by others)		W	500	500	500
Condenser Fan - Per Fan (EC)					
Quantity			6	8	10
Full Load Amps		A	3.9	3.9	3.9
Locked Rotor Amps		A	N/A	N/A	N/A
Motor Rating		kW	2.56	2.56	2.56
Compressor - Per Compressor					
Nominal Run Amps		A	210	210	210
Quantity			1	1	1
Motor Rating		kW	129	129	129
Start Amps		A	2	2	2
Type Of Start			Electronic Soft Start		

(1) Based at full load Conditions and EC Fans
Pump electrical data is avaliable from Airedale upon request.

Technical Data

TCC12R08S-04, TCC12R10S-04, TCC12R12S-04

Mechanical

			7	8	9
Mechanical Data	Notes	Units	TCC12R08S-04	TCC12R10S-04	TCC12R12S-04
Cooling Duty - EC Fans	(1)	kW	470	500	530
Nom Input -Cooling Only		kW	141	144	150
EER	(2)		3.32	3.47	3.54
ESEER	(3)		4.47	5.11	5.37
Nominal Output - Free Cooling	(4)	kW	N/A	N/A	N/A
Ambient when Free Cooling = 100% Nominal DX	(5)	°C	N/A	N/A	N/A
Capacity Steps	(6)	%	15-100%	15-100%	15-100%
Dimensions (H x W x L)	(9)	mm	2800 x 2200 x 4890	2800 x 2200 x 6022	2800 x 2200 x 7154
Machine Weight	(7)	kg	4645	5190	5765
Operating Weight	(7)	kg	4810	5350	5925
Construction Material			Base: Plain Galvanised Steel, Panels: Galvanised Sheet Steel, Epoxy Baked Powder Paint, Light Grey (RAL 7035)		
Evaporator - Type			Flooded - Shell and Tube Evaporator		
Insulation			Class O, UV stable Insulation		
Total Max. Water Flow		l/s	41	41	41
Total Min. Water Flow		l/s	13.3	13.3	13.3
Condenser - Type			Epoxy Coated Aluminium Microchannel & Aluminium Fins		
Face Area Total		m²	18.9	23.7	28.4
Maximum Airflow - EC Fans		m³/s	50.6	63.3	75.9
Condenser Fan & Motor			Sickle Bladed Axial Fan		
Quantity			8	10	12
Diameter		mm	800	800	800
Maximum Speed - EC Fans		rpm	1025	1025	1025
Compressor - Type			Turbocor - Oil Free Compressor		
Quantity			2	2	2
Capacity Control			Variable Frequency Drive (VFD) for Linear Capacity Modulation		
Refrigeration			Single Circuit	Single Circuit	Single Circuit
Refrigerant Pre-charged/ GWP			R134a / 1430		
Charge (Total) CCT1 + CCT2		kg	295	310	330
GWP Tonnes Equivalent CO_2			422	443	472
Refrigeration Control			Electronic Expansion Valve (EEV)		
Water System			Grooved Type Coupling and Pipe Assembly		
Water Inlet / Outlet			DN125	DN125	DN125
Water Drain / Bleed - Evap		inch	1/2	1/2	1/2
Water Volume		l	141	141	141
Minimum System Water Volume	(8)	l	1853	1853	1853
Max System Operating Pressure		Barg	10	10	10
Flow Rate		l/s	18.6	19.8	21.0
Pressure Drop		kPa	26.0	28.8	31.8

(1) Based on AC units performance at 13/7°C return/supply temperatures, 35°C ambient, 100% water. All performance data is supplied in accordance with BS EN 14511-1:2013
(2) EER = DX cooling output / (compressor input power + fan input power)
(3) ESEER based upon unit operating at 12 / 7 °C return / supply temperature, 35°C ambient.
(4) Nominal Free Cooling output at 16/10°C return/supply temperatures, 2°C ambient, 20% ethylene glycol.
(5) Ambient temperature that maximum nominal DX duty can be achieved using Free Cooling only.
(6) This is a nominal figure based on full compressor duty, actual turndown depends on both condensing and evaporating temperatures.
(7) Based on standard unit without options, machine weight includes refrigerant charge, operating weight includes refrigerant charge and water volume.
For unit weights with waterside options fitted please contact Airedale.
(8) For minimum system water volume calculation, refer to Design Features & Information - Minimum System Water Volume Calculations.
(9) Height based on standard fan, for optional fan dimensions please contact Airedale

Technical Data

TCC12R08S-04, TCC12R10S-04, TCC12R12S-04

Electrical

			7	8	9
ELECTRICAL DATA			TCC12R08S-04	TCC12R10S-04	TCC12R12S-04
Unit Data					
Full Load Amps	(1)	A	321	329	337
Maximum Start Amps		A	176	184	192
Mains Supply		VAC	400V (±10%) 3PH 50Hz		
Recommended Mains Fuse Size		A	355	355	355
Max Mains Incoming Cable Size (Direct to 3 Phase Mains Isolator)		mm²	2x 300mm² (Torque >20Nm)		
Independent Permanent Supply Recommended Fuse Size		A	25	25	25
Independent Permanent Supply		VAC	230V 1PH 50Hz (±10%)		
Max Permanent Incoming Cable Size (Direct to Control Panel Isolator)		mm²	6mm² / 8 AWG		
Control Circuit		VAC	24 VAC & 230VAC (±10%)		
Evaporator					
Immersion Heater Rating		W	500 (2x 250)	500 (2x 250)	500 (2x 250)
External Trace Heating					
Available (fitted by others)		W	500	500	500
Condenser Fan - Per Fan (EC)					
Quantity			8	10	12
Full Load Amps		A	3.9	3.9	3.9
Locked Rotor Amps		A	N/A	N/A	N/A
Motor Rating		kW	2.56	2.56	2.56
Compressor - Per Compressor					
Nominal Run Amps		A	145	145	145
Quantity			2	2	2
Motor Rating		kW	87	87	87
Start Amps		A	2	2	2
Type Of Start			Electronic Soft Start		

(1) Based at full load Conditions and EC Fans
Pump electrical data is avaliable from Airedale upon request.

Technical Data

TCC12R14S-04, TCC12R10L-05, TCC12R12L-06

Mechanical

			10	11	12
Mechanical Data	Notes	Units	TCC12R14S-04	TCC12R10L-05	TCC12R12L-06
Cooling Duty - EC Fans	(1)	kW	560	600	670
Nom Input -Cooling Only		kW	156	197	212
EER	(2)		3.58	3.05	3.16
ESEER	(3)		5.41	4.82	4.91
Nominal Output - Free Cooling	(4)	kW	N/A	N/A	N/A
Ambient when Free Cooling = 100% Nominal DX	(5)	°C	N/A	N/A	N/A
Capacity Steps	(6)	%	15-100%	15-100%	15-100%
Dimensions (H x W x L)	(9)	mm	2800 x 2200 x 8286	2800 x 2200 x 6022	2800 x 2200 x 7154
Machine Weight	(7)	kg	6550	5290	6325
Operating Weight	(7)	kg	6725	5480	6565
Construction Material			Base: Plain Galvanised Steel, Panels: Galvanised Sheet Steel, Epoxy Baked Powder Paint, Light Grey (RAL 7035)		
Evaporator - Type			Flooded - Shell and Tube Evaporator		
Insulation			Class O, UV stable Insulation		
Total Max. Water Flow		l/s	41	50	59
Total Min. Water Flow		l/s	13.3	16.7	19.4
Condenser - Type			Epoxy Coated Aluminium Microchannel & Aluminium Fins		
Face Area Total		m²	33.2	23.7	28.4
Maximum Airflow - EC Fans		m³/s	88.6	63.3	75.9
Condenser Fan & Motor			Sickle Bladed Axial Fan		
Quantity			14	10	12
Diameter		mm	800	800	800
Maximum Speed - EC Fans		rpm	1025	1025	1025
Compressor - Type			Turbocor - Oil Free Compressor		
Quantity			2	2	2
Capacity Control			Variable Frequency Drive (VFD) for Linear Capacity Modulation		
Refrigeration			Single Circuit	Single Circuit	Single Circuit
Refrigerant Pre-charged/ GWP			R134a / 1430		
Charge (Total) CCT1 + CCT2		kg	340	290	445
GWP Tonnes Equivalent CO_2			486	415	636
Refrigeration Control			Electronic Expansion Valve (EEV)		
Water System			Grooved Type Coupling and Pipe Assembly		
Water Inlet / Outlet			DN125	DN150	DN150
Water Drain / Bleed - Evap		inch	1/2	1/2	1/2
Water Volume		l	141	161	219
Minimum System Water Volume	(8)	l	1853	2730	2788
Max System Operating Pressure		Barg	10	10	10
Flow Rate		l/s	22.2	23.8	26.6
Pressure Drop		kPa	35.0	27.5	25.0

(1) Based on AC units performance at 13/7°C return/supply temperatures, 35°C ambient, 100% water. All performance data is supplied in accordance with BS EN 14511-1:2013
(2) EER = DX cooling output / (compressor input power + fan input power)
(3) ESEER based upon unit operating at 12 / 7 °C return / supply temperature, 35°C ambient.
(4) Nominal Free Cooling output at 16/10°C return/supply temperatures, 2°C ambient, 20% ethylene glycol.
(5) Ambient temperature that maximum nominal DX duty can be achieved using Free Cooling only.
(6) This is a nominal figure based on full compressor duty, actual turndown depends on both condensing and evaporating temperatures.
(7) Based on standard unit without options, machine weight includes refrigerant charge, operating weight includes refrigerant charge and water volume.
For unit weights with waterside options fitted please contact Airedale.
(8) For minimum system water volume calculation, refer to Design Features & Information - Minimum System Water Volume Calculations.
(9) Height based on standard fan, for optional fan dimensions please contact Airedale

Technical Data

TCC12R14S-04, TCC12R10L-05, TCC12R12L-06

Electrical

			10	11	12
ELECTRICAL DATA			TCC12R14S-04	TCC12R10L-05	TCC12R12L-05
Unit Data					
Full Load Amps	(1)	A	345	459	467
Maximum Start Amps		A	200	249	257
Mains Supply		VAC	400V (±10%) 3PH 50Hz		
Recommended Mains Fuse Size		A	355	500	500
Max Mains Incoming Cable Size (Direct to 3 Phase Mains Isolator)		mm²	2x 300mm² (Torque >20Nm)		
Independent Permanent Supply Recommended Fuse Size		A	25	25	25
			230V 1PH 50Hz (±10%)		
Max Permanent Incoming Cable Size (Direct to Control Panel Isolator)		mm²	6mm² / 8 AWG		
Control Circuit		VAC	24 VAC & 230VAC (±10%)		
Evaporator					
Immersion Heater Rating		W	500 (2x 250)	500 (2x 250)	500 (2x 250)
External Trace Heating					
Available (fitted by others)		W	500	500	500
Condenser Fan - Per Fan (EC)					
Quantity			14	10	12
Full Load Amps		A	3.9	3.9	3.9
Locked Rotor Amps		A	N/A	N/A	N/A
Motor Rating		kW	2.56	2.56	2.56
Compressor - Per Compressor					
Nominal Run Amps		A	145	210	210
Quantity			2	2	2
Motor Rating		kW	87	129	129
Start Amps		A	2	2	2
Type Of Start			Electronic Soft Start		

(1) Based at full load Conditions and EC Fans
Pump electrical data is avaliable from Airedale upon request.

Technical Data

TCC12R14L-06, TCC12R16L-06, TCC12R18L-06, TCC12R20L-06

Mechanical

			13	14	15	16
Mechanical Data	Notes	Units	TCC12R14L-06	TCC12R16L-06	TCC12R18L-06	TCC12R20L-06
Cooling Duty - EC Fans	(1)	kW	750	800	850	900
Nom Input -Cooling Only		kW	238	252	275	294
EER	(2)		3.15	3.17	3.09	3.06
ESEER	(3)		4.99	5.04	5.04	5.02
Nominal Output - Free Cooling	(4)	kW	N/A	N/A	N/A	N/A
Ambient when Free Cooling = 100% Nominal DX	(5)	°C	N/A	N/A	N/A	N/A
Capacity Steps	(6)	%	15-100%	15-100%	15-100%	15-100%
Dimensions (H x W x L)	(9)	mm	2800 x 2200 x 8286	2800 x 2200 x 9418	2800 x 2200 x 10550	2800 x 2200 x 11682
Machine Weight	(7)	kg	7110	7490	8345	8965
Operating Weight	(7)	kg	7355	7735	8605	9220
Construction Material			Base: Plain Galvanised Steel, Panels: Galvanised Sheet Steel, Epoxy Baked Powder Paint, Light Grey (RAL 7035)			
Evaporator - Type			Flooded - Shell and Tube Evaporator			
Insulation			Class O, UV stable Insulation			
Total Max. Water Flow		l/s	59	59	59	59
Total Min. Water Flow		l/s	19.4	19.4	19.4	19.4
Condenser - Type			Epoxy Coated Aluminium Microchannel & Aluminium Fins			
Face Area Total		m²	33.2	37.9	42.6	47.4
Maximum Airflow - EC Fans		m³/s	88.6	101.2	113.9	126.5
Condenser Fan & Motor			Sickle Bladed Axial Fan			
Quantity			14	16	18	20
Diameter		mm	800	800	800	800
Maximum Speed - EC Fans		rpm	1025	1025	1025	1025
Compressor - Type			Turbocor - Oil Free Compressor			
Quantity			2	2	2	2
Capacity Control			Variable Frequency Drive (VFD) for Linear Capacity Modulation			
Refrigeration			Single Circuit	Single Circuit	Single Circuit	Single Circuit
Refrigerant Pre-charged/ GWP			R134a / 1430			
Charge (Total) CCT1 + CCT2		kg	460	475	480	495
GWP Tonnes Equivalent CO_2			658	679	686	708
Refrigeration Control			Electronic Expansion Valve (EEV)			
Water System			Grooved Type Coupling and Pipe Assembly			
Water Inlet / Outlet			DN150	DN150	DN150	DN150
Water Drain / Bleed - Evap		inch	1/2	1/2	1/2	1/2
Water Volume		l	219	219	219	219
Minimum System Water Volume	(8)	l	2788	2788	2788	2788
Max System Operating Pressure		Barg	10	10	10	10
Flow Rate		l/s	29.7	31.7	33.7	35.7
Pressure Drop		kPa	30.4	34.1	37.9	42.0

(1) Based on AC units performance at 13/7°C return/supply temperatures, 35°C ambient, 100% water. All performance data is supplied in accordance with BS EN 14511-1:2013
(2) EER = DX cooling output / (compressor input power + fan input power)
(3) ESEER based upon unit operating at 12 / 7 °C return / supply temperature, 35°C ambient.
(4) Nominal Free Cooling output at 16/10°C return/supply temperatures, 2°C ambient, 20% ethylene glycol.
(5) Ambient temperature that maximum nominal DX duty can be achieved using Free Cooling only.
(6) This is a nominal figure based on full compressor duty, actual turndown depends on both condensing and evaporating temperatures.
(7) Based on standard unit without options, machine weight includes refrigerant charge, operating weight includes refrigerant charge and water volume. For unit weights with waterside options fitted please contact Airedale.
(8) For minimum system water volume calculation, refer to Design Features & Information - Minimum System Water Volume Calculations.
(9) Height based on standard fan, for optional fan dimensions please contact Airedale

Technical Data

TCC12R14L-06, TCC12R16L-06, TCC12R18L-06, TCC12R20L-06

Electrical

			13	14	15	16
ELECTRICAL DATA			TCC12R14L-06	TCC12R16L-06	TCC12R18L-06	TCC12R20L-06
Unit Data						
Full Load Amps	(1)	A	475	482	490	498
Maximum Start Amps		A	265	272	280	288
Mains Supply		VAC	400V (±10%) 3PH 50Hz			
Recommended Mains Fuse Size		A	500	500	560	560
Max Mains Incoming Cable Size (Direct to 3 Phase Mains Isolator)		mm²	2x 300mm² (Torque >20Nm)			
Independent Permanent Supply Recommended Fuse Size		A	25	25	25	25
Independent Permanent Supply			230V 1PH 50Hz (±10%)			
Max Permanent Incoming Cable Size (Direct to Control Panel Isolator)		mm²	6mm² / 8 AWG			
Control Circuit		VAC	24 VAC & 230VAC (±10%)			
Evaporator						
Immersion Heater Rating		W	500 (2x 250)	500 (2x 250)	500 (2x 250)	500 (2x 250)
External Trace Heating						
Available (fitted by others)		W	500	500	500	500
Condenser Fan - Per Fan (EC)						
Quantity			14	16	18	20
Full Load Amps		A	3.9	3.9	3.9	3.9
Locked Rotor Amps		A	N/A	N/A	N/A	N/A
Motor Rating		kW	2.56	2.56	2.56	2.56
Compressor - Per Compressor						
Nominal Run Amps		A	210	210	210	210
Quantity			2	2	2	2
Motor Rating		kW	129	129	129	129
Start Amps		A	2	2	2	2
Type Of Start			Electronic Soft Start			

(1) Based at full load Conditions and EC Fans
Pump electrical data is avaliable from Airedale upon request.

Technical Data

TCC22R08S-14, TCC22R10S-14, TCC22R12S-14, TCC22R14S-14

Mechanical

			17	18	19	20
Mechanical Data	Notes	Units	TCC22R08S-14	TCC22R10S-14	TCC22R12S-14	TCC22R14S-14
Cooling Duty - EC Fans	(1)	kW	470	500	530	560
Nom Input -Cooling Only		kW	140	142	147	154
EER	(2)		3.36	3.52	3.60	3.64
ESEER	(3)		4.30	4.95	5.14	5.21
Nominal Output - Free Cooling	(4)	kW	N/A	N/A	N/A	N/A
Ambient when Free Cooling = 100% Nominal DX	(5)	°C	N/A	N/A	N/A	N/A
Capacity Steps	(6)	%	15-100%	15-100%	15-100%	15-100%
Dimensions (H x W x L)	(9)	mm	2800 x 2200 x 4890	2800 x 2200 x 6022	2800 x 2200 x 7154	2800 x 2200 x 8286
Machine Weight	(7)	kg	4760	5390	5860	6500
Operating Weight	(7)	kg	4900	5530	6000	6640
Construction Material			Base: Plain Galvanised Steel, Panels: Galvanised Sheet Steel, Epoxy Baked Powder Paint, Light Grey (RAL 7035)			
Evaporator - Type			Flooded - Shell and Tube Evaporator			
Insulation			Class O, UV stable Insulation			
Total Max. Water Flow		l/s	44	44	44	44
Total Min. Water Flow		l/s	14.6	14.6	14.6	14.6
Condenser - Type			Epoxy Coated Aluminium Microchannel & Aluminium Fins			
Face Area Total		m²	18.9	23.7	28.4	33.2
Maximum Airflow - EC Fans		m³/s	50.6	63.3	75.9	88.6
Condenser Fan & Motor			Sickle Bladed Axial Fan			
Quantity			8	10	12	14
Diameter		mm	800	800	800	800
Maximum Speed - EC Fans		rpm	1025	1025	1025	1025
Compressor - Type			Turbocor - Oil Free Compressor			
Quantity			2	2	2	2
Capacity Control			Variable Frequency Drive (VFD) for Linear Capacity Modulation			
Refrigeration			Dual Circuit	Dual Circuit	Dual Circuit	Dual Circuit
Refrigerant Pre-charged/ GWP			R134a / 1430			
Charge (Total) CCT1 + CCT2		kg	155 + 150	160 + 160	170 + 165	180 + 170
GWP Tonnes Equivalent CO_2			221.65 + 214.5	228.8 + 228.8	243.1 + 235.95	257.4 + 243.1
Refrigeration Control			Electronic Expansion Valve (EEV)			
Water System			Grooved Type Coupling and Pipe Assembly			
Water Inlet / Outlet			DN125	DN125	DN125	DN125
Water Drain / Bleed - Evap		inch	1/2	1/2	1/2	1/2
Water Volume		l	148	148	148	148
Minimum System Water Volume	(8)	l	1860.1	1860.1	1860.1	1860.1
Max System Operating Pressure		Barg	10	10	10	10
Flow Rate		l/s	18.6	19.8	21.0	22.2
Pressure Drop		kPa	22.5	25.1	27.8	30.6

(1) Based on AC units performance at 13/7°C return/supply temperatures, 35°C ambient, 100% water. All performance data is supplied in accordance with BS EN 14511-1:2013
(2) EER = DX cooling output / (compressor input power + fan input power)
(3) ESEER based upon unit operating at 12 / 7 °C return / supply temperature, 35°C ambient.
(4) Nominal Free Cooling output at 16/10°C return/supply temperatures, 2°C ambient, 20% ethylene glycol.
(5) Ambient temperature that maximum nominal DX duty can be achieved using Free Cooling only.
(6) This is a nominal figure based on full compressor duty, actual turndown depends on both condensing and evaporating temperatures.
(7) Based on standard unit without options, machine weight includes refrigerant charge, operating weight includes refrigerant charge and water volume. For unit weights with waterside options fitted please contact Airedale.
(8) For minimum system water volume calculation, refer to Design Features & Information - Minimum System Water Volume Calculations.
(9) Height based on standard fan, for optional fan dimensions please contact Airedale

Technical Data

TCC22R08S-14, TCC22R10S-14, TCC22R12S-14, TCC22R14S-14

Electrical

			17	18	19	20
ELECTRICAL DATA			TCC22R08S-14	TCC22R10S-14	TCC22R12S-14	TCC22R14S-14
Unit Data						
Full Load Amps	(1)	A	321	329	337	345
Maximum Start Amps		A	176	184	192	200
Mains Supply		VAC	400V (±10%) 3PH 50Hz			
Recommended Mains Fuse Size		A	355	355	355	355
Max Mains Incoming Cable Size (Direct to 3 Phase Mains Isolator)		mm²	2x 300mm² (Torque >20Nm)			
Independent Permanent Supply Recommended Fuse Size		A	25	25	25	25
Independent Permanent Supply			230V 1PH 50Hz (±10%)			
Max Permanent Incoming Cable Size (Direct to Control Panel Isolator)		mm²	6mm² / 8 AWG			
Control Circuit		VAC	24 VAC & 230VAC (±10%)			
Evaporator						
Immersion Heater Rating		W	340 (2x 170)	340 (2x 170)	340 (2x 170)	340 (2x 170)
External Trace Heating						
Available (fitted by others)		W	500	500	500	500
Condenser Fan - Per Fan (EC)						
Quantity			8	10	12	**14**
Full Load Amps		A	3.9	3.9	3.9	3.9
Locked Rotor Amps		A	N/A	N/A	N/A	N/A
Motor Rating		kW	2.56	2.56	2.56	2.56
Compressor - Per Compressor						
Nominal Run Amps		A	145	145	145	**145**
Quantity			2	2	2	2
Motor Rating		kW	87	87	87	87
Start Amps		A	2	2	2	2
Type Of Start			Electronic Soft Start			

(1) Based at full load Conditions and EC Fans
Pump electrical data is avaliable from Airedale upon request.

Technical Data

TCC22R10L-15, TCC22R12L-15, TCC122R14L-15

Mechanical

			21	22	23
Mechanical Data	Notes	Units	TCC22R10L-15	TCC22R12L-15	TCC22R14L-15
Cooling Duty - EC Fans	(1)	kW	600	670	750
Nom Input -Cooling Only		kW	192	206	230
EER	(2)		3.13	3.25	3.26
ESEER	(3)		4.20	4.44	4.78
Nominal Output - Free Cooling	(4)	kW	N/A	N/A	N/A
Ambient when Free Cooling = 100% Nominal DX	(5)	°C	N/A	N/A	N/A
Capacity Steps	(6)	%	15-100%	15-100%	15-100%
Dimensions (H x W x L)	(9)	mm	2800 x 2200 x 6022	2800 x 2200 x 7154	2800 x 2200 x 8286
Machine Weight	(7)	kg	5910	6400	7030
Operating Weight	(7)	kg	6120	6610	7240
Construction Material			Base: Plain Galvanised Steel, Panels: Galvanised Sheet Steel, Epoxy Baked Powder Paint, Light Grey (RAL 7035)		
Evaporator - Type			Flooded - Shell and Tube Evaporator		
Insulation			Class O, UV stable Insulation		
Total Max. Water Flow		l/s	59	59	59
Total Min. Water Flow		l/s	19.7	19.7	19.7
Condenser - Type			Epoxy Coated Aluminium Microchannel & Aluminium Fins		
Face Area Total		m²	23.7	28.4	33.2
Maximum Airflow - EC Fans		m³/s	63.3	75.9	88.6
Condenser Fan & Motor			Sickle Bladed Axial Fan		
Quantity			10	12	14
Diameter		mm	800	800	800
Maximum Speed - EC Fans		rpm	1025	1025	1025
Compressor - Type			Turbocor - Oil Free Compressor		
Quantity			2	2	2
Capacity Control			Variable Frequency Drive (VFD) for Linear Capacity Modulation		
Refrigeration			Dual Circuit	Dual Circuit	Dual Circuit
Refrigerant Pre-charged/ GWP			R134a / 1430		
Charge (Total) CCT1 + CCT2		kg	220 + 220	230 + 225	235 + 230
GWP Tonnes Equivalent CO_2			314.6 + 314.6	328.9 + 321.75	336.05 + 328.9
Refrigeration Control			Electronic Expansion Valve (EEV)		
Water System			Grooved Type Coupling and Pipe Assembly		
Water Inlet / Outlet			DN150	DN150	DN150
Water Drain / Bleed - Evap		inch	1/2	1/2	1/2
Water Volume		l	219	219	219
Minimum System Water Volume	(8)	l	2788	2788	2788
Max System Operating Pressure		Barg	10	10	10
Flow Rate		l/s	23.8	26.6	29.7
Pressure Drop		kPa	20.3	24.8	30.2

(1) Based on AC units performance at 13/7°C return/supply temperatures, 35°C ambient, 100% water. All performance data is supplied in accordance with BS EN 14511-1:2013
(2) EER = DX cooling output / (compressor input power + fan input power)
(3) ESEER based upon unit operating at 12 / 7 °C return / supply temperature, 35°C ambient.
(4) Nominal Free Cooling output at 16/10°C return/supply temperatures, 2°C ambient, 20% ethylene glycol.
(5) Ambient temperature that maximum nominal DX duty can be achieved using Free Cooling only.
(6) This is a nominal figure based on full compressor duty, actual turndown depends on both condensing and evaporating temperatures.
(7) Based on standard unit without options, machine weight includes refrigerant charge, operating weight includes refrigerant charge and water volume. For unit weights with waterside options fitted please contact Airedale.
(8) For minimum system water volume calculation, refer to Design Features & Information - Minimum System Water Volume Calculations.
(9) Height based on standard fan, for optional fan dimensions please contact Airedale

Technical Data

TCC22R10L-15, TCC22R12L-15, TCC122R14L-15

Electrical

			21	22	23
ELECTRICAL DATA			TCC22R10L-15	TCC22R12L-15	TCC22R14L-15
Unit Data					
Full Load Amps	(1)	A	459	467	475
Maximum Start Amps		A	249	257	265
Mains Supply		VAC	400V (±10%) 3PH 50Hz		
Recommended Mains Fuse Size		A	500	500	500
Max Mains Incoming Cable Size (Direct to 3 Phase Mains Isolator)		mm²	2x 300mm² (Torque >20Nm)		
Independent Permanent Supply Recommended Fuse Size		A	25	25	25
Independent Permanent Supply		VAC	230V 1PH 50Hz (±10%)		
Max Permanent Incoming Cable Size (Direct to Control Panel Isolator)		mm²	6mm² / 8 AWG		
Control Circuit		VAC	24 VAC & 230VAC (±10%)		
Evaporator					
Immersion Heater Rating		W	340 (2x 170)	340 (2x 170)	340 (2x 170)
External Trace Heating					
Available (fitted by others)		W	500	500	500
Condenser Fan - Per Fan (EC)					
Quantity			10	12	14
Full Load Amps		A	3.9	3.9	3.9
Locked Rotor Amps		A	N/A	N/A	N/A
Motor Rating		kW	2.56	2.56	2.56
Compressor - Per Compressor					
Nominal Run Amps		A	210	210	210
Quantity			2	2	2
Motor Rating		kW	129	129	129
Start Amps		A	2	2	2
Type Of Start			Electronic Soft Start		

(1) Based at full load Conditions and EC Fans
Pump electrical data is avaliable from Airedale upon request.

Technical Data

TCC22R16L-16, TCC22R18L-16, TCC22R20L-16

Mechanical

			24	25	26
Mechanical Data	Notes	Units	TCC22R16L-16	TCC22R18L-16	TCC22R20L-16
Cooling Duty - EC Fans	(1)	kW	800	850	900
Nom Input -Cooling Only		kW	242	263	280
EER	(2)		3.30	3.24	3.21
ESEER	(3)		4.71	4.79	4.86
Nominal Output - Free Cooling	(4)	kW	N/A	N/A	N/A
Ambient when Free Cooling = 100% Nominal DX	(5)	°C	N/A	N/A	N/A
Capacity Steps	(6)	%	15-100%	15-100%	15-100%
Dimensions (H x W x L)	(9)	mm	2800 x 2200 x 9418	2800 x 2200 x 10550	2800 x 2200 x 11682
Machine Weight	(7)	kg	7790	8220	9010
Operating Weight	(7)	kg	8010	8440	9230
Construction Material			Base: Plain Galvanised Steel, Panels: Galvanised Sheet Steel, Epoxy Baked Powder Paint, Light Grey (RAL 7035)		
Evaporator - Type			Flooded - Shell and Tube Evaporator		
Insulation			Class O, UV stable Insulation		
Total Max. Water Flow		l/s	63	63	63
Total Min. Water Flow		l/s	20.9	20.9	20.9
Condenser - Type			Epoxy Coated Aluminium Microchannel & Aluminium Fins		
Face Area Total		m²	37.9	42.6	47.4
Maximum Airflow - EC Fans		m³/s	101.2	113.9	126.5
Condenser Fan & Motor			Sickle Bladed Axial Fan		
Quantity			16	18	20
Diameter		mm	800	800	800
Maximum Speed - EC Fans		rpm	1025	1025	1025
Compressor - Type			Turbocor - Oil Free Compressor		
Quantity			2	2	2
Capacity Control			Variable Frequency Drive (VFD) for Linear Capacity Modulation		
Refrigeration			Dual Circuit	Dual Circuit	Dual Circuit
Refrigerant Pre-charged/ GWP			R134a / 1430		
Charge (Total) CCT1 + CCT2		kg	235 + 230	240 + 235	250 + 245
GWP Tonnes Equivalent CO_2			336.05 + 328.9	343.2 + 336.05	357.5 + 350.35
Refrigeration Control			Electronic Expansion Valve (EEV)		
Water System			Grooved Type Coupling and Pipe Assembly		
Water Inlet / Outlet			DN150	DN150	DN150
Water Drain / Bleed - Evap		inch	1/2	1/2	1/2
Water Volume		l	227	227	227
Minimum System Water Volume	(8)	l	2796	2796	2796
Max System Operating Pressure		Barg	10	10	10
Flow Rate		l/s	31.7	33.7	35.7
Pressure Drop		kPa	30.3	33.8	37.3

(1) Based on AC units performance at 13/7°C return/supply temperatures, 35°C ambient, 100% water. All performance data is supplied in accordance with BS EN 14511-1:2013
(2) EER = DX cooling output / (compressor input power + fan input power)
(3) ESEER based upon unit operating at 12 / 7 °C return / supply temperature, 35°C ambient.
(4) Nominal Free Cooling output at 16/10°C return/supply temperatures, 2°C ambient, 20% ethylene glycol.
(5) Ambient temperature that maximum nominal DX duty can be achieved using Free Cooling only.
(6) This is a nominal figure based on full compressor duty, actual turndown depends on both condensing and evaporating temperatures.
(7) Based on standard unit without options, machine weight includes refrigerant charge, operating weight includes refrigerant charge and water volume. For unit weights with waterside options fitted please contact Airedale.
(8) For minimum system water volume calculation, refer to Design Features & Information - Minimum System Water Volume Calculations.
(9) Height based on standard fan, for optional fan dimensions please contact Airedale

Technical Data

TCC22R16L-16, TCC22R18L-16, TCC22R20L-16

Electrical

			24	25	26
ELECTRICAL DATA			TCC22R16L-16	TCC22R18L-16	TCC22R20L-16
Unit Data					
Full Load Amps	(1)	A	482	490	498
Maximum Start Amps		A	272	280	288
Mains Supply		VAC	400V (±10%) 3PH 50Hz		
Recommended Mains Fuse Size		A	500	560	560
Max Mains Incoming Cable Size (Direct to 3 Phase Mains Isolator)		mm²	2x 300mm² (Torque >20Nm)		
Independent Permanent Supply Recommended Fuse Size		A	25	25	25
Independent Permanent Supply		VAC	230V 1PH 50Hz (±10%)		
Max Permanent Incoming Cable Size (Direct to Control Panel Isolator)		mm²	6mm² / 8 AWG		
Control Circuit		VAC	24 VAC & 230VAC (±10%)		
Evaporator					
Immersion Heater Rating		W	340 (2x 170)	340 (2x 170)	340 (2x 170)
External Trace Heating					
Available (fitted by others)		W	500	500	500
Condenser Fan - Per Fan (EC)					
Quantity			16	18	20
Full Load Amps		A	3.9	3.9	3.9
Locked Rotor Amps		A	N/A	N/A	N/A
Motor Rating		kW	2.56	2.56	2.56
Compressor - Per Compressor					
Nominal Run Amps		A	210	210	210
Quantity			2	2	2
Motor Rating		kW	129	129	129
Start Amps		A	2	2	2
Type Of Start			Electronic Soft Start		

(1) Based at full load Conditions and EC Fans
Pump electrical data is avaliable from Airedale upon request.

Technical Data

TCC23R12S-17, TCC23R14S-17, TCC23R16S-17, TCC23R18S-17

Mechanical

			27	28	29	30
Mechanical Data	Notes	Units	TCC23R12S-17	TCC23R14S-17	TCC23R16S-17	TCC23R18S-17
Cooling Duty - EC Fans	(1)	kW	630	680	730	780
Nom Input -Cooling Only		kW	188	198	208	221
EER	(2)		3.35	3.44	3.51	3.53
ESEER	(3)		5.16	5.27	5.30	5.36
Nominal Output - Free Cooling	(4)	kW	N/A	N/A	N/A	N/A
Ambient when Free Cooling = 100% Nominal DX	(5)	°C	N/A	N/A	N/A	N/A
Capacity Steps	(6)	%	10-100%	10-100%	10-100%	10-100%
Dimensions (H x W x L)	(9)	mm	2800 x 2200 x 7154	2800 x 2200 x 8286	2800 x 2200 x 9418	2800 x 2200 x 10550
Machine Weight	(7)	kg	6880	7440	7850	8530
Operating Weight	(7)	kg	7110	7670	8080	8760
Construction Material			Base: Plain Galvanised Steel, Panels: Galvanised Sheet Steel, Epoxy Baked Powder Paint, Light Grey (RAL 7035)			
Evaporator - Type			Flooded - Shell and Tube Evaporator			
Insulation			Class O, UV stable Insulation			
Total Max. Water Flow		l/s	67	67	67	67
Total Min. Water Flow		l/s	22.3	22.3	22.3	22.3
Condenser - Type			Epoxy Coated Aluminium Microchannel & Aluminium Fins			
Face Area Total		m²	28.4	33.2	37.9	42.6
Maximum Airflow - EC Fans		m³/s	75.9	88.6	101.2	113.9
Condenser Fan & Motor			Sickle Bladed Axial Fan			
Quantity			12	14	16	18
Diameter		mm	800	800	800	800
Maximum Speed - EC Fans		rpm	1025	1025	1025	1025
Compressor - Type			Turbocor - Oil Free Compressor			
Quantity			3	3	3	3
Capacity Control			Variable Frequency Drive (VFD) for Linear Capacity Modulation			
Refrigeration			Dual Circuit	Dual Circuit	Dual Circuit	Dual Circuit
Refrigerant Pre-charged/ GWP			R134a / 1430			
Charge (Total) CCT1 + CCT2		kg	330 + 170	340 + 175	355 + 180	355 + 185
GWP Tonnes Equivalent CO_2			471.9 + 243.1	486.2 + 250.25	507.65 + 257.4	507.65 + 264.55
Refrigeration Control			Electronic Expansion Valve (EEV)			
Water System			Grooved Type Coupling and Pipe Assembly			
Water Inlet / Outlet			DN150	DN150	DN150	DN150
Water Drain / Bleed - Evap		inch	1/2	1/2	1/2	1/2
Water Volume		l	235	235	235	235
Minimum System Water Volume	(8)	l	1948	1948	1948	1948
Max System Operating Pressure		Barg	10	10	10	10
Flow Rate		l/s	25.0	27.0	29.0	30.9
Pressure Drop		kPa	17.8	20.4	23.2	26.1

(1) Based on AC units performance at 13/7°C return/supply temperatures, 35°C ambient, 100% water. All performance data is supplied in accordance with BS EN 14511-1:2013
(2) EER = DX cooling output / (compressor input power + fan input power)
(3) ESEER based upon unit operating at 12 / 7 °C return / supply temperature, 35°C ambient.
(4) Nominal Free Cooling output at 16/10°C return/supply temperatures, 2°C ambient, 20% ethylene glycol.
(5) Ambient temperature that maximum nominal DX duty can be achieved using Free Cooling only.
(6) This is a nominal figure based on full compressor duty, actual turndown depends on both condensing and evaporating temperatures.
(7) Based on standard unit without options, machine weight includes refrigerant charge, operating weight includes refrigerant charge and water volume. For unit weights with waterside options fitted please contact Airedale.
(8) For minimum system water volume calculation, refer to Design Features & Information - Minimum System Water Volume Calculations.
(9) Height based on standard fan, for optional fan dimensions please contact Airedale

Technical Data

TCC23R12S-17, TCC23R14S-17, TCC23R16S-17, TCC23R18S-17

Electrical

			27	28	29	30
ELECTRICAL DATA			TCC23R12S-17	TCC23R14S-17	TCC23R16S-17	TCC23R18S-17
Unit Data						
Full Load Amps	(1)	A	482	490	497	475
Maximum Start Amps		A	337	345	352	340
Mains Supply		VAC	400V (±10%) 3PH 50Hz			
Recommended Mains Fuse Size		A	500	500	560	560
Max Mains Incoming Cable Size (Direct to 3 Phase Mains Isolator)		mm²	2x 300mm² (Torque >20Nm)			
Independent Permanent Supply Recommended Fuse Size		A	25	25	25	25
Independent Permanent Supply		VAC	230V 1PH 50Hz (±10%)			
Max Permanent Incoming Cable Size (Direct to Control Panel Isolator)		mm²	6mm² / 8 AWG			
Control Circuit		VAC	24 VAC & 230VAC (±10%)			
Evaporator						
Immersion Heater Rating		W	340 (2x 170)	340 (2x 170)	340 (2x 170)	340 (2x 170)
External Trace Heating						
Available (fitted by others)		W	500	500	500	500
Condenser Fan - Per Fan (EC)						
Quantity			12	14	16	18
Full Load Amps		A	3.9	3.9	3.9	3.9
Locked Rotor Amps		A	N/A	N/A	N/A	N/A
Motor Rating		kW	2.56	2.56	2.56	2.56
Compressor - Per Compressor						
Nominal Run Amps		A	145	145	145	145
Quantity			3	3	3	3
Motor Rating		kW	87	87	87	87
Start Amps		A	2	2	2	2
Type Of Start			Electronic Soft Start			

(1) Based at full load Conditions and EC Fans
Pump electrical data is avaliable from Airedale upon request.

Technical Data

TCC23R16L-19, TCC23R18L-19

Mechanical

			31	32
Mechanical Data	Notes	Units	TCC23R16L-19	TCC23R18L-19
Cooling Duty - EC Fans	(1)	kW	840	900
Nom Input -Cooling Only		kW	271	282
EER	(2)		3.10	3.19
ESEER	(3)		4.88	5.00
Nominal Output - Free Cooling	(4)	kW	N/A	N/A
Ambient when Free Cooling = 100% Nominal DX	(5)	°C	N/A	N/A
Capacity Steps	(6)	%	10-100%	10-100%
Dimensions (H x W x L)	(9)	mm	2800 x 2200 x 9418	2800 x 2200 x 10550
Machine Weight	(7)	kg	8600	9270
Operating Weight	(7)	kg	8880	9550
Construction Material			Base: Plain Galvanised Steel, Panels: Galvanised Sheet Steel, Epoxy Baked Powder Paint, Light Grey (RAL 7035)	
Evaporator - Type			Flooded - Shell and Tube Evaporator	
Insulation			Class O, UV stable Insulation	
Total Max. Water Flow		l/s	86	86
Total Min. Water Flow		l/s	28.8	28.8
Condenser - Type			Epoxy Coated Aluminium Microchannel & Aluminium Fins	
Face Area Total		m²	37.9	42.6
Maximum Airflow - EC Fans		m³/s	101.2	113.9
Condenser Fan & Motor			Sickle Bladed Axial Fan	
Quantity			16	18
Diameter		mm	800	800
Maximum Speed - EC Fans		rpm	1025	1025
Compressor - Type			Turbocor - Oil Free Compressor	
Quantity			3	3
Capacity Control			Variable Frequency Drive (VFD) for Linear Capacity Modulation	
Refrigeration			Dual Circuit	Dual Circuit
Refrigerant Pre-charged/ GWP			R134a / 1430	
Charge (Total) CCT1 + CCT2		kg	460 + 225	465 + 235
GWP Tonnes Equivalent CO_2			657.8 + 321.75	664.95 + 336.05
Refrigeration Control			Electronic Expansion Valve (EEV)	
Water System			Grooved Type Coupling and Pipe Assembly	
Water Inlet / Outlet			DN200	DN200
Water Drain / Bleed - Evap		inch	1/2	1/2
Water Volume		l	282	282
Minimum System Water Volume	(8)	l	2851	2851
Max System Operating Pressure		Barg	10	10
Flow Rate		l/s	33.3	35.7
Pressure Drop		kPa	18.6	21.0

(1) Based on AC units performance at 13/7°C return/supply temperatures, 35°C ambient, 100% water. All performance data is supplied in accordance with BS EN 14511-1:2013
(2) EER = DX cooling output / (compressor input power + fan input power)
(3) ESEER based upon unit operating at 12 / 7 °C return / supply temperature, 35°C ambient.
(4) Nominal Free Cooling output at 16/10°C return/supply temperatures, 2°C ambient, 20% ethylene glycol.
(5) Ambient temperature that maximum nominal DX duty can be achieved using Free Cooling only.
(6) This is a nominal figure based on full compressor duty, actual turndown depends on both condensing and evaporating temperatures.
(7) Based on standard unit without options, machine weight includes refrigerant charge, operating weight includes refrigerant charge and water volume.
For unit weights with waterside options fitted please contact Airedale.
(8) For minimum system water volume calculation, refer to Design Features & Information - Minimum System Water Volume Calculations.
(9) Height based on standard fan, for optional fan dimensions please contact Airedale

Technical Data

TCC23R16L-19, TCC23R18L-19

Electrical

			31	32
ELECTRICAL DATA			TCC23R16L-19	TCC23R18L-19
Unit Data				
Full Load Amps	(1)	A	692	700
Maximum Start Amps		A	482	490
Mains Supply		VAC	400V (±10%) 3PH 50Hz 400V (±10%) 3PH 50Hz	
Recommended Mains Fuse Size		A	710	750
Max Mains Incoming Cable Size (Direct to 3 Phase Mains Isolator)		mm²	2x 300mm² (Torque >20Nm) 2x 300mm² (Torque >20Nm)	
Independent Permanent Supply Recommended Fuse Size		A	25	25
Independent Permanent Supply		VAC	230V 1PH 50Hz (±10%) 230V 1PH 50Hz (±10%)	
Max Permanent Incoming Cable Size (Direct to Control Panel Isolator)		mm²	6mm² / 8 AWG 6mm² / 8 AWG	
Control Circuit		VAC	24 VAC & 230VAC (±10%) 24 VAC & 230VAC (±10%)	
Evaporator				
Immersion Heater Rating		W	500 (2x 250)	500 (2x 250)
External Trace Heating				
Available (fitted by others)		W	500	500
Condenser Fan - Per Fan (EC)				
Quantity			16	18
Full Load Amps		A	3.9	3.9
Locked Rotor Amps		A	N/A	N/A
Motor Rating		kW	2.56	2.56
Compressor - Per Compressor				
Nominal Run Amps		A	210	210
Quantity			3	3
Motor Rating		kW	129	129
Start Amps		A	2	2
Type Of Start			Electronic Soft Start	

(1) Based at full load Conditions and EC Fans
Pump electrical data is avaliable from Airedale upon request.

Technical Data

TCC23R20L-20, TCC23R22L-20, TCC23R24L-20

Mechanical

			33	34	35
Mechanical Data	Notes	Units	TCC23R20L-20	TCC23R22L-20	TCC23R24L-20
Cooling Duty - EC Fans	(1)	kW	960	1020	1080
Nom Input -Cooling Only		kW	295	311	328
EER	(2)		3.26	3.28	3.29
ESEER	(3)		5.09	5.12	5.16
Nominal Output - Free Cooling	(4)	kW	N/A	N/A	N/A
Ambient when Free Cooling = 100% Nominal DX	(5)	°C	N/A	N/A	N/A
Capacity Steps	(6)	%	10-100%	10-100%	10-100%
Dimensions (H x W x L)	(9)	mm	2800 x 2200 x 11682	2800 x 2200 x 12814	2800 x 2200 x 13946
Machine Weight	(7)	kg	10190	10800	11440
Operating Weight	(7)	kg	10480	11090	11730
Construction Material			Base: Plain Galvanised Steel, Panels: Galvanised Sheet Steel, Epoxy Baked Powder Paint, Light Grey (RAL 7035)		
Evaporator - Type			Flooded - Shell and Tube Evaporator		
Insulation			Class O, UV stable Insulation		
Total Max. Water Flow		l/s	91	91	91
Total Min. Water Flow		l/s	30.4	30.4	30.4
Condenser - Type			Epoxy Coated Aluminium Microchannel & Aluminium Fins		
Face Area Total		m²	47.4	52.1	56.8
Maximum Airflow - EC Fans		m³/s	126.5	139.2	151.9
Condenser Fan & Motor			Sickle Bladed Axial Fan		
Quantity			20	22	24
Diameter		mm	800	800	800
Maximum Speed - EC Fans		rpm	1025	1025	1025
Compressor - Type			Turbocor - Oil Free Compressor		
Quantity			3	3	3
Capacity Control			Variable Frequency Drive (VFD) for Linear Capacity Modulation		
Refrigeration			Dual Circuit	Dual Circuit	Dual Circuit
Refrigerant Pre-charged/ GWP			R134a / 1430		
Charge (Total) CCT1 + CCT2		kg	465 + 235	475 + 235	480 + 250
GWP Tonnes Equivalent CO_2			664.95 + 336.05	679.25 + 336.05	686.4 + 357.5
Refrigeration Control			Electronic Expansion Valve (EEV)		
Water System			Grooved Type Coupling and Pipe Assembly		
Water Inlet / Outlet			DN200	DN200	DN200
Water Drain / Bleed - Evap		inch	1/2	1/2	1/2
Water Volume		l	292	292	292
Minimum System Water Volume	(8)	l	2861	2861	2861
Max System Operating Pressure		Barg	10	10	10
Flow Rate		l/s	38.1	40.5	42.8
Pressure Drop		kPa	21.6	24.1	26.7

(1) Based on AC units performance at 13/7°C return/supply temperatures, 35°C ambient, 100% water. All performance data is supplied in accordance with BS EN 14511-1:2013
(2) EER = DX cooling output / (compressor input power + fan input power)
(3) ESEER based upon unit operating at 12 / 7 °C return / supply temperature, 35°C ambient.
(4) Nominal Free Cooling output at 16/10°C return/supply temperatures, 2°C ambient, 20% ethylene glycol.
(5) Ambient temperature that maximum nominal DX duty can be achieved using Free Cooling only.
(6) This is a nominal figure based on full compressor duty, actual turndown depends on both condensing and evaporating temperatures.
(7) Based on standard unit without options, machine weight includes refrigerant charge, operating weight includes refrigerant charge and water volume.
For unit weights with waterside options fitted please contact Airedale.
(8) For minimum system water volume calculation, refer to Design Features & Information - Minimum System Water Volume Calculations.
(9) Height based on standard fan, for optional fan dimensions please contact Airedale

Technical Data

TCC23R20L-20, TCC23R22L-20, TCC23R24L-20

Electrical

			33	34	35
ELECTRICAL DATA			TCC23R20L-20	TCC23R22L-20	TCC23R24L-20
Unit Data					
Full Load Amps	**(1)**	A	708	716	724
Maximum Start Amps		A	498	506	514
Mains Supply		VAC	400V (±10%) 3PH 50Hz		
Recommended Mains Fuse Size		A	750	750	750
Max Mains Incoming Cable Size (Direct to 3 Phase Mains Isolator)		mm²	2x 300mm² (Torque >20Nm)		
Independent Permanent Supply Recommended Fuse Size		A	25	25	25
Independent Permanent Supply		VAC	230V 1PH 50Hz (±10%)		
Max Permanent Incoming Cable Size (Direct to Control Panel Isolator)		mm²	6mm² / 8 AWG		
Control Circuit		VAC	24 VAC & 230VAC (±10%)		
Evaporator					
Immersion Heater Rating		W	500 (2x 250)	500 (2x 250)	500 (2x 250)
External Trace Heating					
Available (fitted by others)		W	500	500	500
Condenser Fan - Per Fan (EC)					
Quantity			20	22	24
Full Load Amps		A	3.9	3.9	3.9
Locked Rotor Amps		A	N/A	N/A	N/A
Motor Rating		kW	2.56	2.56	2.56
Compressor - Per Compressor					
Nominal Run Amps		A	210	210	210
Quantity			3	3	3
Motor Rating		kW	129	129	129
Start Amps		A	2	2	2
Type Of Start			Electronic Soft Start		

(1) Based at full load Conditions and AC Standard Fans
Pump electrical data is avaliable from Airedale upon request.

Technical Data

TCC24R16S-18, TCC24R18S-18

Mechanical

			36	37
Mechanical Data	Notes	Units	TCC24R16S-18	TCC24R18S-18
Cooling Duty - EC Fans	(1)	kW	820	860
Nom Input -Cooling Only		kW	247	253
EER	(2)		3.32	3.40
ESEER	(3)		5.21	5.26
Nominal Output - Free Cooling	(4)	kW	N/A	N/A
Ambient when Free Cooling = 100% Nominal DX	(5)	°C	N/A	N/A
Capacity Steps	(6)	%	7.5-100%	7.5-100%
Dimensions (H x W x L)	(9)	mm	2800 x 2200 x 9418	2800 x 2200 x 10550
Machine Weight	(7)	kg	8580	8910
Operating Weight	(7)	kg	8830	9160
Construction Material			Base: Plain Galvanised Steel, Panels: Galvanised Sheet Steel, Epoxy Baked Powder Paint, Light Grey (RAL 7035)	
Evaporator - Type			Flooded - Shell and Tube Evaporator	
Insulation			Class O, UV stable Insulation	
Total Max. Water Flow		l/s	78	78
Total Min. Water Flow		l/s	25.8	25.8
Condenser - Type			Epoxy Coated Aluminium Microchannel & Aluminium Fins	
Face Area Total		m²	37.9	42.6
Maximum Airflow - EC Fans		m³/s	101.2	113.9
Condenser Fan & Motor			Sickle Bladed Axial Fan	
Quantity			16	18
Diameter		mm	800	800
Maximum Speed - EC Fans		rpm	1025	1025
Compressor - Type			Turbocor - Oil Free Compressor	
Quantity			4	4
Capacity Control			Variable Frequency Drive (VFD) for Linear Capacity Modulation	
Refrigeration			Dual Circuit	Dual Circuit
Refrigerant Pre-charged/ GWP			R134a / 1430	
Charge (Total) CCT1 + CCT2		kg	250 + 250	260 + 250
GWP Tonnes Equivalent CO_2			357.5 + 357.5	371.8 + 357.5
Refrigeration Control			Electronic Expansion Valve (EEV)	
Water System			Grooved Type Coupling and Pipe Assembly	
Water Inlet / Outlet			DN200	DN200
Water Drain / Bleed - Evap		inch	1/2	1/2
Water Volume		l	260	260
Minimum System Water Volume	(8)	l	1972	1972
Max System Operating Pressure		Barg	10	10
Flow Rate		l/s	32.5	34.1
Pressure Drop		kPa	21.5	23.4

(1) Based on AC units performance at 13/7°C return/supply temperatures, 35°C ambient, 100% water. All performance data is supplied in accordance with BS EN 14511-1:2013
(2) EER = DX cooling output / (compressor input power + fan input power)
(3) ESEER based upon unit operating at 12 / 7 °C return / supply temperature, 35°C ambient.
(4) Nominal Free Cooling output at 16/10°C return/supply temperatures, 2°C ambient, 20% ethylene glycol.
(5) Ambient temperature that maximum nominal DX duty can be achieved using Free Cooling only.
(6) This is a nominal figure based on full compressor duty, actual turndown depends on both condensing and evaporating temperatures.
(7) Based on standard unit without options, machine weight includes refrigerant charge, operating weight includes refrigerant charge and water volume.
For unit weights with waterside options fitted please contact Airedale.
(8) For minimum system water volume calculation, refer to Design Features & Information - Minimum System Water Volume Calculations.
(9) Height based on standard fan, for optional fan dimensions please contact Airedale

Technical Data

TCC24R16S-18, TCC24R18S-18

Electrical

			36	37
ELECTRICAL DATA			TCC24R16S-18	TCC24R18S-18
Unit Data				
Full Load Amps	(1)	A	642	650
Maximum Start Amps		A	497	505
Mains Supply		VAC	400V (±10%) 3PH 50Hz	
Recommended Mains Fuse Size		A	670	670
Max Mains Incoming Cable Size (Direct to 3 Phase Mains Isolator)		mm²	2x 300mm² (Torque >20Nm)	
Independent Permanent Supply Recommended Fuse Size		A	25	25
Independent Permanent Supply		VAC	230V 1PH 50Hz (±10%)	
Max Permanent Incoming Cable Size (Direct to Control Panel Isolator)		mm²	6mm² / 8 AWG	
Control Circuit		VAC	24 VAC & 230VAC (±10%)	
Evaporator				
Immersion Heater Rating		W	340 (2x 170)	340 (2x 170)
External Trace Heating				
Available (fitted by others)		W	500	500
Condenser Fan - Per Fan (EC)				
Quantity			16	18
Full Load Amps		A	3.9	3.9
Locked Rotor Amps		A	N/A	N/A
Motor Rating		kW	2.56	2.56
Compressor - Per Compressor				
Nominal Run Amps		A	145	145
Quantity			4	4
Motor Rating		kW	87	87
Start Amps		A	2	2
Type Of Start			Electronic Soft Start	

(1) Based at full load Conditions and AC Standard Fans
Pump electrical data is avaliable from Airedale upon request.

Technical Data

TCC24R20S-18, TCC24R22S-18, TCC24R24S-18

Mechanical

			38	39	40
Mechanical Data	Notes	Units	TCC24R20S-18	TCC24R22S-18	TCC24R24S-18
Cooling Duty - EC Fans	(1)	kW	900	950	1000
Nom Input -Cooling Only		kW	260	272	284
EER	(2)		3.46	3.49	3.52
ESEER	(3)		5.31	5.33	5.46
Nominal Output - Free Cooling	(4)	kW	N/A	N/A	N/A
Ambient when Free Cooling = 100% Nominal DX	(5)	°C	N/A	N/A	N/A
Capacity Steps	(6)	%	7.5-100%	7.5-100%	7.5-100%
Dimensions (H x W x L)	(9)	mm	2800 x 2200 x 11682	2800 x 2200 x 12814	2800 x 2200 x 13946
Machine Weight	(7)	kg	9860	10480	11110
Operating Weight	(7)	kg	10110	10730	11360
Construction Material			Base: Plain Galvanised Steel, Panels: Galvanised Sheet Steel, Epoxy Baked Powder Paint, Light Grey (RAL 7035)		
Evaporator - Type			Flooded - Shell and Tube Evaporator		
Insulation			Class O, UV stable Insulation		
Total Max. Water Flow		l/s	78	78	78
Total Min. Water Flow		l/s	25.8	25.8	25.8
Condenser - Type			Epoxy Coated Aluminium Microchannel & Aluminium Fins		
Face Area Total		m²	47.4	52.1	56.8
Maximum Airflow - EC Fans		m³/s	126.5	139.2	151.9
Condenser Fan & Motor			Sickle Bladed Axial Fan		
Quantity			20	22	24
Diameter		mm	800	800	800
Maximum Speed - EC Fans		rpm	1025	1025	1025
Compressor - Type			Turbocor - Oil Free Compressor		
Quantity			4	4	4
Capacity Control			Variable Frequency Drive (VFD) for Linear Capacity Modulation		
Refrigeration			Dual Circuit	Dual Circuit	Dual Circuit
Refrigerant Pre-charged/ GWP			R134a / 1430		
Charge (Total) CCT1 + CCT2		kg	270 + 265	270 + 275	285 + 280
GWP Tonnes Equivalent CO_2			386.1 + 378.95	386.1 + 393.25	407.55 + 400.4
Refrigeration Control			Electronic Expansion Valve (EEV)		
Water System			Grooved Type Coupling and Pipe Assembly		
Water Inlet / Outlet			DN200	DN200	DN200
Water Drain / Bleed - Evap		inch	1/2	1/2	1/2
Water Volume		l	260	260	260
Minimum System Water Volume	(8)	l	1972	1972	1972
Max System Operating Pressure		Barg	10	10	10
Flow Rate		l/s	35.7	37.7	39.7
Pressure Drop		kPa	25.3	27.9	30.5

(1) Based on AC units performance at 13/7°C return/supply temperatures, 35°C ambient, 100% water. All performance data is supplied in accordance with BS EN 14511-1:2013
(2) EER = DX cooling output / (compressor input power + fan input power)
(3) ESEER based upon unit operating at 12 / 7 °C return / supply temperature, 35°C ambient.
(4) Nominal Free Cooling output at 16/10°C return/supply temperatures, 2°C ambient, 20% ethylene glycol.
(5) Ambient temperature that maximum nominal DX duty can be achieved using Free Cooling only.
(6) This is a nominal figure based on full compressor duty, actual turndown depends on both condensing and evaporating temperatures.
(7) Based on standard unit without options, machine weight includes refrigerant charge, operating weight includes refrigerant charge and water volume.
For unit weights with waterside options fitted please contact Airedale.
(8) For minimum system water volume calculation, refer to Design Features & Information - Minimum System Water Volume Calculations.
(9) Height based on standard fan, for optional fan dimensions please contact Airedale

Technical Data

TCC24R20S-18, TCC24R22S-18, TCC24R24S-18

Electrical

			38	39	40
ELECTRICAL DATA			TCC24R20S-18	TCC24R22S-18	TCC24R24S-18
Unit Data					
Full Load Amps	(1)	A	658	666	674
Maximum Start Amps		A	513	521	529
Mains Supply		VAC	400V (±10%) 3PH 50Hz		
Recommended Mains Fuse Size		A	670	710	710
Max Mains Incoming Cable Size (Direct to 3 Phase Mains Isolator)		mm²	2x 300mm² (Torque >20Nm)		
Independent Permanent Supply Recommended Fuse Size		A	25	25	25
Independent Permanent Supply		VAC	230V 1PH 50Hz (±10%)		
Max Permanent Incoming Cable Size (Direct to Control Panel Isolator)		mm²	6mm² / 8 AWG		
Control Circuit		VAC	24 VAC & 230VAC (±10%)		
Evaporator					
Immersion Heater Rating		W	340 (2x 170)	340 (2x 170)	340 (2x 170)
External Trace Heating					
Available (fitted by others)		W	500	500	500
Condenser Fan - Per Fan (EC)					
Quantity			20	22	24
Full Load Amps		A	3.9	3.9	3.9
Locked Rotor Amps		A	N/A	N/A	N/A
Motor Rating		kW	2.56	2.56	2.56
Compressor - Per Compressor					
Nominal Run Amps		A	145	145	145
Quantity			4	4	4
Motor Rating		kW	87	87	87
Start Amps		A	2	2	2
Type Of Start			Electronic Soft Start		

(1) Based at full load Conditions and AC Standard Fans
Pump electrical data is avaliable from Airedale upon request.

Technical Data

TCC24R20L-21, TCC24R22L-21, TCC24R24L-21

Mechanical

			41	42	43
Mechanical Data	Notes	Units	TCC24R20L-21	TCC24R22L-21	TCC24R24L-21
Cooling Duty - EC Fans	(1)	kW	1040	1100	1160
Nom Input -Cooling Only		kW	345	358	369
EER	(2)		3.02	3.08	3.14
ESEER	(3)		5.07	5.11	5.14
Nominal Output - Free Cooling	(4)	kW	N/A	N/A	N/A
Ambient when Free Cooling = 100% Nominal DX	(5)	°C	N/A	N/A	N/A
Capacity Steps	(6)	%	7.5-100%	7.5-100%	7.5-100%
Dimensions (H x W x L)	(9)	mm	2800 x 2200 x 11682	2800 x 2200 x 12814	2800 x 2200 x 13946
Machine Weight	(7)	kg	10720	11360	11990
Operating Weight	(7)	kg	11040	11680	12310
Construction Material			Base: Plain Galvanised Steel, Panels: Galvanised Sheet Steel, Epoxy Baked Powder Paint, Light Grey (RAL 7035)		
Evaporator - Type			Flooded - Shell and Tube Evaporator		
Insulation			Class O, UV stable Insulation		
Total Max. Water Flow		l/s	108	108	108
Total Min. Water Flow		l/s	36.2	36.2	36.2
Condenser - Type			Epoxy Coated Aluminium Microchannel & Aluminium Fins		
Face Area Total		m²	47.4	52.1	56.8
Maximum Airflow - EC Fans		m³/s	126.5	139.2	151.9
Condenser Fan & Motor			Sickle Bladed Axial Fan		
Quantity			20	22	24
Diameter		mm	800	800	800
Maximum Speed - EC Fans		rpm	1025	1025	1025
Compressor - Type			Turbocor - Oil Free Compressor		
Quantity			4	4	4
Capacity Control			Variable Frequency Drive (VFD) for Linear Capacity Modulation		
Refrigeration			Dual Circuit	Dual Circuit	Dual Circuit
Refrigerant Pre-charged/ GWP			R134a / 1430		
Charge (Total) CCT1 + CCT2		kg	360 + 360	365 + 370	380 + 380
GWP Tonnes Equivalent CO_2			514.8 + 514.8	521.95 + 529.1	543.4 + 543.4
Refrigeration Control			Electronic Expansion Valve (EEV)		
Water System			Grooved Type Coupling and Pipe Assembly		
Water Inlet / Outlet			DN200	DN200	DN200
Water Drain / Bleed - Evap		inch	1/2	1/2	1/2
Water Volume		l	330	330	330
Minimum System Water Volume	(8)	l	2898	2898	2898
Max System Operating Pressure		Barg	10	10	10
Flow Rate		l/s	41.3	43.6	46.0
Pressure Drop		kPa	17.9	19.7	21.6

(1) Based on AC units performance at 13/7°C return/supply temperatures, 35°C ambient, 100% water. All performance data is supplied in accordance with BS EN 14511-1:2013
(2) EER = DX cooling output / (compressor input power + fan input power)
(3) ESEER based upon unit operating at 12 / 7 °C return / supply temperature, 35°C ambient.
(4) Nominal Free Cooling output at 16/10°C return/supply temperatures, 2°C ambient, 20% ethylene glycol.
(5) Ambient temperature that maximum nominal DX duty can be achieved using Free Cooling only.
(6) This is a nominal figure based on full compressor duty, actual turndown depends on both condensing and evaporating temperatures.
(7) Based on standard unit without options, machine weight includes refrigerant charge, operating weight includes refrigerant charge and water volume.
For unit weights with waterside options fitted please contact Airedale.
(8) For minimum system water volume calculation, refer to Design Features & Information - Minimum System Water Volume Calculations.
(9) Height based on standard fan, for optional fan dimensions please contact Airedale

Technical Data

TCC24R20L-21, TCC24R22L-21, TCC24R24L-21

Electrical

			41	42	43
ELECTRICAL DATA			TCC24R20L-21	TCC24R22L-21	TCC24R24L-21
Unit Data					
Full Load Amps	(1)	A	918	926	934
Maximum Start Amps		A	708	716	724
Mains Supply		VAC	400V (±10%) 3PH 50Hz		
Recommended Mains Fuse Size		A	1000	1000	1000
Max Mains Incoming Cable Size (Direct to 3 Phase Mains Isolator)		mm²	2x 300mm² (Torque >20Nm)		
Independent Permanent Supply Recommended Fuse Size		A	25	25	25
Independent Permanent Supply		VAC	230V 1PH 50Hz (±10%)		
Max Permanent Incoming Cable Size (Direct to Control Panel Isolator)		mm²	6mm² / 8 AWG		
Control Circuit		VAC	24 VAC & 230VAC (±10%)		
Evaporator					
Immersion Heater Rating		W	500 (2x 250)		
External Trace Heating					
Available (fitted by others)		W	500	500	500
Condenser Fan - Per Fan (EC)					
Quantity			20	22	24
Full Load Amps		A	3.9	3.9	3.9
Locked Rotor Amps		A	N/A	N/A	N/A
Motor Rating		kW	2.56	2.56	2.56
Compressor - Per Compressor					
Nominal Run Amps		A	210	210	210
Quantity			4	4	4
Motor Rating		kW	129	129	129
Start Amps		A	2	2	2
Type Of Start			Electronic Soft Start		

(1) Based at full load Conditions and AC Fans
Pump electrical data is avaliable from Airedale upon request.

Technical Data - TCC (X) TCC11X04S-01, TCC11X06S-01, TCC11X08S-01

Mechanical

			44	45	46
Mechanical Data	Notes	Units	TCC11X04S-01	TCC11X06S-01	TCC11X08S-01
Cooling Duty - EC Fans	(1)	kW	200	225	235
Nom Input -Cooling Only		kW	58	58	57
EER	(2)		3.46	3.90	4.11
ESEER	(3)		4.36	5.38	5.63
Nominal Output - Free Cooling	(4)	kW	N/A	N/A	N/A
Ambient when Free Cooling = 100% Nominal DX	(5)	°C	N/A	N/A	N/A
Capacity Steps	(6)	%	30-100%	30-100%	30-100%
Dimensions (H x W x L)	(9)	mm	2800 x 2200 x 2626	2800 x 2200 x 3758	2800 x 2200 x 4890
Machine Weight	(7)	kg	2685	3240	3725
Operating Weight	(7)	kg	2800	3360	3850
Construction Material			Base: Plain Galvanised Steel, Panels: Galvanised Sheet Steel, Epoxy Baked Powder Paint, Light Grey (RAL 7035)		
Evaporator - Type			Flooded - Shell and Tube Evaporator		
Insulation			Class O, UV stable Insulation		
Total Max. Water Flow		l/s	22	22	22
Total Min. Water Flow		l/s	7.3	7.3	7.3
Condenser - Type			Epoxy Coated Aluminium Microchannel & Aluminium Fins		
Face Area Total		m²	9.5	14.2	18.9
Maximum Airflow - EC Fans		m³/s	17.7	26.5	35.3
Condenser Fan & Motor			Sickle Bladed Axial Fan		
Quantity			4	6	8
Diameter		mm	800	800	800
Maximum Speed - EC Fans		rpm	730	730	730
Compressor - Type			Turbocor - Oil Free Compressor		
Quantity			1	1	1
Capacity Control			Variable Frequency Drive (VFD) for Linear Capacity Modulation		
Refrigeration			Single Circuit	Single Circuit	Single Circuit
Refrigerant Pre-charged/ GWP			R134a / 1430		
Charge (Total) CCT1 + CCT2		kg	135	145	165
GWP Tonnes Equivalent CO_2			193	207	236
Refrigeration Control			Electronic Expansion Valve (EEV)		
Water System			Grooved Type Coupling and Pipe Assembly		
Water Inlet / Outlet			DN100	DN100	DN100
Water Drain / Bleed - Evap		inch	1/2	1/2	1/2
Water Volume		l	102	102	102
Minimum System Water Volume	(8)	l	1815	1815	1815
Max System Operating Pressure		Barg	10	10	10
Flow Rate		l/s	7.9	8.9	9.3
Pressure Drop		kPa	19.3	23.4	25.2

(1) Based on AC units performance at 13/7°C return/supply temperatures, 35°C ambient, 100% water. All performance data is supplied in accordance with BS EN 14511-1:2013
(2) EER = DX cooling output / (compressor input power + fan input power)
(3) ESEER based upon unit operating at 12 / 7 °C return / supply temperature, 35°C ambient.
(4) Nominal Free Cooling output at 16/10°C return/supply temperatures, 2°C ambient, 20% ethylene glycol.
(5) Ambient temperature that maximum nominal DX duty can be achieved using Free Cooling only.
(6) This is a nominal figure based on full compressor duty, actual turndown depends on both condensing and evaporating temperatures.
(7) Based on standard unit without options, machine weight includes refrigerant charge, operating weight includes refrigerant charge and water volume.
For unit weights with waterside options fitted please contact Airedale.
(8) For minimum system water volume calculation, refer to Design Features & Information - Minimum System Water Volume Calculations.
(9) Height based on standard fan, for optional fan dimensions please contact Airedale

Technical Data

TCC11X04S-01, TCC11X06S-01, TCC11X08S-01

Electrical

			44	45	46
ELECTRICAL DATA			TCC11X04S-01	TCC11X06S-01	TCC11X08S-01
Unit Data					
Full Load Amps	(1)	A	161	168	176
Maximum Start Amps		A	2	2	2
Mains Supply		VAC	400V (±10%) 3PH 50Hz		
Recommended Mains Fuse Size		A	200	200	200
Max Mains Incoming Cable Size (Direct to 3 Phase Mains Isolator)		mm²	2x 300mm² (Torque >20Nm)		
Independent Permanent Supply Recommended Fuse Size		A	25	25	25
Independent Permanent Supply		VAC	230V 1PH 50Hz (±10%)		
Max Permanent Incoming Cable Size (Direct to Control Panel Isolator)		mm²	6mm² / 8 AWG		
Control Circuit		VAC	24 VAC & 230VAC (±10%)		
Evaporator					
Immersion Heater Rating		W	500 (2x 250)	500 (2x 250)	500 (2x 250)
External Trace Heating					
Available (fitted by others)		W	500	500	500
Condenser Fan - Per Fan (EC)					
Quantity			4	6	8
Full Load Amps		A	3.9	3.9	3.9
Locked Rotor Amps		A	N/A	N/A	N/A
Motor Rating		kW	2.56	2.56	2.56
Compressor - Per Compressor					
Nominal Run Amps		A	145	145	145
Quantity			1	1	1
Motor Rating		kW	87	87	87
Start Amps		A	2	2	2
Type Of Start			Electronic Soft Start		

(1) Based at full load Conditions and AC Fans
Pump electrical data is avaliable from Airedale upon request.

Technical Data

TCC11X06L-02, TCC11X08L-03, TCC11X10L-03

Mechanical

			47	48	49
Mechanical Data	Notes	Units	TCC11X06L-02	TCC11X08L-03	TCC11X10L-03
Cooling Duty - EC Fans	(1)	kW	350	385	410
Nom Input -Cooling Only		kW	113	113	116
EER	(2)		3.09	3.40	3.55
ESEER	(3)		4.76	4.95	5.15
Nominal Output - Free Cooling	(4)	kW	N/A	N/A	N/A
Ambient when Free Cooling = 100% Nominal DX	(5)	°C	N/A	N/A	N/A
Capacity Steps	(6)	%	30-100%	30-100%	30-100%
Dimensions (H x W x L)	(9)	mm	2800 x 2200 x 3758	2800 x 2200 x 4890	2800 x 2200 x 6022
Machine Weight	(7)	kg	3415	4225	4805
Operating Weight	(7)	kg	3560	4355	4945
Construction Material			Base: Plain Galvanised Steel, Panels: Galvanised Sheet Steel, Epoxy Baked Powder Paint, Light Grey (RAL 7035)		
Evaporator - Type			Flooded - Shell and Tube Evaporator		
Insulation			Class O, UV stable Insulation		
Total Max. Water Flow		l/s	50	28	28
Total Min. Water Flow		l/s	16.7	9.2	9.2
Condenser - Type			Epoxy Coated Aluminium Microchannel & Aluminium Fins		
Face Area Total		m²	14.2	18.9	23.7
Maximum Airflow - EC Fans		m³/s	26.5	35.3	44.2
Condenser Fan & Motor			Sickle Bladed Axial Fan		
Quantity			6	8	10
Diameter		mm	800	800	800
Maximum Speed - EC Fans		rpm	730	730	730
Compressor - Type			Turbocor - Oil Free Compressor		
Quantity			1	1	1
Capacity Control			Variable Frequency Drive (VFD) for Linear Capacity Modulation		
Refrigeration			Single Circuit	Single Circuit	Single Circuit
Refrigerant Pre-charged/ GWP			R134a / 1430		
Charge (Total) CCT1 + CCT2		kg	170	320	340
GWP Tonnes Equivalent CO_2			243	458	486
Refrigeration Control			Electronic Expansion Valve (EEV)		
Water System			Grooved Type Coupling and Pipe Assembly		
Water Inlet / Outlet			DN100	DN100	DN100
Water Drain / Bleed - Evap		inch	1/2	1/2	1/2
Water Volume		l	126	114	114
Minimum System Water Volume	(8)	l	2695	2683	2683
Max System Operating Pressure		Barg	10	10	10
Flow Rate		l/s	13.9	15.3	16.3
Pressure Drop		kPa	7.0	34.9	38.9

(1) Based on AC units performance at 13/7°C return/supply temperatures, 35°C ambient, 100% water. All performance data is supplied in accordance with BS EN 14511-1:2013
(2) EER = DX cooling output / (compressor input power + fan input power)
(3) ESEER based upon unit operating at 12 / 7 °C return / supply temperature, 35°C ambient.
(4) Nominal Free Cooling output at 16/10°C return/supply temperatures, 2°C ambient, 20% ethylene glycol.
(5) Ambient temperature that maximum nominal DX duty can be achieved using Free Cooling only.
(6) This is a nominal figure based on full compressor duty, actual turndown depends on both condensing and evaporating temperatures.
(7) Based on standard unit without options, machine weight includes refrigerant charge, operating weight includes refrigerant charge and water volume.
For unit weights with waterside options fitted please contact Airedale.
(8) For minimum system water volume calculation, refer to Design Features & Information - Minimum System Water Volume Calculations.
(9) Height based on standard fan, for optional fan dimensions please contact Airedale

Technical Data

TCC11X06L-02, TCC11X08L-03, TCC11X10L-03

Electrical

			47	48	49
ELECTRICAL DATA			TCC11X06L-02	TCC11X08L-03	TCC11X10L-03
Unit Data					
Full Load Amps	(1)	A	233	241	249
Maximum Start Amps		A	2	2	2
Mains Supply		VAC	400V (±10%) 3PH 50Hz		
Recommended Mains Fuse Size		A	250	250	250
Max Mains Incoming Cable Size (Direct to 3 Phase Mains Isolator)		mm²	2x 300mm² (Torque >20Nm)		
Independent Permanent Supply Recommended Fuse Size		A	251	25	25
Independent Permanent Supply		VAC	230V 1PH 50Hz (±10%)		
Max Permanent Incoming Cable Size (Direct to Control Panel Isolator)		mm²	6mm² / 8 AWG		
Control Circuit		VAC	24 VAC & 230VAC (±10%)		
Evaporator					
Immersion Heater Rating		W	500 (2x 250)	500 (2x 250)	500 (2x 250)
External Trace Heating					
Available (fitted by others)		W	500	500	500
Condenser Fan - Per Fan (EC)					
Quantity			6	8	10
Full Load Amps		A	3.9	3.9	3.9
Locked Rotor Amps		A	N/A	N/A	N/A
Motor Rating		kW	2.56	2.56	2.56
Compressor - Per Compressor					
Nominal Run Amps		A	210	210	210
Quantity			1	1	1
Motor Rating		kW	129	129	129
Start Amps		A	2	2	2
Type Of Start			Electronic Soft Start		

(1) Based at full load Conditions and AC Fans
Pump electrical data is avaliable from Airedale upon request.

Technical Data

TCC12X08S-04, TCC12X10S-04, TCC12X12S-04

Mechanical

			50	51	52
Mechanical Data	Notes	Units	TCC12X08S-04	TCC12X10S-04	TCC12X12S-04
Cooling Duty - EC Fans	(1)	kW	430	460	490
Nom Input -Cooling Only		kW	128	128	131
EER	(2)		3.36	3.60	3.75
ESEER	(3)		4.98	5.13	5.48
Nominal Output - Free Cooling	(4)	kW	N/A	N/A	N/A
Ambient when Free Cooling = 100% Nominal DX	(5)	°C	N/A	N/A	N/A
Capacity Steps	(6)	%	15-100%	15-100%	15-100%
Dimensions (H x W x L)	(9)	mm	2800 x 2200 x 4890	2800 x 2200 x 6022	2800 x 2200 x 7154
Machine Weight	(7)	kg	4645	5190	5765
Operating Weight	(7)	kg	4810	5350	5925
Construction Material			Base: Plain Galvanised Steel, Panels: Galvanised Sheet Steel, Epoxy Baked Powder Paint, Light Grey (RAL 7035)		
Evaporator - Type			Flooded - Shell and Tube Evaporator		
Insulation			Class O, UV stable Insulation		
Total Max. Water Flow		l/s	41	41	41
Total Min. Water Flow		l/s	13.3	13.3	13.3
Condenser - Type			Epoxy Coated Aluminium Microchannel & Aluminium Fins		
Face Area Total		m²	18.9	23.7	28.4
Maximum Airflow - EC Fans		m³/s	35.3	44.2	53.0
Condenser Fan & Motor			Sickle Bladed Axial Fan		
Quantity			8	10	12
Diameter		mm	800	800	800
Maximum Speed - EC Fans		rpm	730	730	730
Compressor - Type			Turbocor - Oil Free Compressor		
Quantity			2	2	2
Capacity Control			Variable Frequency Drive (VFD) for Linear Capacity Modulation		
Refrigeration			Single Circuit	Single Circuit	Single Circuit
Refrigerant Pre-charged/ GWP			R134a / 1430		
Charge (Total) CCT1 + CCT2		kg	295	310	330
GWP Tonnes Equivalent CO_2			422	443	472
Refrigeration Control			Electronic Expansion Valve (EEV)		
Water System			Grooved Type Coupling and Pipe Assembly		
Water Inlet / Outlet			DN125	DN125	DN125
Water Drain / Bleed - Evap		inch	1/2	1/2	1/2
Water Volume		l	141	141	141
Minimum System Water Volume	(8)	l	1853	1853	1853
Max System Operating Pressure		Barg	10	10	10
Flow Rate		l/s	17.1	18.2	19.4
Pressure Drop		kPa	22.4	25.0	27.8

(1) Based on AC units performance at 13/7°C return/supply temperatures, 35°C ambient, 100% water. All performance data is supplied in accordance with BS EN 14511-1:2013
(2) EER = DX cooling output / (compressor input power + fan input power)
(3) ESEER based upon unit operating at 12 / 7 °C return / supply temperature, 35°C ambient.
(4) Nominal Free Cooling output at 16/10°C return/supply temperatures, 2°C ambient, 20% ethylene glycol.
(5) Ambient temperature that maximum nominal DX duty can be achieved using Free Cooling only.
(6) This is a nominal figure based on full compressor duty, actual turndown depends on both condensing and evaporating temperatures.
(7) Based on standard unit without options, machine weight includes refrigerant charge, operating weight includes refrigerant charge and water volume.
For unit weights with waterside options fitted please contact Airedale.
(8) For minimum system water volume calculation, refer to Design Features & Information - Minimum System Water Volume Calculations.
(9) Height based on standard fan, for optional fan dimensions please contact Airedale

Technical Data

TCC12X08S-04, TCC12X10S-04, TCC12X12S-04

Electrical

			50	51	52
ELECTRICAL DATA			TCC12X08S-04	TCC12X10S-04	TCC12X12S-04
Unit Data					
Full Load Amps	(1)	A	321	329	337
Maximum Start Amps		A	176	184	192
Mains Supply		VAC	400V (±10%) 3PH 50Hz		
Recommended Mains Fuse Size		A	355	355	355
Max Mains Incoming Cable Size (Direct to 3 Phase Mains Isolator)		mm²	2x 300mm² (Torque >20Nm)		
Independent Permanent Supply Recommended Fuse Size		A	25	25	25
Independent Permanent Supply		VAC	230V 1PH 50Hz (±10%)		
Max Permanent Incoming Cable Size (Direct to Control Panel Isolator)		mm²	6mm² / 8 AWG		
Control Circuit		VAC	24 VAC & 230VAC (±10%)		
Evaporator					
Immersion Heater Rating		W	500 (2x 250)	500 (2x 250)	500 (2x 250)
External Trace Heating					
Available (fitted by others)		W	500	500	500
Condenser Fan - Per Fan (EC)					
Quantity			8	10	12
Full Load Amps		A	3.9	3.9	3.9
Locked Rotor Amps		A	N/A	N/A	N/A
Motor Rating		kW	2.56	2.56	2.56
Compressor - Per Compressor					
Nominal Run Amps		A	145	145	145
Quantity			2	2	2
Motor Rating		kW	87	87	87
Start Amps		A	2	2	2
Type Of Start			Electronic Soft Start		

(1) Based at full load Conditions and AC Fans
Pump electrical data is avaliable from Airedale upon request.

Technical Data

TCC12X14S-04, TCC12X10L-05, TCC12X12L-06

Mechanical

			53	54	55
Mechanical Data	Notes	Units	TCC12X14S-04	TCC12X10L-05	TCC12X12L-06
Cooling Duty - EC Fans	(1)	kW	520	560	630
Nom Input -Cooling Only		kW	136	186	197
EER	(2)		3.81	3.01	3.20
ESEER	(3)		5.67	5.07	5.15
Nominal Output - Free Cooling	(4)	kW	N/A	N/A	N/A
Ambient when Free Cooling = 100% Nominal DX	(5)	°C	N/A	N/A	N/A
Capacity Steps	(6)	%	15-100%	15-100%	15-100%
Dimensions (H x W x L)	(9)	mm	2800 x 2200 x 8286	2800 x 2200 x 6022	2800 x 2200 x 7154
Machine Weight	(7)	kg	6550	5290	6325
Operating Weight	(7)	kg	6725	5480	6565
Construction Material			Base: Plain Galvanised Steel, Panels: Galvanised Sheet Steel, Epoxy Baked Powder Paint, Light Grey (RAL 7035)		
Evaporator - Type			Flooded - Shell and Tube Evaporator		
Insulation			Class O, UV stable Insulation		
Total Max. Water Flow		l/s	41	50	59
Total Min. Water Flow		l/s	13.3	16.7	19.4
Condenser - Type			Epoxy Coated Aluminium Microchannel & Aluminium Fins		
Face Area Total		m²	33.2	23.7	28.4
Maximum Airflow - EC Fans		m³/s	61.9	44.2	53.0
Condenser Fan & Motor			Sickle Bladed Axial Fan		
Quantity			14	10	12
Diameter		mm	800	800	800
Maximum Speed - EC Fans		rpm	730	730	730
Compressor - Type			Turbocor - Oil Free Compressor		
Quantity			2	2	2
Capacity Control			Variable Frequency Drive (VFD) for Linear Capacity Modulation		
Refrigeration			Single Circuit	Single Circuit	Single Circuit
Refrigerant Pre-charged/ GWP			R134a / 1430		
Charge (Total) CCT1 + CCT2		kg	340	290	445
GWP Tonnes Equivalent CO_2			486	415	636
Refrigeration Control			Electronic Expansion Valve (EEV)		
Water System			Grooved Type Coupling and Pipe Assembly		
Water Inlet / Outlet			DN125	DN150	DN150
Water Drain / Bleed - Evap		inch	1/2	1/2	1/2
Water Volume		l	141	161	219
Minimum System Water Volume	(8)	l	1853	2730	2788
Max System Operating Pressure		Barg	10	10	10
Flow Rate		l/s	20.6	22.2	25.0
Pressure Drop		kPa	30.8	24.5	22.5

(1) Based on AC units performance at 13/7°C return/supply temperatures, 35°C ambient, 100% water. All performance data is supplied in accordance with BS EN 14511-1:2013
(2) EER = DX cooling output / (compressor input power + fan input power)
(3) ESEER based upon unit operating at 12 / 7 °C return / supply temperature, 35°C ambient.
(4) Nominal Free Cooling output at 16/10°C return/supply temperatures, 2°C ambient, 20% ethylene glycol.
(5) Ambient temperature that maximum nominal DX duty can be achieved using Free Cooling only.
(6) This is a nominal figure based on full compressor duty, actual turndown depends on both condensing and evaporating temperatures.
(7) Based on standard unit without options, machine weight includes refrigerant charge, operating weight includes refrigerant charge and water volume.
For unit weights with waterside options fitted please contact Airedale.
(8) For minimum system water volume calculation, refer to Design Features & Information - Minimum System Water Volume Calculations.
(9) Height based on standard fan, for optional fan dimensions please contact Airedale

Technical Data

TCC12X14S-04, TCC12X10L-05, TCC12X12L-06

Electrical

			53	54	55
ELECTRICAL DATA			TCC12X14S-04	TCC12X10L-05	TCC12X12L-06
Unit Data					
Full Load Amps	(1)	A	345	459	467
Maximum Start Amps		A	200	249	257
Mains Supply		VAC	400V (±10%) 3PH 50Hz		
Recommended Mains Fuse Size		A	355	500	500
Max Mains Incoming Cable Size (Direct to 3 Phase Mains Isolator)		mm²	2x 300mm² (Torque >20Nm)		
Independent Permanent Supply Recommended Fuse Size		A	25	25	25
Independent Permanent Supply			230V 1PH 50Hz (±10%)		
Max Permanent Incoming Cable Size (Direct to Control Panel Isolator)		mm²	6mm² / 8 AWG		
Control Circuit		VAC	24 VAC & 230VAC (±10%)		
Evaporator					
Immersion Heater Rating		W	500 (2x 250)	500 (2x 250)	500 (2x 250)
External Trace Heating					
Available (fitted by others)		W	500	500	500
Condenser Fan - Per Fan (EC)					
Quantity			14	10	12
Full Load Amps		A	3.9	3.9	3.9
Locked Rotor Amps		A	N/A	N/A	N/A
Motor Rating		kW	2.56	2.56	2.56
Compressor - Per Compressor					
Nominal Run Amps		A	145	210	210
Quantity			2	2	2
Motor Rating		kW	87	129	129
Start Amps		A	2	2	2
Type Of Start			Electronic Soft Start		

(1) Based at full load Conditions and AC Fans
Pump electrical data is avaliable from Airedale upon request.

Technical Data

TCC12X14L-06, TCC12X16L-06, TCC12X18L-06, TCC12X20L-06

Mechanical

			56	57	58	59
Mechanical Data	Notes	Units	TCC12X14L-06	TCC12X16L-06	TCC12X18L-06	TCC12X20L-06
Cooling Duty - EC Fans	(1)	kW	710	760	810	860
Nom Input -Cooling Only		kW	217	229	242	262
EER	(2)		3.27	3.32	3.35	3.28
ESEER	(3)		5.19	5.34	5.38	5.37
Nominal Output - Free Cooling	(4)	kW	N/A	N/A	N/A	N/A
Ambient when Free Cooling = 100% Nominal DX	(5)	°C	N/A	N/A	N/A	N/A
Capacity Steps	(6)	%	15-100%	15-100%	15-100%	15-100%
Dimensions (H x W x L)	(9)	mm	2800 x 2200 x 8286	2800 x 2200 x 9418	2800 x 2200 x 10550	2800 x 2200 x 11682
Machine Weight	(7)	kg	7110	7490	8345	8965
Operating Weight	(7)	kg	7355	7735	8605	9220
Construction Material			Base: Plain Galvanised Steel, Panels: Galvanised Sheet Steel, Epoxy Baked Powder Paint, Light Grey (RAL 7035)			
Evaporator - Type			Flooded - Shell and Tube Evaporator			
Insulation			Class O, UV stable Insulation			
Total Max. Water Flow		l/s	59	59	59	59
Total Min. Water Flow		l/s	19.4	19.4	19.4	19.4
Condenser - Type			Epoxy Coated Aluminium Microchannel & Aluminium Fins			
Face Area Total		m²	33.2	37.9	42.6	47.4
Maximum Airflow - EC Fans		m³/s	61.9	70.7	79.5	88.4
Condenser Fan & Motor			Sickle Bladed Axial Fan			
Quantity			14	16	18	20
Diameter		mm	800	800	800	800
Maximum Speed - EC Fans		rpm	730	730	730	730
Compressor - Type			Turbocor - Oil Free Compressor			
Quantity			2	2	2	2
Capacity Control			Variable Frequency Drive (VFD) for Linear Capacity Modulation			
Refrigeration			Single Circuit	Single Circuit	Single Circuit	Single Circuit
Refrigerant Pre-charged/ GWP			R134a / 1430			
Charge (Total) CCT1 + CCT2		kg	460	475	480	495
GWP Tonnes Equivalent CO_2			658	679	686	708
Refrigeration Control			Electronic Expansion Valve (EEV)			
Water System			Grooved Type Coupling and Pipe Assembly			
Water Inlet / Outlet			DN150	DN150	DN150	DN150
Water Drain / Bleed - Evap		inch	1/2	1/2	1/2	1/2
Water Volume		l	219	219	219	219
Minimum System Water Volume	(8)	l	2788	2788	2788	2788
Max System Operating Pressure		Barg	10	10	10	10
Flow Rate		l/s	28.2	30.1	32.1	34.1
Pressure Drop		kPa	27.6	31.1	34.8	38.7

(1) Based on AC units performance at 13/7°C return/supply temperatures, 35°C ambient, 100% water. All performance data is supplied in accordance with BS EN 14511-1:2013
(2) EER = DX cooling output / (compressor input power + fan input power)
(3) ESEER based upon unit operating at 12 / 7 °C return / supply temperature, 35°C ambient.
(4) Nominal Free Cooling output at 16/10°C return/supply temperatures, 2°C ambient, 20% ethylene glycol.
(5) Ambient temperature that maximum nominal DX duty can be achieved using Free Cooling only.
(6) This is a nominal figure based on full compressor duty, actual turndown depends on both condensing and evaporating temperatures.
(7) Based on standard unit without options, machine weight includes refrigerant charge, operating weight includes refrigerant charge and water volume. For unit weights with waterside options fitted please contact Airedale.
(8) For minimum system water volume calculation, refer to Design Features & Information - Minimum System Water Volume Calculations.
(9) Height based on standard fan, for optional fan dimensions please contact Airedale

Technical Data

TCC12X14L-06, TCC12X16L-06, TCC12X18L-06, TCC12X20L-06

Electrical

			56	57	58	59
ELECTRICAL DATA			TCC12X14L-06	TCC12X16L-06	TCC12X18L-06	TCC12X20L-06
Unit Data						
Full Load Amps	(1)	A	475	482	490	498
Maximum Start Amps		A	265	272	280	288
Mains Supply		VAC	400V (±10%) 3PH 50Hz			
Recommended Mains Fuse Size		A	500	500	500	500
Max Mains Incoming Cable Size (Direct to 3 Phase Mains Isolator)		mm²	2x 300mm² (Torque >20Nm)			
Independent Permanent Supply Recommended Fuse Size		A	25	25	25	25
Independent Permanent Supply			230V 1PH 50Hz (±10%)			
Max Permanent Incoming Cable Size (Direct to Control Panel Isolator)		mm²	6mm² / 8 AWG			
Control Circuit		VAC	24 VAC & 230VAC (±10%)			
Evaporator						
Immersion Heater Rating		W	500 (2x 250)	500 (2x 250)	500 (2x 250)	500 (2x 250)
External Trace Heating						
Available (fitted by others)		W	500	500	500	500
Condenser Fan - Per Fan (EC)						
Quantity			14	16	18	20
Full Load Amps		A	3.9	3.9	3.9	3.9
Locked Rotor Amps		A	N/A	N/A	N/A	N/A
Motor Rating		kW	2.56	2.56	2.56	2.56
Compressor - Per Compressor						
Nominal Run Amps		A	210	210	210	210
Quantity			2	2	2	2
Motor Rating		kW	129	129	129	129
Start Amps		A	2	2	2	2
Type Of Start			Electronic Soft Start			

(1) Based at full load Conditions and AC Fans
Pump electrical data is avaliable from Airedale upon request.

Technical Data

TCC22X08S-14, TCC22X10S-14, TCC22X12S-14, TCC22X14S-14

Mechanical

			60	61	62	63
Mechanical Data	Notes	Units	TCC22X08S-14	TCC22X10S-14	TCC22X12S-14	TCC22X14S-14
Cooling Duty - EC Fans	(1)	kW	430	460	490	520
Nom Input -Cooling Only		kW	129	128	131	137
EER	(2)		3.33	3.58	3.74	3.81
ESEER	(3)		4.39	4.87	5.28	5.34
Nominal Output - Free Cooling	(4)	kW	N/A	N/A	N/A	N/A
Ambient when Free Cooling = 100% Nominal DX	(5)	°C	N/A	N/A	N/A	N/A
Capacity Steps	(6)	%	15-100%	15-100%	15-100%	15-100%
Dimensions (H x W x L)	(9)	mm	2800 x 2200 x 4890	2800 x 2200 x 6022	2800 x 2200 x 7154	2800 x 2200 x 8286
Machine Weight	(7)	kg	4760	5390	5860	6500
Operating Weight	(7)	kg	4900	5530	6000	6640
Construction Material			Base: Plain Galvanised Steel, Panels: Galvanised Sheet Steel, Epoxy Baked Powder Paint, Light Grey (RAL 7035)			
Evaporator - Type			Flooded - Shell and Tube Evaporator			
Insulation			Class O, UV stable Insulation			
Total Max. Water Flow		l/s	44	44	44	44
Total Min. Water Flow		l/s	14.6	14.6	14.6	14.6
Condenser - Type			Epoxy Coated Aluminium Microchannel & Aluminium Fins			
Face Area Total		m²	18.9	23.7	28.4	33.2
Maximum Airflow - EC Fans		m³/s	35.3	44.2	53.0	61.9
Condenser Fan & Motor			Sickle Bladed Axial Fan			
Quantity			8	10	12	14
Diameter		mm	800	800	800	800
Maximum Speed - EC Fans		rpm	730	730	730	730
Compressor - Type			Turbocor - Oil Free Compressor			
Quantity			2	2	2	2
Capacity Control			Variable Frequency Drive (VFD) for Linear Capacity Modulation			
Refrigeration			Dual Circuit	Dual Circuit	Dual Circuit	Dual Circuit
Refrigerant Pre-charged/ GWP			R134a / 1430			
Charge (Total) CCT1 + CCT2		kg	155 + 150	160 + 160	170 + 165	180 + 170
GWP Tonnes Equivalent CO_2			221.65 + 214.5	228.8 + 228.8	243.1 + 235.95	257.4 + 243.1
Refrigeration Control			Electronic Expansion Valve (EEV)			
Water System			Grooved Type Coupling and Pipe Assembly			
Water Inlet / Outlet			DN125	DN125	DN125	DN125
Water Drain / Bleed - Evap		inch	1/2	1/2	1/2	1/2
Water Volume		l	148	148	148	148
Minimum System Water Volume	(8)	l	1860	1860	1860	1860
Max System Operating Pressure		Barg	10	10	10	10
Flow Rate		l/s	17.1	18.2	19.4	20.6
Pressure Drop		kPa	19.2	21.7	24.2	26.9

(1) Based on AC units performance at 13/7°C return/supply temperatures, 35°C ambient, 100% water. All performance data is supplied in accordance with BS EN 14511-1:2013
(2) EER = DX cooling output / (compressor input power + fan input power)
(3) ESEER based upon unit operating at 12 / 7 °C return / supply temperature, 35°C ambient.
(4) Nominal Free Cooling output at 16/10°C return/supply temperatures, 2°C ambient, 20% ethylene glycol.
(5) Ambient temperature that maximum nominal DX duty can be achieved using Free Cooling only.
(6) This is a nominal figure based on full compressor duty, actual turndown depends on both condensing and evaporating temperatures.
(7) Based on standard unit without options, machine weight includes refrigerant charge, operating weight includes refrigerant charge and water volume. For unit weights with waterside options fitted please contact Airedale.
(8) For minimum system water volume calculation, refer to Design Features & Information - Minimum System Water Volume Calculations.
(9) Height based on standard fan, for optional fan dimensions please contact Airedale

Technical Data

TCC22X08S-14, TCC22X10S-14, TCC22X12S-14, TCC22X14S-14

Electrical

			60	61	62	63
ELECTRICAL DATA			TCC22X08S-14	TCC22X10S-14	TCC22X12S-14	TCC22X14S-14
Unit Data						
Full Load Amps	(1)	A	321	329	337	345
Maximum Start Amps		A	176	184	192	200
Mains Supply		VAC	400V (±10%) 3PH 50Hz			
Recommended Mains Fuse Size		A	355	355	355	355
Max Mains Incoming Cable Size (Direct to 3 Phase Mains Isolator)		mm²	2x 300mm² (Torque >20Nm)			
Independent Permanent Supply Recommended Fuse Size		A	25	25	25	25
Independent Permanent Supply			230V 1PH 50Hz (±10%)			
Max Permanent Incoming Cable Size (Direct to Control Panel Isolator)		mm²	6mm² / 8 AWG			
Control Circuit		VAC	24 VAC & 230VAC (±10%)			
Evaporator						
Immersion Heater Rating		W	340 (2 x170)	340 (2 x170)	340 (2 x170)	340 (2 x170)
External Trace Heating						
Available (fitted by others)		W	500	500	500	500
Condenser Fan - Per Fan (EC)						
Quantity			8	10	12	14
Full Load Amps		A	3.9	3.9	3.9	3.9
Locked Rotor Amps		A	N/A	N/A	N/A	N/A
Motor Rating		kW	2.56	2.56	2.56	2.56
Compressor - Per Compressor						
Nominal Run Amps		A	145	145	145	145
Quantity			2	2	2	2
Motor Rating		kW	87	87	87	87
Start Amps		A	2	2	2	2
Type Of Start			Electronic Soft Start			

(1) Based at full load Conditions and AC Fans
Pump electrical data is avaliable from Airedale upon request.

Technical Data

TCC22X10L-15, TCC22X12L-15, TCC22X14L-15

Mechanical

			64	65	66
Mechanical Data	Notes	Units	TCC22X10L-15	TCC22X12L-15	TCC22X14L-15
Cooling Duty - EC Fans	(1)	kW	520	630	710
Nom Input -Cooling Only		kW	170	196	216
EER	(2)		3.07	3.22	3.29
ESEER	(3)		4.41	4.47	4.68
Nominal Output - Free Cooling	(4)	kW	N/A	N/A	N/A
Ambient when Free Cooling = 100% Nominal DX	(5)	°C	N/A	N/A	N/A
Capacity Steps	(6)	%	15-100%	15-100%	15-100%
Dimensions (H x W x L)	(9)	mm	2800 x 2200 x 6022	2800 x 2200 x 7154	2800 x 2200 x 8286
Machine Weight	(7)	kg	5910	6400	7030
Operating Weight	(7)	kg	6120	6610	7240
Construction Material			Base: Plain Galvanised Steel, Panels: Galvanised Sheet Steel, Epoxy Baked Powder Paint, Light Grey (RAL 7035)		
Evaporator - Type			Flooded - Shell and Tube Evaporator		
Insulation			Class O, UV stable Insulation		
Total Max. Water Flow		l/s	59	59	59
Total Min. Water Flow		l/s	19.7	19.7	19.7
Condenser - Type			Epoxy Coated Aluminium Microchannel & Aluminium Fins		
Face Area Total		m²	23.7	28.4	33.2
Maximum Airflow - EC Fans		m³/s	44.2	53.0	61.9
Condenser Fan & Motor			Sickle Bladed Axial Fan		
Quantity			10	12	14
Diameter		mm	800	800	800
Maximum Speed - EC Fans		rpm	730	730	730
Compressor - Type			Turbocor - Oil Free Compressor		
Quantity			2	2	2
Capacity Control			Variable Frequency Drive (VFD) for Linear Capacity Modulation		
Refrigeration			Dual Circuit	Dual Circuit	Dual Circuit
Refrigerant Pre-charged/ GWP			R134a / 1430		
Charge (Total) CCT1 + CCT2		kg	220 + 220	230 + 225	235 + 230
GWP Tonnes Equivalent CO_2			314.6 + 314.6	328.9 + 321.75	336.05 + 328.9
Refrigeration Control			Electronic Expansion Valve (EEV)		
Water System			Grooved Type Coupling and Pipe Assembly		
Water Inlet / Outlet			DN150	DN150	DN150
Water Drain / Bleed - Evap		inch	1/2	1/2	1/2
Water Volume		l	219	219	219
Minimum System Water Volume	(8)	l	2788	2788	2788
Max System Operating Pressure		Barg	10	10	10
Flow Rate		l/s	22.2	25.0	28.2
Pressure Drop		kPa	18.0	22.2	27.4

(1) Based on AC units performance at 13/7°C return/supply temperatures, 35°C ambient, 100% water. All performance data is supplied in accordance with BS EN 14511-1:2013
(2) EER = DX cooling output / (compressor input power + fan input power)
(3) ESEER based upon unit operating at 12 / 7 °C return / supply temperature, 35°C ambient.
(4) Nominal Free Cooling output at 16/10°C return/supply temperatures, 2°C ambient, 20% ethylene glycol.
(5) Ambient temperature that maximum nominal DX duty can be achieved using Free Cooling only.
(6) This is a nominal figure based on full compressor duty, actual turndown depends on both condensing and evaporating temperatures.
(7) Based on standard unit without options, machine weight includes refrigerant charge, operating weight includes refrigerant charge and water volume.
For unit weights with waterside options fitted please contact Airedale.
(8) For minimum system water volume calculation, refer to Design Features & Information - Minimum System Water Volume Calculations.
(9) Height based on standard fan, for optional fan dimensions please contact Airedale

Technical Data

TCC22X10L-15, TCC22X12L-15, TCC22X14L-15

Electrical

			64	65	66
ELECTRICAL DATA			TCC22X10L-15	TCC22X12L-15	TCC22X14L-15
Unit Data					
Full Load Amps	(1)	A	459	467	475
Maximum Start Amps		A	249	257	265
Mains Supply		VAC	400V (±10%) 3PH 50Hz		
Recommended Mains Fuse Size		A	500	500	500
Max Mains Incoming Cable Size (Direct to 3 Phase Mains Isolator)		mm²	2x 300mm² (Torque >20Nm)		
Independent Permanent Supply Recommended Fuse Size		A	25	25	25
Independent Permanent Supply			230V 1PH 50Hz (±10%)		
Max Permanent Incoming Cable Size (Direct to Control Panel Isolator)		mm²	6mm² / 8 AWG		
Control Circuit		VAC	24 VAC & 230VAC (±10%)		
Evaporator					
Immersion Heater Rating		W	340 (2 x170)	340 (2 x170)	340 (2 x170)
External Trace Heating					
Available (fitted by others)		W	500	500	500
Condenser Fan - Per Fan (EC)					
Quantity			10	12	14
Full Load Amps		A	3.9	3.9	3.9
Locked Rotor Amps		A	N/A	N/A	N/A
Motor Rating		kW	2.56	2.56	2.56
Compressor - Per Compressor					
Nominal Run Amps		A	210	210	210
Quantity			1	2	2
Motor Rating		kW	129	129	129
Start Amps		A	2	2	2
Type Of Start			Electronic Soft Start		

(1) Based at full load Conditions and AC Fans
Pump electrical data is avaliable from Airedale upon request.

Technical Data

TCC22X16L-16, TCC22X18L-16, TCC22X20L-16

Mechanical

			67	68	69
Mechanical Data	Notes	Units	TCC22X16L-16	TCC22X18L-16	TCC22X20L-16
Cooling Duty - EC Fans	(1)	kW	760	810	860
Nom Input -Cooling Only		kW	226	238	257
EER	(2)		3.37	3.40	3.34
ESEER	(3)		4.88	5.00	5.07
Nominal Output - Free Cooling	(4)	kW	N/A	N/A	N/A
Ambient when Free Cooling = 100% Nominal DX	(5)	°C	N/A	N/A	N/A
Capacity Steps	(6)	%	15-100%	15-100%	15-100%
Dimensions (H x W x L)	(9)	mm	2800 x 2200 x 9418	2800 x 2200 x 10550	2800 x 2200 x 11682
Machine Weight	(7)	kg	7790	8220	9010
Operating Weight	(7)	kg	8010	8440	9230
Construction Material			Base: Plain Galvanised Steel, Panels: Galvanised Sheet Steel, Epoxy Baked Powder Paint, Light Grey (RAL 7035)		
Evaporator - Type			Flooded - Shell and Tube Evaporator		
Insulation			Class O, UV stable Insulation		
Total Max. Water Flow		l/s	63	63	63
Total Min. Water Flow		l/s	20.9	20.9	20.9
Condenser - Type			Epoxy Coated Aluminium Microchannel & Aluminium Fins		
Face Area Total		m²	37.9	42.6	47.4
Maximum Airflow - EC Fans		m³/s	70.7	79.5	88.4
Condenser Fan & Motor			Sickle Bladed Axial Fan		
Quantity			16	18	20
Diameter		mm	800	800	800
Maximum Speed - EC Fans		rpm	730	730	730
Compressor - Type			Turbocor - Oil Free Compressor		
Quantity			2	2	2
Capacity Control			Variable Frequency Drive (VFD) for Linear Capacity Modulation		
Refrigeration			Dual Circuit	Dual Circuit	Dual Circuit
Refrigerant Pre-charged/ GWP			R134a / 1430		
Charge (Total) CCT1 + CCT2		kg	235 + 230	240 + 235	250 + 245
GWP Tonnes Equivalent CO_2			336.05 + 328.9	343.2 + 336.05	357.5 + 350.35
Refrigeration Control			Electronic Expansion Valve (EEV)		
Water System			Grooved Type Coupling and Pipe Assembly		
Water Inlet / Outlet			DN150	DN150	DN150
Water Drain / Bleed - Evap		inch	1/2	1/2	1/2
Water Volume		l	227	227	227
Minimum System Water Volume	(8)	l	2796	2796	2796
Max System Operating Pressure		Barg	10	10	10
Flow Rate		l/s	30.1	32.1	34.1
Pressure Drop		kPa	27.7	31.0	34.5

(1) Based on AC units performance at 13/7°C return/supply temperatures, 35°C ambient, 100% water. All performance data is supplied in accordance with BS EN 14511-1:2013
(2) EER = DX cooling output / (compressor input power + fan input power)
(3) ESEER based upon unit operating at 12 / 7 °C return / supply temperature, 35°C ambient.
(4) Nominal Free Cooling output at 16/10°C return/supply temperatures, 2°C ambient, 20% ethylene glycol.
(5) Ambient temperature that maximum nominal DX duty can be achieved using Free Cooling only.
(6) This is a nominal figure based on full compressor duty, actual turndown depends on both condensing and evaporating temperatures.
(7) Based on standard unit without options, machine weight includes refrigerant charge, operating weight includes refrigerant charge and water volume.
For unit weights with waterside options fitted please contact Airedale.
(8) For minimum system water volume calculation, refer to Design Features & Information - Minimum System Water Volume Calculations.
(9) Height based on standard fan, for optional fan dimensions please contact Airedale

Technical Data

TCC22X16L-16, TCC22X18L-16, TCC22X20L-16

Electrical

			67	68	69
ELECTRICAL DATA			TCC22X16L-16	TCC22X18L-16	TCC22X20L-16
Unit Data					
Full Load Amps	(1)	A	482	490	498
Maximum Start Amps		A	272	280	288
Mains Supply		VAC	400V (±10%) 3PH 50Hz		
Recommended Mains Fuse Size		A	500	500	560
Max Mains Incoming Cable Size (Direct to 3 Phase Mains Isolator)		mm²	2x 300mm² (Torque >20Nm)		
Independent Permanent Supply Recommended Fuse Size		A	25	25	25
Independent Permanent Supply			230V 1PH 50Hz (±10%)		
Max Permanent Incoming Cable Size (Direct to Control Panel Isolator)		mm²	6mm² / 8 AWG		
Control Circuit		VAC	24 VAC & 230VAC (±10%)		
Evaporator					
Immersion Heater Rating		W	340 (2 x170)	340 (2 x170)	340 (2 x170)
External Trace Heating					
Available (fitted by others)		W	500	500	500
Condenser Fan - Per Fan (EC)					
Quantity			16	18	20
Full Load Amps		A	3.9	3.9	3.9
Locked Rotor Amps		A	N/A	N/A	N/A
Motor Rating		kW	2.56	2.56	2.56
Compressor - Per Compressor					
Nominal Run Amps		A	210	210	210
Quantity			2	2	2
Motor Rating		kW	129	129	129
Start Amps		A	2	2	2
Type Of Start			Electronic Soft Start		

(1) Based at full load Conditions and AC Fans
Pump electrical data is avaliable from Airedale upon request.

Technical Data

TCC23X12S-17, TCC23X14S-17, TCC23X16S-17, TCC23X18S-17

Mechanical

			70	71	72	73
Mechanical Data	Notes	Units	TCC23X12S-17	TCC23X14S-17	TCC23X16S-17	TCC23X18S-17
Cooling Duty - EC Fans	(1)	kW	590	640	690	740
Nom Input -Cooling Only		kW	176	183	192	201
EER	(2)		3.35	3.50	3.60	3.67
ESEER	(3)		5.29	5.38	5.43	5.49
Nominal Output - Free Cooling	(4)	kW	N/A	N/A	N/A	N/A
Ambient when Free Cooling = 100% Nominal DX	(5)	°C	N/A	N/A	N/A	N/A
Capacity Steps	(6)	%	10-100%	10-100%	10-100%	10-100%
Dimensions (H x W x L)	(9)	mm	2800 x 2200 x 7154	2800 x 2200 x 8286	2800 x 2200 x 9418	2800 x 2200 x 10550
Machine Weight	(7)	kg	6880	7440	7850	8530
Operating Weight	(7)	kg	7110	7670	8080	8760
Construction Material			Base: Plain Galvanised Steel, Panels: Galvanised Sheet Steel, Epoxy Baked Powder Paint, Light Grey (RAL 7035)			
Evaporator - Type			Flooded - Shell and Tube Evaporator			
Insulation			Class O, UV stable Insulation			
Total Max. Water Flow		l/s	67	67	67	67
Total Min. Water Flow		l/s	22.3	22.3	22.3	22.3
Condenser - Type			Epoxy Coated Aluminium Microchannel & Aluminium Fins			
Face Area Total		m²	28.4	33.2	37.9	42.6
Maximum Airflow - EC Fans		m³/s	53.0	61.9	70.7	79.5
Condenser Fan & Motor			Sickle Bladed Axial Fan			
Quantity			12	14	16	18
Diameter		mm	800	800	800	800
Maximum Speed - EC Fans		rpm	730	730	730	730
Compressor - Type			Turbocor - Oil Free Compressor			
Quantity			3	3	3	3
Capacity Control			Variable Frequency Drive (VFD) for Linear Capacity Modulation			
Refrigeration			Dual Circuit	Dual Circuit	Dual Circuit	Dual Circuit
Refrigerant Pre-charged/ GWP			R134a / 1430			
Charge (Total) CCT1 + CCT2		kg	330 + 170	340 + 175	355 + 180	355 + 185
GWP Tonnes Equivalent CO_2			471.9 + 243.1	486.2 + 250.25	507.65 + 257.4	507.65 + 264.55
Refrigeration Control			Electronic Expansion Valve (EEV)			
Water System			Grooved Type Coupling and Pipe Assembly			
Water Inlet / Outlet			DN150	DN150	DN150	DN150
Water Drain / Bleed - Evap		inch	1/2	1/2	1/2	1/2
Water Volume		l	235	235	235	235
Minimum System Water Volume	(8)	l	1948	1948	1948	1948
Max System Operating Pressure		Barg	10	10	10	10
Flow Rate		l/s	23.4	25.4	27.4	29.4
Pressure Drop		kPa	15.8	18.3	21.0	23.8

(1) Based on AC units performance at 13/7°C return/supply temperatures, 35°C ambient, 100% water. All performance data is supplied in accordance with BS EN 14511-1:2013
(2) EER = DX cooling output / (compressor input power + fan input power)
(3) ESEER based upon unit operating at 12 / 7 °C return / supply temperature, 35°C ambient.
(4) Nominal Free Cooling output at 16/10°C return/supply temperatures, 2°C ambient, 20% ethylene glycol.
(5) Ambient temperature that maximum nominal DX duty can be achieved using Free Cooling only.
(6) This is a nominal figure based on full compressor duty, actual turndown depends on both condensing and evaporating temperatures.
(7) Based on standard unit without options, machine weight includes refrigerant charge, operating weight includes refrigerant charge and water volume. For unit weights with waterside options fitted please contact Airedale.
(8) For minimum system water volume calculation, refer to Design Features & Information - Minimum System Water Volume Calculations.
(9) Height based on standard fan, for optional fan dimensions please contact Airedale

Technical Data

TCC23X12S-17, TCC23X14S-17, TCC23X16S-17, TCC23X18S-17

Electrical

			70	71	72	73
ELECTRICAL DATA			TCC23X12S-17	TCC23X14S-17	TCC23X16S-17	TCC23X18S-17
Unit Data						
Full Load Amps	(1)	A	482	490	497	505
Maximum Start Amps		A	337	345	352	360
Mains Supply		VAC	400V (±10%) 3PH 50Hz			
Recommended Mains Fuse Size		A	500	500	560	560
Max Mains Incoming Cable Size (Direct to 3 Phase Mains Isolator)		mm²	2x 300mm² (Torque >20Nm)			
Independent Permanent Supply Recommended Fuse Size		A	25	25	25	25
Independent Permanent Supply			230V 1PH 50Hz (±10%)			
Max Permanent Incoming Cable Size (Direct to Control Panel Isolator)		mm²	6mm² / 8 AWG			
Control Circuit		VAC	24 VAC & 230VAC (±10%)			
Evaporator						
Immersion Heater Rating		W	340 (2 x170)	340 (2 x170)	340 (2 x170)	340 (2 x170)
External Trace Heating						
Available (fitted by others)		W	500	500	500	500
Condenser Fan - Per Fan (EC)						
Quantity			12	14	16	18
Full Load Amps		A	3.9	3.9	3.9	3.9
Locked Rotor Amps		A	N/A	N/A	N/A	N/A
Motor Rating		kW	2.56	2.56	2.56	2.56
Compressor - Per Compressor						
Nominal Run Amps		A	145	145	145	145
Quantity			3	3	3	3
Motor Rating		kW	87	87	87	87
Start Amps		A	2	2	2	2
Type Of Start			Electronic Soft Start			

(1) Based at full load Conditions and AC Fans
Pump electrical data is avaliable from Airedale upon request.

Technical Data

TCC23X16L-19, TCC23X18L-19

Mechanical

			74	75
Mechanical Data	Notes	Units	TCC23X16L-19	TCC23X18L-19
Cooling Duty - EC Fans	(1)	kW	780	840
Nom Input -Cooling Only		kW	252	261
EER	(2)		3.09	3.22
ESEER	(3)		5.03	5.10
Nominal Output - Free Cooling	(4)	kW	N/A	N/A
Ambient when Free Cooling = 100% Nominal DX	(5)	°C	N/A	N/A
Capacity Steps	(6)	%	10-100%	10-100%
Dimensions (H x W x L)	(9)	mm	2800 x 2200 x 9418	2800 x 2200 x 10550
Machine Weight	(7)	kg	8600	9270
Operating Weight	(7)	kg	8880	9550
Construction Material			Base: Plain Galvanised Steel, Panels: Galvanised Sheet Steel, Epoxy Baked Powder Paint, Light Grey (RAL 7035)	
Evaporator - Type			Flooded - Shell and Tube Evaporator	
Insulation			Class O, UV stable Insulation	
Total Max. Water Flow		l/s	86	86
Total Min. Water Flow		l/s	28.8	28.8
Condenser - Type			Epoxy Coated Aluminium Microchannel & Aluminium Fins	
Face Area Total		m²	37.9	42.6
Maximum Airflow - EC Fans		m³/s	70.7	79.5
Condenser Fan & Motor			Sickle Bladed Axial Fan	
Quantity			16	18
Diameter		mm	800	800
Maximum Speed - EC Fans		rpm	730	730
Compressor - Type			Turbocor - Oil Free Compressor	
Quantity			3	3
Capacity Control			Variable Frequency Drive (VFD) for Linear Capacity Modulation	
Refrigeration			Dual Circuit	Dual Circuit
Refrigerant Pre-charged/ GWP			R134a / 1430	
Charge (Total) CCT1 + CCT2		kg	460 + 225	465 + 235
GWP Tonnes Equivalent CO_2			657.8 + 321.75	664.95 + 336.05
Refrigeration Control			Electronic Expansion Valve (EEV)	
Water System			Grooved Type Coupling and Pipe Assembly	
Water Inlet / Outlet			DN200	DN200
Water Drain / Bleed - Evap		inch	1/2	1/2
Water Volume		l	282	282
Minimum System Water Volume	(8)	l	2851	2851
Max System Operating Pressure		Barg	10	10
Flow Rate		l/s	30.9	33.3
Pressure Drop		kPa	16.2	18.6

(1) Based on AC units performance at 13/7°C return/supply temperatures, 35°C ambient, 100% water. All performance data is supplied in accordance with BS EN 14511-1:2013
(2) EER = DX cooling output / (compressor input power + fan input power)
(3) ESEER based upon unit operating at 12 / 7 °C return / supply temperature, 35°C ambient.
(4) Nominal Free Cooling output at 16/10°C return/supply temperatures, 2°C ambient, 20% ethylene glycol.
(5) Ambient temperature that maximum nominal DX duty can be achieved using Free Cooling only.
(6) This is a nominal figure based on full compressor duty, actual turndown depends on both condensing and evaporating temperatures.
(7) Based on standard unit without options, machine weight includes refrigerant charge, operating weight includes refrigerant charge and water volume.
For unit weights with waterside options fitted please contact Airedale.
(8) For minimum system water volume calculation, refer to Design Features & Information - Minimum System Water Volume Calculations.
(9) Height based on standard fan, for optional fan dimensions please contact Airedale

Technical Data

TCC23X16L-19, TCC23X18L-19

Electrical

			74	75
ELECTRICAL DATA			TCC23X16L-19	TCC23X18L-19
Unit Data				
Full Load Amps	(1)	A	692	700
Maximum Start Amps		A	482	490
Mains Supply		VAC	400V (±10%) 3PH 50Hz	
Recommended Mains Fuse Size		A	710	710
Max Mains Incoming Cable Size (Direct to 3 Phase Mains Isolator)		mm²	2x 300mm² (Torque >20Nm)	
Independent Permanent Supply Recommended Fuse Size		A	25	25
Independent Permanent Supply			230V 1PH 50Hz (±10%)	
Max Permanent Incoming Cable Size (Direct to Control Panel Isolator)		mm²	6mm² / 8 AWG	
Control Circuit		VAC	24 VAC & 230VAC (±10%)	
Evaporator				
Immersion Heater Rating		W	500 (2x 250)	500 (2x 250)
External Trace Heating				
Available (fitted by others)		W	500	500
Condenser Fan - Per Fan (EC)				
Quantity			16	18
Full Load Amps		A	3.9	3.9
Locked Rotor Amps		A	N/A	N/A
Motor Rating		kW	2.56	2.56
Compressor - Per Compressor				
Nominal Run Amps		A	210	210
Quantity			3	3
Motor Rating		kW	129	129
Start Amps		A	2	2
Type Of Start			Electronic Soft Start	

(1) Based at full load Conditions and AC Fans
Pump electrical data is avaliable from Airedale upon request.

Technical Data

TCC23X20L-20, TCC23X22L-20, TCC23X24L-20

Mechanical

			76	77	78
Mechanical Data	Notes	Units	TCC23X20L-20	TCC23X22L-20	TCC23X24L-20
Cooling Duty - EC Fans	(1)	kW	900	960	1020
Nom Input -Cooling Only		kW	271	282	296
EER	(2)		3.32	3.41	3.44
ESEER	(3)		5.22	5.25	5.32
Nominal Output - Free Cooling	(4)	kW	N/A	N/A	N/A
Ambient when Free Cooling = 100% Nominal DX	(5)	°C	N/A	N/A	N/A
Capacity Steps	(6)	%	10-100%	10-100%	10-100%
Dimensions (H x W x L)	(9)	mm	2800 x 2200 x 11682	2800 x 2200 x 12814	2800 x 2200 x 13946
Machine Weight	(7)	kg	10190	10800	11440
Operating Weight	(7)	kg	10480	11090	11730
Construction Material			Base: Plain Galvanised Steel, Panels: Galvanised Sheet Steel, Epoxy Baked Powder Paint, Light Grey (RAL 7035)		
Evaporator - Type			Flooded - Shell and Tube Evaporator		
Insulation			Class O, UV stable Insulation		
Total Max. Water Flow		l/s	91	91	91
Total Min. Water Flow		l/s	30.4	30.4	30.4
Condenser - Type			Epoxy Coated Aluminium Microchannel & Aluminium Fins		
Face Area Total		m²	47.4	52.1	56.8
Maximum Airflow - EC Fans		m³/s	88.4	97.2	106.0
Condenser Fan & Motor			Sickle Bladed Axial Fan		
Quantity			20	22	24
Diameter		mm	800	800	800
Maximum Speed - EC Fans		rpm	730	730	730
Compressor - Type			Turbocor - Oil Free Compressor		
Quantity			3	3	3
Capacity Control			Variable Frequency Drive (VFD) for Linear Capacity Modulation		
Refrigeration			Dual Circuit	Dual Circuit	Dual Circuit
Refrigerant Pre-charged/ GWP			R134a / 1430		
Charge (Total) CCT1 + CCT2		kg	465 + 235	475 + 235	480 + 250
GWP Tonnes Equivalent CO_2			664.95 + 336.05	679.25 + 336.05	686.4 + 357.5
Refrigeration Control			Electronic Expansion Valve (EEV)		
Water System			Grooved Type Coupling and Pipe Assembly		
Water Inlet / Outlet			DN200	DN200	DN200
Water Drain / Bleed - Evap		inch	1/2	1/2	1/2
Water Volume		l	292	292	292
Minimum System Water Volume	(8)	l	2861	2861	2861
Max System Operating Pressure		Barg	10	10	10
Flow Rate		l/s	35.7	38.1	40.5
Pressure Drop		kPa	19.2	21.6	24.1

(1) Based on AC units performance at 13/7°C return/supply temperatures, 35°C ambient, 100% water. All performance data is supplied in accordance with BS EN 14511-1:2013
(2) EER = DX cooling output / (compressor input power + fan input power)
(3) ESEER based upon unit operating at 12 / 7 °C return / supply temperature, 35°C ambient.
(4) Nominal Free Cooling output at 16/10°C return/supply temperatures, 2°C ambient, 20% ethylene glycol.
(5) Ambient temperature that maximum nominal DX duty can be achieved using Free Cooling only.
(6) This is a nominal figure based on full compressor duty, actual turndown depends on both condensing and evaporating temperatures.
(7) Based on standard unit without options, machine weight includes refrigerant charge, operating weight includes refrigerant charge and water volume.
For unit weights with waterside options fitted please contact Airedale.
(8) For minimum system water volume calculation, refer to Design Features & Information - Minimum System Water Volume Calculations.
(9) Height based on standard fan, for optional fan dimensions please contact Airedale

Technical Data

TCC23X20L-20, TCC23X22L-20, TCC23X24L-20

Electrical

			76	77	78
ELECTRICAL DATA			TCC23X20L-20	TCC23X22L-20	TCC23X24L-20
Unit Data					
Full Load Amps	(1)	A	708	716	724
Maximum Start Amps		A	498	506	514
Mains Supply		VAC	400V (±10%) 3PH 50Hz		
Recommended Mains Fuse Size		A	710	750	750
Max Mains Incoming Cable Size (Direct to 3 Phase Mains Isolator)		mm²	2x 300mm² (Torque >20Nm)		
Independent Permanent Supply Recommended Fuse Size		A	25	25	25
Independent Permanent Supply			230V 1PH 50Hz (±10%)		
Max Permanent Incoming Cable Size (Direct to Control Panel Isolator)		mm²	6mm² / 8 AWG		
Control Circuit		VAC	24 VAC & 230VAC (±10%)		
Evaporator					
Immersion Heater Rating		W	500 (2x 250)	500 (2x 250)	500 (2x 250)
External Trace Heating					
Available (fitted by others)		W	500	500	500
Condenser Fan - Per Fan (EC)					
Quantity			20	22	24
Full Load Amps		A	3.9	3.9	3.9
Locked Rotor Amps		A	N/A	N/A	N/A
Motor Rating		kW	2.56	2.56	2.56
Compressor - Per Compressor					
Nominal Run Amps		A	210	210	210
Quantity			3	3	3
Motor Rating		kW	129	129	129
Start Amps		A	2	2	2
Type Of Start			Electronic Soft Start		

(1) Based at full load Conditions and AC Fans
Pump electrical data is avaliable from Airedale upon request.

Technical Data

TCC24X16S-18, TCC24X18S-18, TCC24X20S-18

Mechanical

			79	80	81
Mechanical Data	Notes	Units	TCC24X16S-18	TCC24X18S-18	TCC24X20S-18
Cooling Duty - EC Fans	(1)	kW	800	830	860
Nom Input -Cooling Only		kW	243	241	242
EER	(2)		3.29	3.45	3.55
ESEER	(3)		5.31	5.39	5.45
Nominal Output - Free Cooling	(4)	kW	N/A	N/A	N/A
Ambient when Free Cooling = 100% Nominal DX	(5)	°C	N/A	N/A	N/A
Capacity Steps	(6)	%	7.5-100%	7.5-100%	7.5-100%
Dimensions (H x W x L)	(9)	mm	2800 x 2200 x 9418	2800 x 2200 x 10550	2800 x 2200 x 11682
Machine Weight	(7)	kg	8580	8910	9860
Operating Weight	(7)	kg	8830	9160	10110
Construction Material			Base: Plain Galvanised Steel, Panels: Galvanised Sheet Steel, Epoxy Baked Powder Paint, Light Grey (RAL 7035)		
Evaporator - Type			Flooded - Shell and Tube Evaporator		
Insulation			Class O, UV stable Insulation		
Total Max. Water Flow		l/s	78	78	78
Total Min. Water Flow		l/s	25.8	25.8	25.8
Condenser - Type			Epoxy Coated Aluminium Microchannel & Aluminium Fins		
Face Area Total		m²	37.9	42.6	47.4
Maximum Airflow - EC Fans		m³/s	70.7	79.5	88.4
Condenser Fan & Motor			Sickle Bladed Axial Fan		
Quantity			16	18	20
Diameter		mm	800	800	800
Maximum Speed - EC Fans		rpm	730	730	730
Compressor - Type			Turbocor - Oil Free Compressor		
Quantity			4	4	4
Capacity Control			Variable Frequency Drive (VFD) for Linear Capacity Modulation		
			Dual Circuit		
			Dual Circuit		
Refrigeration			Dual Circuit		
Refrigerant Pre-charged/ GWP			R134a / 1430		
Charge (Total) CCT1 + CCT2		kg	250 + 250	260 + 250	270 + 265
GWP Tonnes Equivalent CO_2			357.5 + 357.5	371.8 + 357.5	386.1 + 378.95
Refrigeration Control			Electronic Expansion Valve (EEV)		
Water System			Grooved Type Coupling and Pipe Assembly		
Water Inlet / Outlet			DN200	DN200	DN200
Water Drain / Bleed - Evap		inch	0.5	0.5	0.5
Water Volume		l	260	260	260
Minimum System Water Volume	(8)	l	1972	1972	1972
Max System Operating Pressure		Barg	10.0	10.0	10.0
Flow Rate		l/s	31.3	32.5	34.1
Pressure Drop		kPa	20.1	21.5	23.4

(1) Based on AC units performance at 13/7°C return/supply temperatures, 35°C ambient, 100% water. All performance data is supplied in accordance with BS EN 14511-1:2013
(2) EER = DX cooling output / (compressor input power + fan input power)
(3) ESEER based upon unit operating at 12 / 7 °C return / supply temperature, 35°C ambient.
(4) Nominal Free Cooling output at 16/10°C return/supply temperatures, 2°C ambient, 20% ethylene glycol.
(5) Ambient temperature that maximum nominal DX duty can be achieved using Free Cooling only.
(6) This is a nominal figure based on full compressor duty, actual turndown depends on both condensing and evaporating temperatures.
(7) Based on standard unit without options, machine weight includes refrigerant charge, operating weight includes refrigerant charge and water volume. For unit weights with waterside options fitted please contact Airedale.
(8) For minimum system water volume calculation, refer to Design Features & Information - Minimum System Water Volume Calculations.
(9) Height based on standard fan, for optional fan dimensions please contact Airedale

Technical Data

TCC24X16S-18, TCC24X18S-18, TCC24X20S-18

Electrical

			79	80	81
ELECTRICAL DATA			TCC24X16S-18	TCC24X18S-18	TCC24X20S-18
Unit Data					
Full Load Amps	(1)	A	642	650	658
Maximum Start Amps		A	497	505	513
Mains Supply		VAC	400V (±10%) 3PH 50Hz		
Recommended Mains Fuse Size		A	670	670	670
Max Mains Incoming Cable Size (Direct to 3 Phase Mains Isolator)		mm²	2x 300mm² (Torque >20Nm)		
Independent Permanent Supply Recommended Fuse Size		A	25	25	25
Independent Permanent Supply			230V 1PH 50Hz (±10%)		
Max Permanent Incoming Cable Size (Direct to Control Panel Isolator)		mm²	6mm² / 8 AWG		
Control Circuit		VAC	24 VAC & 230VAC (±10%)		
Evaporator					
Immersion Heater Rating		W	340 (2x 170)	340 (2x 170)	340 (2x 170)
External Trace Heating					
Available (fitted by others)		W	500	500	500
Condenser Fan - Per Fan (EC)					
Quantity			16	18	20
Full Load Amps		A	3.9	3.9	3.9
Locked Rotor Amps		A	N/A	N/A	N/A
Motor Rating		kW	2.56	2.56	2.56
Compressor - Per Compressor					
Nominal Run Amps		A	145	145	145
Quantity			4	4	4
Motor Rating		kW	87	87	87
Start Amps		A	2	2	2
Type Of Start			Electronic Soft Start		

(1) Based at full load Conditions and AC Fans
Pump electrical data is avaliable from Airedale upon request.

Technical Data

TCC24X22S-18, TCC24X24S-18

Mechanical

			82	83
Mechanical Data	Notes	Units	TCC24X22S-18	TCC24X24S-18
Cooling Duty - EC Fans	(1)	kW	910	960
Nom Input -Cooling Only		kW	252	263
EER	(2)		3.61	3.65
ESEER	(3)		5.48	5.59
Nominal Output - Free Cooling	(4)	kW	N/A	N/A
Ambient when Free Cooling = 100% Nominal DX	(5)	°C	N/A	N/A
Capacity Steps	(6)	%	7.5-100%	7.5-100%
Dimensions (H x W x L)	(9)	mm	2800 x 2200 x 12814	2800 x 2200 x 13946
Machine Weight	(7)	kg	10480	11110
Operating Weight	(7)	kg	10730	11360
Construction Material			Base: Plain Galvanised Steel, Panels: Galvanised Sheet Steel, Epoxy Baked Powder Paint, Light Grey (RAL 7035)	
Evaporator - Type			Flooded - Shell and Tube Evaporator	
Insulation			Class O, UV stable Insulation	
Total Max. Water Flow		l/s	78	78
Total Min. Water Flow		l/s	25.8	25.8
Condenser - Type			Epoxy Coated Aluminium Microchannel & Aluminium Fins	
Face Area Total		m²	52.1	56.8
Maximum Airflow - EC Fans		m³/s	97.2	106.0
Condenser Fan & Motor			Sickle Bladed Axial Fan	
Quantity			22	24
Diameter		mm	800	800
Maximum Speed - EC Fans		rpm	730	730
Compressor - Type			Turbocor - Oil Free Compressor	
Quantity			4	4
Capacity Control			Variable Frequency Drive (VFD) for Linear Capacity Modulation	
Refrigeration			Dual Circuit	Dual Circuit
Refrigerant Pre-charged/ GWP			R134a / 1430	
Charge (Total) CCT1 + CCT2		kg	270 + 275	285 + 280
GWP Tonnes Equivalent CO_2			386.1 + 393.25	407.55 + 400.4
Refrigeration Control			Electronic Expansion Valve (EEV)	
Water System			Grooved Type Coupling and Pipe Assembly	
Water Inlet / Outlet			DN200	DN200
Water Drain / Bleed - Evap		inch	1/2	1/2
Water Volume		l	260	260
Minimum System Water Volume	(8)	l	1972	1972
Max System Operating Pressure		Barg	10	10
Flow Rate		l/s	36.1	38.1
Pressure Drop		kPa	25.8	28.4

(1) Based on AC units performance at 13/7°C return/supply temperatures, 35°C ambient, 100% water. All performance data is supplied in accordance with BS EN 14511-1:2013
(2) EER = DX cooling output / (compressor input power + fan input power)
(3) ESEER based upon unit operating at 12 / 7 °C return / supply temperature, 35°C ambient.
(4) Nominal Free Cooling output at 16/10°C return/supply temperatures, 2°C ambient, 20% ethylene glycol.
(5) Ambient temperature that maximum nominal DX duty can be achieved using Free Cooling only.
(6) This is a nominal figure based on full compressor duty, actual turndown depends on both condensing and evaporating temperatures.
(7) Based on standard unit without options, machine weight includes refrigerant charge, operating weight includes refrigerant charge and water volume.
For unit weights with waterside options fitted please contact Airedale.
(8) For minimum system water volume calculation, refer to Design Features & Information - Minimum System Water Volume Calculations.
(9) Height based on standard fan, for optional fan dimensions please contact Airedale

Technical Data

TCC24X22S-18, TCC24X24S-18

Electrical

			82	83
ELECTRICAL DATA			TCC24X22S-18	TCC24X24S-18
Unit Data				
Full Load Amps	(1)	A	666	674
Maximum Start Amps		A	521	529
Mains Supply		VAC	400V (±10%) 3PH 50Hz	
Recommended Mains Fuse Size		A	670	710
Max Mains Incoming Cable Size (Direct to 3 Phase Mains Isolator)		mm²	2x 300mm² (Torque >20Nm)	
Independent Permanent Supply Recommended Fuse Size		A	25	25
Independent Permanent Supply			230V 1PH 50Hz (±10%)	
Max Permanent Incoming Cable Size (Direct to Control Panel Isolator)		mm²	6mm² / 8 AWG	
Control Circuit		VAC	24 VAC & 230VAC (±10%)	
Evaporator				
Immersion Heater Rating		W	340 (2x 170)	340 (2x 170)
External Trace Heating				
Available (fitted by others)		W	500	500
Condenser Fan - Per Fan (EC)				
Quantity			22	24
Full Load Amps		A	3.9	3.9
Locked Rotor Amps		A	N/A	N/A
Motor Rating		kW	2.56	2.56
Compressor - Per Compressor				
Nominal Run Amps		A	145	145
Quantity			4	4
Motor Rating		kW	87	87
Start Amps		A	2	2
Type Of Start			Electronic Soft Start	

(1) Based at full load Conditions and AC Fans
Pump electrical data is avaliable from Airedale upon request.

Technical Data

TCC24X20L-21, TCC24X22L-21, TCC24X24L-21

Mechanical

			84	85	86
Mechanical Data	Notes	Units	TCC24X20L-21	TCC24X22L-21	TCC24X24L-21
Cooling Duty - EC Fans	(1)	kW	1000	1040	1080
Nom Input -Cooling Only		kW	339	335	338
EER	(2)		2.95	3.11	3.20
ESEER	(3)		5.19	5.27	5.33
Nominal Output - Free Cooling	(4)	kW	N/A	N/A	N/A
Ambient when Free Cooling = 100% Nominal DX	(5)	°C	N/A	N/A	N/A
Capacity Steps	(6)	%	7.5-100%	7.5-100%	7.5-100%
Dimensions (H x W x L)	(9)	mm	2800 x 2200 x 11682	2800 x 2200 x 12814	2800 x 2200 x 13946
Machine Weight	(7)	kg	10720	11360	11990
Operating Weight	(7)	kg	11040	11680	12310
Construction Material			Base: Plain Galvanised Steel, Panels: Galvanised Sheet Steel, Epoxy Baked Powder Paint, Light Grey (RAL 7035)		
Evaporator - Type			Flooded - Shell and Tube Evaporator		
Insulation			Class O, UV stable Insulation		
Total Max. Water Flow		l/s	108	108	108
Total Min. Water Flow		l/s	36.2	36.2	36.2
Condenser - Type			Epoxy Coated Aluminium Microchannel & Aluminium Fins		
Face Area Total		m²	47.4	52.1	56.8
Maximum Airflow - EC Fans		m³/s	88.4	97.2	106.0
Condenser Fan & Motor			Sickle Bladed Axial Fan		
Quantity			20	22	24
Diameter		mm	800	800	800
Maximum Speed - EC Fans		rpm	730	730	730
Compressor - Type			Turbocor - Oil Free Compressor		
Quantity			4	4	4
Capacity Control			Variable Frequency Drive (VFD) for Linear Capacity Modulation		
Refrigeration			Dual Circuit	Dual Circuit	Dual Circuit
Refrigerant Pre-charged/ GWP			R134a / 1430		
Charge (Total) CCT1 + CCT2		kg	360 + 360	365 + 370	380 + 380
GWP Tonnes Equivalent CO_2			514.8 + 514.8	521.95 + 529.1	543.4 + 543.4
Refrigeration Control			Electronic Expansion Valve (EEV)		
Water System			Grooved Type Coupling and Pipe Assembly		
Water Inlet / Outlet			DN200	DN200	DN200
Water Drain / Bleed - Evap		inch	1/2	1/2	1/2
Water Volume		l	330	330	330
Minimum System Water Volume	(8)	l	2898	2898	2898
Max System Operating Pressure		Barg	10	10	10
Flow Rate		l/s	39.7	41.3	42.8
Pressure Drop		kPa	16.7	17.9	19.1

(1) Based on AC units performance at 13/7°C return/supply temperatures, 35°C ambient, 100% water. All performance data is supplied in accordance with BS EN 14511-1:2013
(2) EER = DX cooling output / (compressor input power + fan input power)
(3) ESEER based upon unit operating at 12 / 7 °C return / supply temperature, 35°C ambient.
(4) Nominal Free Cooling output at 16/10°C return/supply temperatures, 2°C ambient, 20% ethylene glycol.
(5) Ambient temperature that maximum nominal DX duty can be achieved using Free Cooling only.
(6) This is a nominal figure based on full compressor duty, actual turndown depends on both condensing and evaporating temperatures.
(7) Based on standard unit without options, machine weight includes refrigerant charge, operating weight includes refrigerant charge and water volume.
For unit weights with waterside options fitted please contact Airedale.
(8) For minimum system water volume calculation, refer to Design Features & Information - Minimum System Water Volume Calculations.
(9) Height based on standard fan, for optional fan dimensions please contact Airedale

Technical Data

TCC24X20L-21, TCC24X22L-21, TCC24X24L-21

Electrical

			84	85	86
ELECTRICAL DATA			TCC24X20L-21	TCC24X22L-21	TCC24X24L-21
Unit Data					
Full Load Amps	(1)	A	918	926	934
Maximum Start Amps		A	708	716	724
Mains Supply		VAC	400V (±10%) 3PH 50Hz		
Recommended Mains Fuse Size		A	1000	1000	1000
Max Mains Incoming Cable Size (Direct to 3 Phase Mains Isolator)		mm²	2x 300mm² (Torque >20Nm)		
Independent Permanent Supply Recommended Fuse Size		A	25	25	25
Independent Permanent Supply			230V 1PH 50Hz (±10%)		
Max Permanent Incoming Cable Size (Direct to Control Panel Isolator)		mm²	6mm² / 8 AWG		
Control Circuit		VAC	24 VAC & 230VAC (±10%)		
Evaporator					
Immersion Heater Rating		W	500 (2x 250)	500 (2x 250)	500 (2x 250)
External Trace Heating					
Available (fitted by others)		W	500	500	500
Condenser Fan - Per Fan (EC)					
Quantity			20	22	24
Full Load Amps		A	3.9	3.9	3.9
Locked Rotor Amps		A	N/A	N/A	N/A
Motor Rating		kW	2.56	2.56	2.56
Compressor - Per Compressor					
Nominal Run Amps		A	210	210	210
Quantity			4	4	4
Motor Rating		kW	129	129	129
Start Amps		A	2	2	2
Type Of Start			Electronic Soft Start		

(1) Based at full load Conditions and AC Fans
Pump electrical data is avaliable from Airedale upon request.

Sound Data - TCC

TCC - EC Fans

		EC Single Octave Sound Levels (dB)								
		63 Hz	125 Hz	250 Hz	500 Hz	1000 Hz	2000 Hz	4000 Hz	8000	Overall [dB(A)]
TCC11R04S-01	Sound Power	88	86	85	81	82	78	81	83	88
	Sound Pressure @10m	56	54	53	49	50	45	49	51	56
TCC11R06S-01	Sound Power	84	83	83	79	79	76	81	83	87
	Sound Pressure @10m	51	50	50	46	47	43	49	51	55
TCC11R08S-01	Sound Power	85	84	81	78	78	75	81	83	87
	Sound Pressure @10m	52	51	49	46	45	42	48	50	54
TCC11R06L-02	Sound Power	92	89	87	84	85	81	80	81	90
	Sound Pressure @10m	60	57	55	52	53	48	48	49	57
TCC11R08L-03	Sound Power	91	89	87	84	85	80	80	81	90
	Sound Pressure @10m	58	56	55	51	53	48	48	49	57
TCC11R10L-03	Sound Power	88	87	86	82	84	79	80	81	89
	Sound Pressure @10m	56	54	53	50	52	46	47	49	56
TCC12R08S-04	Sound Power	91	89	88	84	85	81	84	86	91
	Sound Pressure @10m	59	57	55	52	52	48	52	53	59
TCC12R10S-04	Sound Power	89	87	87	83	84	79	84	86	90
	Sound Pressure @10m	56	54	54	50	51	47	51	53	58
TCC12R12S-04	Sound Power	87	86	86	82	83	79	84	86	90
	Sound Pressure @10m	54	53	53	49	50	46	51	53	57
TCC12R14S-04	Sound Power	86	85	85	81	82	78	84	86	90
	Sound Pressure @10m	53	52	52	49	49	45	51	53	57
TCC12R10L-05	Sound Power	94	91	90	86	88	83	83	84	92
	Sound Pressure @10m	62	59	57	54	55	51	50	52	60
TCC12R12L-06	Sound Power	93	91	90	86	88	83	83	84	92
	Sound Pressure @10m	61	58	57	53	55	50	50	52	60
TCC12R14L-06	Sound Power	93	91	90	86	88	83	83	84	92
	Sound Pressure @10m	60	58	57	53	55	50	50	52	59
TCC12R16L-06	Sound Power	92	90	89	86	88	82	83	84	92
	Sound Pressure @10m	59	57	56	53	55	49	50	51	59

(1) dB(A) is the overall sound level, measured on the A scale.
(2) All sound data measured at nominal conditions: Water in/out 13/7°C at 35°C ambient.
(3) Based on a unit with a 300mm plenum, for other configurations please see Airedale.

Sound Data

TCC - EC Fans

		EC								
		Single Octave Sound Levels (dB)								
		63 Hz	125 Hz	250 Hz	500 Hz	1000 Hz	2000 Hz	4000 Hz	8000	Overall [dB(A)]
TCC12R18L-06	Sound Power	92	91	90	86	88	82	83	84	92
	Sound Pressure @10m	59	57	57	53	55	49	50	51	59
TCC12R20L-06	Sound Power	92	90	89	86	88	82	83	84	92
	Sound Pressure @10m	59	57	56	53	54	49	50	51	59
TCC22R08S-14	Sound Power	91	89	88	84	85	81	84	86	91
	Sound Pressure @10m	59	56	55	51	52	48	52	53	59
TCC22R10S-14	Sound Power	88	87	87	83	83	79	84	86	90
	Sound Pressure @10m	56	54	54	50	51	47	51	53	58
TCC22R12S-14	Sound Power	87	86	86	82	83	79	84	86	90
	Sound Pressure @10m	54	53	53	49	50	46	51	53	57
TCC22R14S-14	Sound Power	86	85	85	81	82	78	84	86	90
	Sound Pressure @10m	53	52	52	49	49	45	51	53	57
TCC22R10L-15	Sound Power	94	91	90	86	88	83	83	84	92
	Sound Pressure @10m	62	59	57	54	55	51	50	52	60
TCC22R12L-15	Sound Power	93	91	89	86	88	83	83	84	92
	Sound Pressure @10m	60	58	57	53	55	50	50	52	59
TCC22R14L-15	Sound Power	93	91	90	86	88	82	83	84	92
	Sound Pressure @10m	60	58	57	53	55	50	50	52	59
TCC22R16L-16	Sound Power	92	90	89	86	88	82	83	84	92
	Sound Pressure @10m	59	57	56	53	55	49	50	51	59
TCC22R18L-16	Sound Power	92	90	89	86	88	82	83	84	92
	Sound Pressure @10m	59	57	56	53	55	49	50	51	59
TCC22R20L-16	Sound Power	91	90	89	85	87	82	83	84	92
	Sound Pressure @10m	58	57	56	52	54	49	50	51	59
TCC23R12S-17	Sound Power	91	89	88	85	85	81	86	88	92
	Sound Pressure @10m	58	56	56	52	53	49	53	55	60
TCC23R14S-17	Sound Power	90	89	88	84	85	81	86	88	92
	Sound Pressure @10m	57	56	55	51	52	48	53	55	59

(1) dB(A) is the overall sound level, measured on the A scale.
(2) All sound data measured at nominal conditions: Water in/out 13/7°C at 35°C ambient.
(3) Based on a unit with a 300mm plenum, for other configurations please see Airedale.

Sound Data

TCC - EC Fans

		EC								
		Single Octave Sound Levels (dB)								
		63 Hz	125 Hz	250 Hz	500 Hz	1000 Hz	2000 Hz	4000 Hz	8000	Overall [dB(A)]
TCC23R16S-17	Sound Power	89	88	88	84	85	81	86	88	92
	Sound Pressure @10m	56	55	55	51	52	48	53	55	59
TCC23R18S-17	Sound Power	88	88	87	84	84	80	86	88	92
	Sound Pressure @10m	55	54	54	51	51	47	53	55	59
TCC23R16L-19	Sound Power	94	91	90	87	89	84	85	86	93
	Sound Pressure @10m	61	58	57	54	56	51	52	53	60
TCC23R18L-19	Sound Power	93	91	90	87	89	83	85	86	93
	Sound Pressure @10m	60	58	57	54	56	50	51	53	60
TCC23R20L-20	Sound Power	92	91	90	87	89	83	85	86	93
	Sound Pressure @10m	59	58	57	53	56	50	51	53	60
TCC23R22L-20	Sound Power	92	91	90	86	89	83	85	86	93
	Sound Pressure @10m	59	57	56	53	55	50	51	53	60
TCC23R24L-20	Sound Power	92	90	90	86	89	83	85	86	93
	Sound Pressure @10m	58	57	56	53	55	50	51	53	60
TCC24R16S-18	Sound Power	92	90	90	86	87	82	87	89	94
	Sound Pressure @10m	59	57	57	53	54	49	54	56	61
TCC24R18S-18	Sound Power	91	89	89	85	86	82	87	89	93
	Sound Pressure @10m	58	56	56	52	53	49	54	56	60
TCC24R20S-18	Sound Power	90	89	89	85	86	82	87	89	93
	Sound Pressure @10m	57	56	56	52	53	49	54	56	60
TCC24R22S-18	Sound Power	89	89	88	85	85	82	87	89	93
	Sound Pressure @10m	56	55	55	51	52	48	54	56	60
TCC24R24S-18	Sound Power	89	88	88	84	85	81	87	89	93
	Sound Pressure @10m	56	55	55	51	52	48	53	55	60
TCC24R20L-21	Sound Power	95	92	91	88	90	85	86	87	95
	Sound Pressure @10m	62	59	58	55	57	52	53	54	61
TCC24R22L-21	Sound Power	94	92	91	88	90	85	86	87	95
	Sound Pressure @10m	61	59	58	55	57	51	53	54	61
TCC24R24L-21	Sound Power	94	92	91	88	90	84	86	87	94
	Sound Pressure @10m	60	58	58	54	57	51	52	54	61

(1) dB(A) is the overall sound level, measured on the A scale.
(2) All sound data measured at nominal conditions: Water in/out 13/7°C at 35°C ambient.
(3) Based on a unit with a 300mm plenum, for other configurations please see Airedale.

Sound Data

TCC - EC Fans

		EC								
		Single Octave Sound Levels (dB)								
		63 Hz	125 Hz	250 Hz	500 Hz	1000 Hz	2000 Hz	4000 Hz	8000	Overall [dB(A)]
TCC11X04S-01	Sound Power	83	82	79	77	77	75	81	83	86
	Sound Pressure @10m	50	49	47	45	45	42	49	51	54
TCC11X06S-01	Sound Power	84	83	81	78	78	75	81	83	87
	Sound Pressure @10m	52	51	48	46	46	43	49	51	54
TCC11X08S-01	Sound Power	82	81	79	77	77	75	81	83	86
	Sound Pressure @10m	49	49	47	44	44	42	48	50	54
TCC11X06L-02	Sound Power	84	83	80	79	82	77	80	81	87
	Sound Pressure @10m	52	51	48	47	50	45	47	49	55
TCC11X08L-03	Sound Power	86	85	81	80	82	77	80	81	87
	Sound Pressure @10m	53	52	49	47	50	45	47	49	55
TCC11X10L-03	Sound Power	86	86	82	80	82	77	80	81	87
	Sound Pressure @10m	54	53	50	48	50	45	47	49	55
TCC12X08S-04	Sound Power	86	85	82	80	80	78	84	86	89
	Sound Pressure @10m	53	52	50	47	48	45	51	53	57
TCC12X10S-04	Sound Power	87	86	83	80	81	78	84	86	90
	Sound Pressure @10m	54	53	50	48	48	45	51	53	57
TCC12X12S-04	Sound Power	87	86	84	81	81	78	84	86	90
	Sound Pressure @10m	55	54	51	48	48	45	51	53	57
TCC12X14S-04	Sound Power	88	87	84	81	81	78	84	86	90
	Sound Pressure @10m	55	54	51	48	48	45	51	53	57
TCC12X10L-05	Sound Power	86	86	82	82	85	80	83	84	90
	Sound Pressure @10m	54	53	50	49	52	47	50	52	57
TCC12X12L-06	Sound Power	87	86	83	82	85	80	83	84	90
	Sound Pressure @10m	55	54	50	49	52	47	50	52	57
TCC12X14L-06	Sound Power	88	87	84	82	85	80	83	84	90
	Sound Pressure @10m	55	54	51	50	52	47	50	51	57
TCC12X16L-06	Sound Power	89	88	84	83	85	80	83	84	90
	Sound Pressure @10m	56	55	51	50	52	47	50	51	57
TCC12X18L-06	Sound Power	89	88	85	83	85	80	83	84	90
	Sound Pressure @10m	56	55	52	50	52	47	50	51	57
TCC12X20L-06	Sound Power	89	89	85	83	85	80	83	84	90
	Sound Pressure @10m	56	55	52	50	52	47	49	51	57

(1) dB(A) is the overall sound level, measured on the A scale.
(2) All sound data measured at nominal conditions: Water in/out 13/7°C at 35°C ambient.
(3) Based on a unit with a 300mm plenum, for other configurations please see Airedale.

Sound Data

TCC - EC Fans

		EC								
		Single Octave Sound Levels (dB)								
		63 Hz	125 Hz	250 Hz	500 Hz	1000 Hz	2000 Hz	4000 Hz	8000	Overall [dB(A)]
TCC22X08S-14	Sound Power	86	85	82	80	80	78	84	86	89
	Sound Pressure @10m	53	52	50	47	48	45	51	53	57
TCC22X10S-14	Sound Power	87	86	83	80	81	78	84	86	90
	Sound Pressure @10m	54	53	50	48	48	45	51	53	57
TCC22X12S-14	Sound Power	87	86	84	81	81	78	84	86	90
	Sound Pressure @10m	55	54	51	48	48	45	51	53	57
TCC22X14S-14	Sound Power	88	87	84	81	81	78	84	86	90
	Sound Pressure @10m	55	54	51	48	48	45	51	53	57
TCC22X10L-15	Sound Power	86	86	82	82	85	80	83	84	90
	Sound Pressure @10m	54	53	50	49	52	47	50	52	57
TCC22X12L-15	Sound Power	87	86	83	82	85	80	83	84	90
	Sound Pressure @10m	55	54	50	49	52	47	50	52	57
TCC22X14L-15	Sound Power	88	87	84	82	85	80	83	84	90
	Sound Pressure @10m	55	54	51	50	52	47	50	51	57
TCC22X16L-16	Sound Power	89	88	84	83	85	80	83	84	90
	Sound Pressure @10m	56	55	51	50	52	47	50	51	57
TCC22X18L-16	Sound Power	89	88	85	83	85	80	83	84	90
	Sound Pressure @10m	56	55	52	50	52	47	50	51	57
TCC22X20L-16	Sound Power	89	89	85	83	85	80	83	84	90
	Sound Pressure @10m	56	55	52	50	52	47	49	51	57
TCC23X12S-17	Sound Power	87	86	84	82	82	79	86	88	91
	Sound Pressure @10m	55	54	51	49	49	47	53	55	58
TCC23X14S-17	Sound Power	88	87	84	82	82	79	86	88	91
	Sound Pressure @10m	55	54	52	49	49	47	53	55	58
TCC23X16S-17	Sound Power	89	88	85	82	82	80	86	88	91
	Sound Pressure @10m	56	55	52	49	49	47	53	55	58
TCC23X18S-17	Sound Power	89	88	85	83	83	80	86	88	91
	Sound Pressure @10m	56	55	52	50	50	47	53	55	58

(1) dB(A) is the overall sound level, measured on the A scale.
(2) All sound data measured at nominal conditions: Water in/out 13/7°C at 35°C ambient.
(3) Based on a unit with a 300mm plenum, for other configurations please see Airedale.

Sound Data

TCC - EC Fans

		EC								
		Single Octave Sound Levels (dB)								
		63 Hz	125 Hz	250 Hz	500 Hz	1000 Hz	2000 Hz	4000 Hz	8000	Overall [dB(A)]
TCC23X16L-19	Sound Power	89	88	84	84	87	82	84	86	92
	Sound Pressure @10m	56	55	51	51	54	49	51	53	59
TCC23X18L-19	Sound Power	89	88	85	84	87	82	84	86	92
	Sound Pressure @10m	56	55	52	51	54	49	51	53	59
TCC23X20L-20	Sound Power	89	89	85	84	87	82	84	86	92
	Sound Pressure @10m	56	55	52	51	54	49	51	53	59
TCC23X22L-20	Sound Power	90	89	86	84	87	82	84	86	92
	Sound Pressure @10m	57	56	52	51	54	48	51	53	59
TCC23X24L-20	Sound Power	90	89	86	85	87	82	84	86	92
	Sound Pressure @10m	57	56	53	51	54	48	51	53	59
TCC24X16S-18	Sound Power	89	88	85	83	83	81	87	89	92
	Sound Pressure @10m	56	55	52	50	50	48	54	56	59
TCC24X18S-18	Sound Power	89	88	86	83	83	81	87	89	92
	Sound Pressure @10m	56	55	53	50	50	48	54	56	59
TCC24X20S-18	Sound Power	90	89	86	83	84	81	87	89	93
	Sound Pressure @10m	56	55	53	50	50	48	54	56	59
TCC24X22S-18	Sound Power	90	89	86	84	84	81	87	89	93
	Sound Pressure @10m	57	56	53	50	50	48	54	56	59
TCC24X24S-18	Sound Power	90	89	87	84	84	81	87	89	93
	Sound Pressure @10m	57	56	53	50	50	47	53	55	59
TCC24X20L-21	Sound Power	89	89	85	85	88	83	86	87	93
	Sound Pressure @10m	56	55	52	52	55	50	52	54	60
TCC24X22L-21	Sound Power	90	89	86	85	88	83	86	87	93
	Sound Pressure @10m	57	56	52	52	55	50	52	54	60
TCC24X24L-21	Sound Power	90	89	86	85	88	83	86	87	93
	Sound Pressure @10m	57	56	53	52	55	50	52	54	60

(1) dB(A) is the overall sound level, measured on the A scale.
(2) All sound data measured at nominal conditions: Water in/out 13/7°C at 35°C ambient.
(3) Based on a unit with a 300mm plenum, for other configurations please see Airedale.

Technical Data - TCF (R) TCF11R06S-07, TCF11R08S-07, TCF11R06L-11

Mechanical

			87	88	89
Mechanical Data	Notes	Units	TCF11R06S-07	TCF11R08S-07	TCF11R06L-11
Cooling Duty - AC Fans	(1)	kW	275	300	390
Nom Input -Cooling Only		kW	78	85	136
EER	(2)		3.55	3.55	2.87
ESEER	(3)		4.23	4.28	3.99
Nominal Output - Free Cooling	(4)	kW	253	312	282
Ambient when Free Cooling = 100% Nominal DX	(5)	°C	0.8	2.5	-3.3
Capacity Steps	(6)	%	30-100%	30-100%	30-100%
Dimensions (H x W x L)	(9)	mm	2800 x 2200 x 3758	2800 x 2200 x 4890	2800 x 2200 x 3758
Machine Weight	(7)	kg	3965	4750	4410
Operating Weight	(7)	kg	4515	5425	5055
Construction Material			Base: Plain Galvanised Steel, Panels: Galvanised Sheet Steel, Epoxy Baked Powder Paint, Light Grey (RAL 7035)		
Evaporator - Type			Flooded - Shell and Tube Evaporator		
Insulation			Class O, UV stable Insulation		
Total Max. Water Flow		l/s	25.0	25.0	30.5
Total Min. Water Flow		l/s	8.3	8.3	10.0
Condenser - Type			Epoxy Coated Aluminium Microchannel & Aluminium Fins		
Face Area Total		m²	14.2	18.9	14.2
Maximum Airflow - EC Fans		m³/s	34.4	45.9	34.4
Condenser Fan & Motor			Sickle Bladed Axial Fan		
Quantity			6	8	6
Diameter		mm	800	800	800
Maximum Speed - EC Fans		rpm	1025	1025	1025
Compressor - Type			Turbocor - Oil Free Compressor		
Quantity			1	1	1
Capacity Control			Variable Frequency Drive (VFD) for Linear Capacity Modulation		
Refrigeration			Single Circuit	Single Circuit	Single Circuit
Refrigerant Pre-charged/ GWP			R134a / 1430		
Charge (Total) CCT1 + CCT2		kg	135	150	195
GWP Tonnes Equivalent CO_2			193	215	279
Refrigeration Control			Electronic Expansion Valve (EEV)		
Water System			Grooved Type Coupling and Pipe Assembly		
Water Inlet / Outlet			DN100	DN100	DN125
Water Drain / Bleed - Evap		inch	1/2	1/2	1/2
Water Volume		l	424	514	513
Minimum System Water Volume	(8)	l	2137	2226	3082
Max System Operating Pressure		Barg	10	10	10
Flow Rate		l/s	12.2	12.6	16.4
Pressure Drop		kPa	94.6	91.7	106.8

(1) Based on FC units performance at 16/10°C return/supply temperatures, 35°C ambient, 20% ethylene glycol. All performance data is supplied in accordance with BS EN 14511-1:2013
(2) EER = DX cooling output / (compressor input power + fan input power)
(3) ESEER based upon unit operating at 12 / 7 °C return / supply temperature, 35°C ambient.
(4) Nominal Free Cooling output at 16/10°C return/supply temperatures, 2°C ambient, 20% ethylene glycol.
(5) Ambient temperature that maximum nominal DX duty can be achieved using Free Cooling only.
(6) This is a nominal figure based on full compressor duty, actual turndown depends on both condensing and evaporating temperatures.
(7) Based on standard unit without options, machine weight includes refrigerant charge, operating weight includes refrigerant charge and water volume. For unit weights with waterside options fitted please contact Airedale.
(8) For minimum system water volume calculation, refer to Design Features & Information - Minimum System Water Volume Calculations.
(9) Height based on standard fan, for optional fan dimensions please contact Airedale

Technical Data

TCF11R06S-07, TCF11R08S-07, TCF11R06L-11

Electrical

			87	88	89
ELECTRICAL DATA			TCF11R06S-07	TCF11R08S-07	TCF11R06L-11
Unit Data					
Full Load Amps	(1)	A	168	176	233
Maximum Start Amps		A	2	2	2
Mains Supply		VAC	400V (±10%) 3PH 50Hz		
Recommended Mains Fuse Size		A	200	200	250
Max Mains Incoming Cable Size (Direct to 3 Phase Mains Isolator)		mm²	2x 300mm² (Torque >20Nm)		
Independent Permanent Supply Recommended Fuse Size		A	25	25	25
Independent Permanent Supply		VAC	230V 1PH 50Hz (±10%)		
Max Permanent Incoming Cable Size (Direct to Control Panel Isolator)		mm²	6mm² / 8 AWG		
Control Circuit		VAC	24 VAC & 230VAC (±10%)		
Evaporator					
Immersion Heater Rating		W	500 (2x 250)	500 (2x 250)	500 (2x 250)
External Trace Heating					
Available (fitted by others)		W	500	500	500
Condenser Fan - Per Fan (EC)					
Quantity			6	8	6
Full Load Amps		A	3.9	3.9	3.9
Locked Rotor Amps		A	N/A	N/A	N/A
Motor Rating		kW	2.56	2.56	2.56
Compressor - Per Compressor					
Nominal Run Amps		A	145	145	210
Quantity			1	1	1
Motor Rating		kW	87	87	129
Start Amps		A	2	2	2
Type Of Start			Electronic Soft Start		

(1) Based at full load Conditions and EC Fans
Pump electrical data is avaliable from Airedale upon request.

Technical Data

TCF11R08L-08, TCF11R10L-10, TCF12R08S-09

Mechanical

			90	91	92
Mechanical Data	Notes	Units	TCF11R08L-08	TCF11R10L-10	TCF12R08S-09
Cooling Duty - AC Fans	(1)	kW	425	430	470
Nom Input -Cooling Only		kW	147	133	138
EER	(2)		2.89	3.23	3.42
ESEER	(3)		4.06	4.19	4.49
Nominal Output - Free Cooling	(4)	kW	355	412	366
Ambient when Free Cooling = 100% Nominal DX	(5)	°C	-0.8	1.4	-2.0
Capacity Steps	(6)	%	30-100%	30-100%	15-100%
Dimensions (H x W x L)	(9)	mm	2800 x 2200 x 4890	2800 x 2200 x 6022	2800 x 2200 x 4890
Machine Weight	(7)	kg	5070	6120	5495
Operating Weight	(7)	kg	5755	6900	5935
Construction Material			Base: Plain Galvanised Steel, Panels: Galvanised Sheet Steel, Epoxy Baked Powder Paint, Light Grey (RAL 7035)		
Evaporator - Type			Flooded - Shell and Tube Evaporator		
Insulation			Class O, UV stable Insulation		
Total Max. Water Flow		l/s	43.6	37.5	50.0
Total Min. Water Flow		l/s	14.4	12.5	16.7
Condenser - Type			Epoxy Coated Aluminium Microchannel & Aluminium Fins		
Face Area Total		m²	18.9	23.7	18.9
Maximum Airflow - EC Fans		m³/s	45.9	57.4	45.9
Condenser Fan & Motor			Sickle Bladed Axial Fan		
Quantity			8	10	8
Diameter		mm	800	800	800
Maximum Speed - EC Fans		rpm	1025	1025	1025
Compressor - Type			Turbocor - Oil Free Compressor		
Quantity			1	1	2
Capacity Control			Variable Frequency Drive (VFD) for Linear Capacity Modulation		
Refrigeration			Single Circuit	Single Circuit	Single Circuit
Refrigerant Pre-charged/ GWP			R134a / 1430		
Charge (Total) CCT1 + CCT2		kg	195	305	195
GWP Tonnes Equivalent CO_2			279	436	279
Refrigeration Control			Electronic Expansion Valve (EEV)		
Water System			Grooved Type Coupling and Pipe Assembly		
Water Inlet / Outlet			DN125	DN125	DN125
Water Drain / Bleed - Evap		inch	1/2	1/2	1/2
Water Volume		l	586	673	401
Minimum System Water Volume	(8)	l	3155	3242	2114
Max System Operating Pressure		Barg	10	10	10
Flow Rate		l/s	17.9	18.9	19.8
Pressure Drop		kPa	75.4	89.7	85.4

(1) Based on FC units performance at 16/10°C return/supply temperatures, 35°C ambient, 20% ethylene glycol. All performance data is supplied in accordance with BS EN 14511-1:2013
(2) EER = DX cooling output / (compressor input power + fan input power)
(3) ESEER based upon unit operating at 12 / 7 °C return / supply temperature, 35°C ambient.
(4) Nominal Free Cooling output at 16/10°C return/supply temperatures, 2°C ambient, 20% ethylene glycol.
(5) Ambient temperature that maximum nominal DX duty can be achieved using Free Cooling only.
(6) This is a nominal figure based on full compressor duty, actual turndown depends on both condensing and evaporating temperatures.
(7) Based on standard unit without options, machine weight includes refrigerant charge, operating weight includes refrigerant charge and water volume. For unit weights with waterside options fitted please contact Airedale.
(8) For minimum system water volume calculation, refer to Design Features & Information - Minimum System Water Volume Calculations.
(9) Height based on standard fan, for optional fan dimensions please contact Airedale

Technical Data

TCF11R08L-08, TCF11R10L-10, TCF12R08S-09

Electrical

			90	91	92
ELECTRICAL DATA			TCF11R08L-08	TCF11R10L-10	TCF12R08S-09
Unit Data					
Full Load Amps	(1)	A	241	249	321
Maximum Start Amps		A	2	2	176
Mains Supply		VAC	400V (±10%) 3PH 50Hz		
Recommended Mains Fuse Size		A	315	315	355
Max Mains Incoming Cable Size (Direct to 3 Phase Mains Isolator)		mm²	2x 300mm² (Torque >20Nm)		
Independent Permanent Supply Recommended Fuse Size		A	25	25	25
Independent Permanent Supply		VAC	230V 1PH 50Hz (±10%)		
Max Permanent Incoming Cable Size (Direct to Control Panel Isolator)		mm²	6mm² / 8 AWG		
Control Circuit		VAC	24 VAC & 230VAC (±10%)		
Evaporator					
Immersion Heater Rating		W	500 (2x 250)	500 (2x 250)	500 (2x 250)
External Trace Heating					
Available (fitted by others)		W	500	500	500
Condenser Fan - Per Fan (EC)					
Quantity			8	10	8
Full Load Amps		A	3.9	3.9	3.9
Locked Rotor Amps		A	N/A	N/A	N/A
Motor Rating		kW	2.56	2.56	2.56
Compressor - Per Compressor					
Nominal Run Amps		A	210	210	145
Quantity			1	1	2
Motor Rating		kW	129	129	87
Start Amps		A	2	2	2
Type Of Start			Electronic Soft Start		

(1) Based at full load Conditions and EC Fans
Pump electrical data is avaliable from Airedale upon request.

Technical Data

TCF12R10S-05, TCF12R12S-05, TCF12R14S-05

Mechanical

			93	94	95
Mechanical Data	Notes	Units	TCF12R10S-05	TCF12R12S-05	TCF12R14S-05
Cooling Duty - AC Fans	(1)	kW	500	530	560
Nom Input -Cooling Only		kW	135	141	148
EER	(2)		3.70	3.77	3.79
ESEER	(3)		4.57	4.67	4.69
Nominal Output - Free Cooling	(4)	kW	435	499	561
Ambient when Free Cooling = 100% Nominal DX	(5)	°C	-0.1	1.1	2.0
Capacity Steps	(6)	%	15-100%	15-100%	15-100%
Dimensions (H x W x L)	(9)	mm	2800 x 2200 x 6022	2800 x 2200 x 7154	2800 x 2200 x 8286
Machine Weight	(7)	kg	6490	7385	8315
Operating Weight	(7)	kg	7320	8335	9335
Construction Material			Base: Plain Galvanised Steel, Panels: Galvanised Sheet Steel, Epoxy Baked Powder Paint, Light Grey (RAL 7035)		
Evaporator - Type			Flooded - Shell and Tube Evaporator		
Insulation			Class O, UV stable Insulation		
Total Max. Water Flow		l/s	50.0	50.0	50.0
Total Min. Water Flow		l/s	16.7	16.7	16.7
Condenser - Type			Epoxy Coated Aluminium Microchannel & Aluminium Fins		
Face Area Total		m²	23.7	28.4	33.2
Maximum Airflow - EC Fans		m³/s	57.4	68.9	80.4
Condenser Fan & Motor			Sickle Bladed Axial Fan		
Quantity			10	12	14
Diameter		mm	800	800	800
Maximum Speed - EC Fans		rpm	1025	1025	1025
Compressor - Type			Turbocor - Oil Free Compressor		
Quantity			2	2	2
Capacity Control			Variable Frequency Drive (VFD) for Linear Capacity Modulation		
Refrigeration			Single Circuit	Single Circuit	Single Circuit
Refrigerant Pre-charged/ GWP			R134a / 1430		
Charge (Total) CCT1 + CCT2		kg	275	295	310
GWP Tonnes Equivalent CO_2			393	422	443
Refrigeration Control			Electronic Expansion Valve (EEV)		
Water System			Grooved Type Coupling and Pipe Assembly		
Water Inlet / Outlet			DN125	DN125	DN125
Water Drain / Bleed - Evap		inch	1/2	1/2	1/2
Water Volume		l	700	819	943
Minimum System Water Volume	(8)	l	2412	2532	2655
Max System Operating Pressure		Barg	10	10	10
Flow Rate		l/s	21.0	22.3	23.6
Pressure Drop		kPa	92.3	95.6	101.5

(1) Based on FC units performance at 16/10°C return/supply temperatures, 35°C ambient, 20% ethylene glycol. All performance data is supplied in accordance with BS EN 14511-1:2013
(2) EER = DX cooling output / (compressor input power + fan input power)
(3) ESEER based upon unit operating at 12 / 7 °C return / supply temperature, 35°C ambient.
(4) Nominal Free Cooling output at 16/10°C return/supply temperatures, 2°C ambient, 20% ethylene glycol.
(5) Ambient temperature that maximum nominal DX duty can be achieved using Free Cooling only.
(6) This is a nominal figure based on full compressor duty, actual turndown depends on both condensing and evaporating temperatures.
(7) Based on standard unit without options, machine weight includes refrigerant charge, operating weight includes refrigerant charge and water volume. For unit weights with waterside options fitted please contact Airedale.
(8) For minimum system water volume calculation, refer to Design Features & Information - Minimum System Water Volume Calculations.
(9) Height based on standard fan, for optional fan dimensions please contact Airedale

Technical Data

TCF12R10S-05, TCF12R12S-05, TCF12R14S-05

Electrical

			93	94	95
ELECTRICAL DATA			TCF12R10S-05	TCF12R12S-05	TCF12R14S-05
Unit Data					
Full Load Amps	(1)	A	329	337	345
Maximum Start Amps		A	184	192	200
Mains Supply		VAC	400V (±10%) 3PH 50Hz		
Recommended Mains Fuse Size		A	355	355	355
Max Mains Incoming Cable Size (Direct to 3 Phase Mains Isolator)		mm²	2x 300mm² (Torque >20Nm)		
Independent Permanent Supply Recommended Fuse Size		A	25	25	25
Independent Permanent Supply		VAC	230V 1PH 50Hz (±10%)		
Max Permanent Incoming Cable Size (Direct to Control Panel Isolator)		mm²	6mm² / 8 AWG		
Control Circuit		VAC	24 VAC & 230VAC (±10%)		
Evaporator					
Immersion Heater Rating		W	500 (2x 250)	500 (2x 250)	500 (2x 250)
External Trace Heating					
Available (fitted by others)		W	500	500	500
Condenser Fan - Per Fan (EC)					
Quantity			10	12	14
Full Load Amps		A	3.9	3.9	3.9
Locked Rotor Amps		A	N/A	N/A	N/A
Motor Rating		kW	2.56	2.56	2.56
Compressor - Per Compressor					
Nominal Run Amps		A	145	145	145
Quantity			2	2	2
Motor Rating		kW	87	87	87
Start Amps		A	2	2	2
Type Of Start			Electronic Soft Start		

(1) Based at full load Conditions and EC Fans
Pump electrical data is avaliable from Airedale upon request.

Technical Data

TCF12R12L-12, TCF12R14L-12, TCF12R16L-12

Mechanical

			96	97	98
Mechanical Data	Notes	Units	TCF12R12L-12	TCF12R14L-12	TCF12R16L-12
Cooling Duty - AC Fans	(1)	kW	670	750	800
Nom Input -Cooling Only		kW	198	218	230
EER	(2)		3.39	3.45	3.48
ESEER	(3)		4.29	4.32	4.40
Nominal Output - Free Cooling	(4)	kW	541	623	696
Ambient when Free Cooling = 100% Nominal DX	(5)	°C	-1.3	-0.9	-0.1
Capacity Steps	(6)	%	15-100%	15-100%	15-100%
Dimensions (H x W x L)	(9)	mm	2800 x 2200 x 7154	2800 x 2200 x 8286	2800 x 2200 x 9418
Machine Weight	(7)	kg	8140	9065	9730
Operating Weight	(7)	kg	9270	10295	11295
Construction Material			Base: Plain Galvanised Steel, Panels: Galvanised Sheet Steel, Epoxy Baked Powder Paint, Light Grey (RAL 7035)		
Evaporator - Type			Flooded - Shell and Tube Evaporator		
Insulation			Class O, UV stable Insulation		
Total Max. Water Flow		l/s	70.3	70.3	70.3
Total Min. Water Flow		l/s	23.3	23.3	23.3
Condenser - Type			Epoxy Coated Aluminium Microchannel & Aluminium Fins		
Face Area Total		m²	28.4	33.2	37.9
Maximum Airflow - EC Fans		m³/s	68.9	80.4	91.8
Condenser Fan & Motor			Sickle Bladed Axial Fan		
Quantity			12	14	16
Diameter		mm	800	800	800
Maximum Speed - EC Fans		rpm	1025	1025	1025
Compressor - Type			Turbocor - Oil Free Compressor		
Quantity			2	2	2
Capacity Control			Variable Frequency Drive (VFD) for Linear Capacity Modulation		
Refrigeration			Single Circuit	Single Circuit	Single Circuit
Refrigerant Pre-charged/ GWP			R134a / 1430		
Charge (Total) CCT1 + CCT2		kg	405	420	440
GWP Tonnes Equivalent CO_2			579	601	629
Refrigeration Control			Electronic Expansion Valve (EEV)		
Water System			Grooved Type Coupling and Pipe Assembly		
Water Inlet / Outlet			DN150	DN150	DN150
Water Drain / Bleed - Evap		inch	1/2	1/2	1/2
Water Volume		l	991	1144	1251
Minimum System Water Volume	(8)	l	3560	3713	3820
Max System Operating Pressure		Barg	10	10	10
Flow Rate		l/s	28.2	31.5	33.6
Pressure Drop		kPa	86.4	97.7	103.8

(1) Based on FC units performance at 16/10°C return/supply temperatures, 35°C ambient, 20% ethylene glycol. All performance data is supplied in accordance with BS EN 14511-1:2013
(2) EER = DX cooling output / (compressor input power + fan input power)
(3) ESEER based upon unit operating at 12 / 7 °C return / supply temperature, 35°C ambient.
(4) Nominal Free Cooling output at 16/10°C return/supply temperatures, 2°C ambient, 20% ethylene glycol.
(5) Ambient temperature that maximum nominal DX duty can be achieved using Free Cooling only.
(6) This is a nominal figure based on full compressor duty, actual turndown depends on both condensing and evaporating temperatures.
(7) Based on standard unit without options, machine weight includes refrigerant charge, operating weight includes refrigerant charge and water volume. For unit weights with waterside options fitted please contact Airedale.
(8) For minimum system water volume calculation, refer to Design Features & Information - Minimum System Water Volume Calculations.
(9) Height based on standard fan, for optional fan dimensions please contact Airedale

Technical Data

TCF12R12L-12, TCF12R14L-12, TCF12R16L-12

Electrical

			96	97	98
ELECTRICAL DATA			TCF12R12L-12	TCF12R14L-12	TCF12R16L-12
Unit Data					
Full Load Amps	(1)	A	467	475	482
Maximum Start Amps		A	257	265	272
Mains Supply		VAC	400V (±10%) 3PH 50Hz		
Recommended Mains Fuse Size		A	500	500	500
Max Mains Incoming Cable Size (Direct to 3 Phase Mains Isolator)		mm²	2x 300mm² (Torque >20Nm)		
Independent Permanent Supply Recommended Fuse Size		A	25	25	25
Independent Permanent Supply			230V 1PH 50Hz (±10%)		
Max Permanent Incoming Cable Size (Direct to Control Panel Isolator)		mm²	6mm² / 8 AWG		
Control Circuit		VAC	24 VAC & 230VAC (±10%)		
Evaporator					
Immersion Heater Rating		W	500 (2x 250)	500 (2x 250)	500 (2x 250)
External Trace Heating					
Available (fitted by others)		W	500	500	500
Condenser Fan - Per Fan (EC)					
Quantity			12	14	16
Full Load Amps		A	3.9	3.9	3.9
Locked Rotor Amps		A	N/A	N/A	N/A
Motor Rating		kW	2.56	2.56	2.56
Compressor - Per Compressor					
Nominal Run Amps		A	210	210	210
Quantity			2	2	2
Motor Rating		kW	129	129	129
Start Amps		A	2	2	2
Type Of Start			Electronic Soft Start		

(1) Based at full load Conditions and EC Fans
Pump electrical data is avaliable from Airedale upon request.

Technical Data

TCF12R18L-13, TCF12R20L-13

Mechanical

			99	100
Mechanical Data	Notes	Units	TCF12R18L-13	TCF12R20L-13
Cooling Duty - AC Fans	(1)	kW	850	900
Nom Input -Cooling Only		kW	247	264
EER	(2)		3.44	3.41
ESEER	(3)		4.44	4.47
Nominal Output - Free Cooling	(4)	kW	768	838
Ambient when Free Cooling = 100% Nominal DX	(5)	°C	0.5	1.0
Capacity Steps	(6)	%	15-100%	15-100%
Dimensions (H x W x L)	(9)	mm	2800 x 2200 x 10550	2800 x 2200 x 11682
Machine Weight	(7)	kg	10735	11620
Operating Weight	(7)	kg	12195	13200
Construction Material			Base: Plain Galvanised Steel, Panels: Galvanised Sheet Steel, Epoxy Baked Powder Paint, Light Grey (RAL 7035)	
Evaporator - Type			Flooded - Shell and Tube Evaporator	
Insulation			Class O, UV stable Insulation	
Total Max. Water Flow		l/s	74.2	74.2
Total Min. Water Flow		l/s	24.7	24.7
Condenser - Type			Epoxy Coated Aluminium Microchannel & Aluminium Fins	
Face Area Total		m²	42.6	47.4
Maximum Airflow - EC Fans		m³/s	103.3	114.8
Condenser Fan & Motor			Sickle Bladed Axial Fan	
Quantity			18	20
Diameter		mm	800	800
Maximum Speed - EC Fans		rpm	1025	1025
Compressor - Type			Turbocor - Oil Free Compressor	
Quantity			2	2
Capacity Control			Variable Frequency Drive (VFD) for Linear Capacity Modulation	
Refrigeration			Single Circuit	Single Circuit
Refrigerant Pre-charged/ GWP			R134a / 1430	
Charge (Total) CCT1 + CCT2		kg	430	445
GWP Tonnes Equivalent CO_2			615	636
Refrigeration Control			Electronic Expansion Valve (EEV)	
Water System			Grooved Type Coupling and Pipe Assembly	
Water Inlet / Outlet			DN150	DN150
Water Drain / Bleed - Evap		inch	1/2	1/2
Water Volume		l	1365	1478
Minimum System Water Volume	(8)	l	3934	4047
Max System Operating Pressure		Barg	10	10
Flow Rate		l/s	35.7	37.8
Pressure Drop		kPa	108.3	116.8

(1) Based on FC units performance at 16/10°C return/supply temperatures, 35°C ambient, 20% ethylene glycol. All performance data is supplied in accordance with BS EN 14511-1:2013
(2) EER = DX cooling output / (compressor input power + fan input power)
(3) ESEER based upon unit operating at 12 / 7 °C return / supply temperature, 35°C ambient.
(4) Nominal Free Cooling output at 16/10°C return/supply temperatures, 2°C ambient, 20% ethylene glycol.
(5) Ambient temperature that maximum nominal DX duty can be achieved using Free Cooling only.
(6) This is a nominal figure based on full compressor duty, actual turndown depends on both condensing and evaporating temperatures.
(7) Based on standard unit without options, machine weight includes refrigerant charge, operating weight includes refrigerant charge and water volume. For unit weights with waterside options fitted please contact Airedale.
(8) For minimum system water volume calculation, refer to Design Features & Information - Minimum System Water Volume Calculations.
(9) Height based on standard fan, for optional fan dimensions please contact Airedale

Technical Data

TCF12R18L-13, TCF12R20L-13

Electrical

			99	100
ELECTRICAL DATA			TCF12R18L-13	TCF12R20L-13
Unit Data				
Full Load Amps	(1)	A	490	498
Maximum Start Amps		A	280	288
Mains Supply		VAC	400V (±10%) 3PH 50Hz	
Recommended Mains Fuse Size		A	560	560
Max Mains Incoming Cable Size (Direct to 3 Phase Mains Isolator)		mm²	2x 300mm² (Torque >20Nm)	
Independent Permanent Supply Recommended Fuse Size		A	25	25
Independent Permanent Supply				
Max Permanent Incoming Cable Size (Direct to Control Panel Isolator)		mm²	6mm² / 8 AWG	
Control Circuit		VAC	24 VAC & 230VAC (±10%)	
Evaporator				
Immersion Heater Rating		W	500 (2x 250)	500 (2x 250)
External Trace Heating				
Available (fitted by others)		W	500	500
Condenser Fan - Per Fan (EC)				
Quantity			18	20
Full Load Amps		A	3.9	3.9
Locked Rotor Amps		A	N/A	N/A
Motor Rating		kW	2.56	2.56
Compressor - Per Compressor				
Nominal Run Amps		A	210	210
Quantity			2	2
Motor Rating		kW	129	129
Start Amps		A	2	2
Type Of Start			Electronic Soft Start	

(1) Based at full load Conditions and EC Fans
Pump electrical data is avaliable from Airedale upon request.

Technical Data

TCF22R10S-22, TCF22R12S-22, TCF22R14S-22

Mechanical

			101	102	103
Mechanical Data	Notes	Units	TCF22R10S-22	TCF22R12S-22	TCF22R14S-22
Cooling Duty - AC Fans	(1)	kW	490	530	560
Nom Input -Cooling Only		kW	132	140	147
EER	(2)		3.72	3.78	3.81
ESEER	(3)		4.44	4.57	4.60
Nominal Output - Free Cooling	(4)	kW	432	499	561
Ambient when Free Cooling = 100% Nominal DX	(5)	°C	0.1	1.1	2.0
Capacity Steps	(6)	%	15-100%	15-100%	15-100%
Dimensions (H x W x L)	(9)	mm	2800 x 2200 x 6022	2800 x 2200 x 7154	2800 x 2200 x 8286
Machine Weight	(7)	kg	6690	7500	8390
Operating Weight	(7)	kg	7330	8230	9270
Construction Material			Base: Plain Galvanised Steel, Panels: Galvanised Sheet Steel, Epoxy Baked Powder Paint, Light Grey (RAL 7035)		
Evaporator - Type			Flooded - Shell and Tube Evaporator		
Insulation			Class O, UV stable Insulation		
Total Max. Water Flow		l/s	49.9	49.9	49.9
Total Min. Water Flow		l/s	16.7	16.7	16.7
Condenser - Type			Epoxy Coated Aluminium Microchannel & Aluminium Fins		
Face Area Total		m²	23.7	28.4	33.2
Maximum Airflow - EC Fans		m³/s	57.4	68.9	80.4
Condenser Fan & Motor			Sickle Bladed Axial Fan		
Quantity			10	12	14
Diameter		mm	800	800	800
Maximum Speed - EC Fans		rpm	1025	1025	1025
Compressor - Type			Turbocor - Oil Free Compressor		
Quantity			2	2	2
Capacity Control			Variable Frequency Drive (VFD) for Linear Capacity Modulation		
Refrigeration			Dual Circuit	Dual Circuit	Dual Circuit
Refrigerant Pre-charged/ GWP			R134a / 1430		
Charge (Total) CCT1 + CCT2		kg	150 + 145	160 + 155	165 + 160
GWP Tonnes Equivalent CO_2			214.5 + 207.35	228.8 + 221.65	235.95 + 228.8
Refrigeration Control			Electronic Expansion Valve (EEV)		
Water System			Grooved Type Coupling and Pipe Assembly		
Water Inlet / Outlet			DN125	DN125	DN125
Water Drain / Bleed - Evap		inch	1/2	1/2	1/2
Water Volume		l	735	830	975
Minimum System Water Volume	(8)	l	2448	2543	2687
Max System Operating Pressure		Barg	10	10	10
Flow Rate		l/s	21.0	22.3	23.6
Pressure Drop		kPa	90.6	94.3	100.3

(1) Based on FC units performance at 16/10°C return/supply temperatures, 35°C ambient, 20% ethylene glycol. All performance data is supplied in accordance with BS EN 14511-1:2013
(2) EER = DX cooling output / (compressor input power + fan input power)
(3) ESEER based upon unit operating at 12 / 7 °C return / supply temperature, 35°C ambient.
(4) Nominal Free Cooling output at 16/10°C return/supply temperatures, 2°C ambient, 20% ethylene glycol.
(5) Ambient temperature that maximum nominal DX duty can be achieved using Free Cooling only.
(6) This is a nominal figure based on full compressor duty, actual turndown depends on both condensing and evaporating temperatures.
(7) Based on standard unit without options, machine weight includes refrigerant charge, operating weight includes refrigerant charge and water volume. For unit weights with waterside options fitted please contact Airedale.
(8) For minimum system water volume calculation, refer to Design Features & Information - Minimum System Water Volume Calculations.
(9) Height based on standard fan, for optional fan dimensions please contact Airedale

Technical Data

TCF22R10S-22, TCF22R12S-22, TCF22R14S-22

Electrical

			101	102	103
ELECTRICAL DATA			TCF22R10S-22	TCF22R12S-22	TCF22R14S-22
Unit Data					
Full Load Amps	(1)	A	329	337	345
Maximum Start Amps		A	184	192	200
Mains Supply		VAC	400V (±10%) 3PH 50Hz		
Recommended Mains Fuse Size		A	355	355	355
Max Mains Incoming Cable Size (Direct to 3 Phase Mains Isolator)		mm²	2x 300mm² (Torque >20Nm)		
Independent Permanent Supply Recommended Fuse Size		A	25	25	25
Independent Permanent Supply			230V 1PH 50Hz (±10%)		
Max Permanent Incoming Cable Size (Direct to Control Panel Isolator)		mm²	6mm² / 8 AWG		
Control Circuit		VAC	24 VAC & 230VAC (±10%)		
Evaporator					
Immersion Heater Rating		W	340 (2 x 170)	340 (2 x 170)	340 (2 x 170)
External Trace Heating					
Available (fitted by others)		W	500	500	500
Condenser Fan - Per Fan (EC)					
Quantity			10	12	14
Full Load Amps		A	3.9	3.9	3.9
Locked Rotor Amps		A	N/A	N/A	N/A
Motor Rating		kW	2.56	2.56	2.56
Compressor - Per Compressor					
Nominal Run Amps		A	145	145	145
Quantity			2	2	2
Motor Rating		kW	87	87	87
Start Amps		A	2	2	2
Type Of Start			Electronic Soft Start		

(1) Based at full load Conditions and EC Fans
Pump electrical data is avaliable from Airedale upon request.

Technical Data

TCF22R12L-23, TCF22R14L-23, TCF22R16L-23

Mechanical

			104	105	106
Mechanical Data	Notes	Units	TCF22R12L-23	TCF22R14L-23	TCF22R16L-23
Cooling Duty - AC Fans	(1)	kW	650	720	765
Nom Input -Cooling Only		kW	187	202	211
EER	(2)		3.47	3.56	3.63
ESEER	(3)		4.15	4.25	4.32
Nominal Output - Free Cooling	(4)	kW	536	615	685
Ambient when Free Cooling = 100% Nominal DX	(5)	°C	-1.0	-0.4	0.4
Capacity Steps	(6)	%	15-100%	15-100%	15-100%
Dimensions (H x W x L)	(9)	mm	2800 x 2200 x 7154	2800 x 2200 x 8286	2800 x 2200 x 9418
Machine Weight	(7)	kg	8400	9360	10270
Operating Weight	(7)	kg	9310	10450	11440
Construction Material			Base: Plain Galvanised Steel, Panels: Galvanised Sheet Steel, Epoxy Baked Powder Paint, Light Grey (RAL 7035)		
Evaporator - Type			Flooded - Shell and Tube Evaporator		
Insulation			Class O, UV stable Insulation		
Total Max. Water Flow		l/s	77.9	77.9	77.9
Total Min. Water Flow		l/s	25.8	25.8	25.8
Condenser - Type			Epoxy Coated Aluminium Microchannel & Aluminium Fins		
Face Area Total		m²	28.4	33.2	37.9
Maximum Airflow - EC Fans		m³/s	68.9	80.4	91.8
Condenser Fan & Motor			Sickle Bladed Axial Fan		
Quantity			12	14	16
Diameter		mm	800	800	800
Maximum Speed - EC Fans		rpm	1025	1025	1025
Compressor - Type			Turbocor - Oil Free Compressor		
Quantity			2	2	2
Capacity Control			Variable Frequency Drive (VFD) for Linear Capacity Modulation		
Refrigeration			Dual Circuit	Dual Circuit	Dual Circuit
Refrigerant Pre-charged/ GWP				R134a / 1430	
Charge (Total) CCT1 + CCT2		kg	220 + 215	225 + 220	235 + 225
GWP Tonnes Equivalent CO_2			314.6 + 307.45	321.75 + 314.6	336.05 + 321.75
Refrigeration Control			Electronic Expansion Valve (EEV)		
Water System			Grooved Type Coupling and Pipe Assembly		
Water Inlet / Outlet			DN150	DN150	DN150
Water Drain / Bleed - Evap		inch	1/2	1/2	1/2
Water Volume		l	1027	1204	1282
Minimum System Water Volume	(8)	l	3596	3773	3851
Max System Operating Pressure		Barg	10	10	10
Flow Rate		l/s	28.2	31.5	33.6
Pressure Drop		kPa	82.2	92.8	98.1

(1) Based on FC units performance at 16/10°C return/supply temperatures, 35°C ambient, 20% ethylene glycol. All performance data is supplied in accordance with BS EN 14511-1:2013
(2) EER = DX cooling output / (compressor input power + fan input power)
(3) ESEER based upon unit operating at 12 / 7 °C return / supply temperature, 35°C ambient.
(4) Nominal Free Cooling output at 16/10°C return/supply temperatures, 2°C ambient, 20% ethylene glycol.
(5) Ambient temperature that maximum nominal DX duty can be achieved using Free Cooling only.
(6) This is a nominal figure based on full compressor duty, actual turndown depends on both condensing and evaporating temperatures.
(7) Based on standard unit without options, machine weight includes refrigerant charge, operating weight includes refrigerant charge and water volume. For unit weights with waterside options fitted please contact Airedale.
(8) For minimum system water volume calculation, refer to Design Features & Information - Minimum System Water Volume Calculations.
(9) Height based on standard fan, for optional fan dimensions please contact Airedale

Technical Data

TCF22R12L-23, TCF22R14L-23, TCF22R16L-23

Electrical

			104	105	106
ELECTRICAL DATA			TCF22R12L-23	TCF22R14L-23	TCF22R16L-23
Unit Data					
Full Load Amps	(1)	A	467	475	482
Maximum Start Amps		A	257	265	272
Mains Supply		VAC	400V (±10%) 3PH 50Hz		
Recommended Mains Fuse Size		A	500	500	500
Max Mains Incoming Cable Size (Direct to 3 Phase Mains Isolator)		mm²	2x 300mm² (Torque >20Nm)		
Independent Permanent Supply Recommended Fuse Size		A	25	25	25
Independent Permanent Supply			230V 1PH 50Hz (±10%)		
Max Permanent Incoming Cable Size (Direct to Control Panel Isolator)		mm²	6mm² / 8 AWG		
Control Circuit		VAC	24 VAC & 230VAC (±10%)		
Evaporator					
Immersion Heater Rating		W	340 (2 x 170)	340 (2 x 170)	340 (2 x 170)
External Trace Heating					
Available (fitted by others)		W	500	500	500
Condenser Fan - Per Fan (EC)					
Quantity			12	14	16
Full Load Amps		A	3.9	3.9	3.9
Locked Rotor Amps		A	N/A	N/A	N/A
Motor Rating		kW	2.56	2.56	2.56
Compressor - Per Compressor					
Nominal Run Amps		A	210	210	210
Quantity			2	2	2
Motor Rating		kW	129	129	129
Start Amps		A	2	2	2
Type Of Start			Electronic Soft Start		

(1) Based at full load Conditions and EC Fans
Pump electrical data is avaliable from Airedale upon request.

Technical Data

TCF22R18L-23, TCF22R20L-23

Mechanical

			107	108
Mechanical Data	Notes	Units	TCF22R18L-23	TCF22R20L-23
Cooling Duty - AC Fans	(1)	kW	850	900
Nom Input -Cooling Only		kW	238	253
EER	(2)		3.57	3.55
ESEER	(3)		4.40	4.44
Nominal Output - Free Cooling	(4)	kW	768	838
Ambient when Free Cooling = 100% Nominal DX	(5)	°C	0.5	1.0
Capacity Steps	(6)	%	15-100%	15-100%
Dimensions (H x W x L)	(9)	mm	2800 x 2200 x 10550	2800 x 2200 x 11682
Machine Weight	(7)	kg	11080	12060
Operating Weight	(7)	kg	12370	13420
Construction Material			Base: Plain Galvanised Steel, Panels: Galvanised Sheet Steel, Epoxy Baked Powder Paint, Light Grey (RAL 7035)	
Evaporator - Type			Flooded - Shell and Tube Evaporator	
Insulation			Class O, UV stable Insulation	
Total Max. Water Flow		l/s	77.9	77.9
Total Min. Water Flow		l/s	25.8	25.8
Condenser - Type			Epoxy Coated Aluminium Microchannel & Aluminium Fins	
Face Area Total		m²	42.6	47.4
Maximum Airflow - EC Fans		m³/s	103.3	114.8
Condenser Fan & Motor			Sickle Bladed Axial Fan	
Quantity			18	20
Diameter		mm	800	800
Maximum Speed - EC Fans		rpm	1025	1025
Compressor - Type			Turbocor - Oil Free Compressor	
Quantity			2	2
Capacity Control			Variable Frequency Drive (VFD) for Linear Capacity Modulation	
Refrigeration			Dual Circuit	Dual Circuit
Refrigerant Pre-charged/ GWP			R134a / 1430	
Charge (Total) CCT1 + CCT2		kg	235 + 230	245 + 240
GWP Tonnes Equivalent CO_2			336.05 + 328.9	350.35 + 343.2
Refrigeration Control			Electronic Expansion Valve (EEV)	
Water System			Grooved Type Coupling and Pipe Assembly	
Water Inlet / Outlet			DN150	DN150
Water Drain / Bleed - Evap		inch	1/2	1/2
Water Volume		l	1405	1481
Minimum System Water Volume	(8)	l	3974	4050
Max System Operating Pressure		Barg	10	10
Flow Rate		l/s	35.7	37.8
Pressure Drop		kPa	105.0	112.5

(1) Based on FC units performance at 16/10°C return/supply temperatures, 35°C ambient, 20% ethylene glycol. All performance data is supplied in accordance with BS EN 14511-1:2013
(2) EER = DX cooling output / (compressor input power + fan input power)
(3) ESEER based upon unit operating at 12 / 7 °C return / supply temperature, 35°C ambient.
(4) Nominal Free Cooling output at 16/10°C return/supply temperatures, 2°C ambient, 20% ethylene glycol.
(5) Ambient temperature that maximum nominal DX duty can be achieved using Free Cooling only.
(6) This is a nominal figure based on full compressor duty, actual turndown depends on both condensing and evaporating temperatures.
(7) Based on standard unit without options, machine weight includes refrigerant charge, operating weight includes refrigerant charge and water volume. For unit weights with waterside options fitted please contact Airedale.
(8) For minimum system water volume calculation, refer to Design Features & Information - Minimum System Water Volume Calculations.
(9) Height based on standard fan, for optional fan dimensions please contact Airedale

Technical Data

TCF22R18L-23, TCF22R20L-23

Electrical

			107	108
ELECTRICAL DATA			TCF22R18L-23	TCF22R20L-23
Unit Data				
Full Load Amps	(1)	A	490	498
Maximum Start Amps		A	280	288
Mains Supply		VAC	400V (±10%) 3PH 50Hz	
Recommended Mains Fuse Size		A	560	560
Max Mains Incoming Cable Size (Direct to 3 Phase Mains Isolator)		mm²	2x 300mm² (Torque >20Nm)	
Independent Permanent Supply Recommended Fuse Size		A	25	25
Independent Permanent Supply			230V 1PH 50Hz (±10%)	
Max Permanent Incoming Cable Size (Direct to Control Panel Isolator)		mm²	6mm² / 8 AWG	
Control Circuit		VAC	24 VAC & 230VAC (±10%)	
Evaporator				
Immersion Heater Rating		W	500 (2x 250)	500 (2x 250)
External Trace Heating				
Available (fitted by others)		W	500	500
Condenser Fan - Per Fan (EC)				
Quantity			18	20
Full Load Amps		A	3.9	3.9
Locked Rotor Amps		A	N/A	N/A
Motor Rating		kW	2.56	2.56
Compressor - Per Compressor				
Nominal Run Amps		A	210	210
Quantity			2	2
Motor Rating		kW	129	129
Start Amps		A	2	2
Type Of Start			Electronic Soft Start	

(1) Based at full load Conditions and EC Fans
Pump electrical data is avaliable from Airedale upon request.

Technical Data

TCF23R12S-24, TCF23R14S-24, TCF23R16S-25, TCF23R18S-25

Mechanical

			109	110	111	112
Mechanical Data	Notes	Units	TCF23R12S-24	TCF23R14S-24	TCF23R16S-25	TCF23R18S-25
Cooling Duty - AC Fans	(1)	kW	630.0	680.0	730	780
Nom Input -Cooling Only		kW	179	188	198	210
EER	(2)		3.52	3.62	3.69	3.72
ESEER	(3)		4.51	4.58	4.59	4.63
Nominal Output - Free Cooling	(4)	kW	531	603	674	744
Ambient when Free Cooling = 100% Nominal DX	(5)	°C	-0.60	0.20	0.80	1.30
Capacity Steps	(6)	%	10-100%	10-100%	10-100%	10-100%
Dimensions (H x W x L)	(9)	mm	2800 x 2200 x 7154	2800 x 2200 x 8286	2800 x 2200 x 9418	2800 x 2200 x 10550
Machine Weight	(7)	kg	8780	9690	10400	11220
Operating Weight	(7)	kg	9700	10710	11570	12450
Construction Material			Base: Plain Galvanised Steel, Panels: Galvanised Sheet Steel, Epoxy Baked Powder Paint, Light Grey (RAL 7035)			
Evaporator - Type			Flooded - Shell and Tube Evaporator			
Insulation			Class O, UV stable Insulation			
Total Max. Water Flow		l/s	70.2	70.2	77.9	77.9
Total Min. Water Flow		l/s	23.5	23.5	25.8	25.8
Condenser - Type			Epoxy Coated Aluminium Microchannel & Aluminium Fins			
Face Area Total		m²	28.4	33.2	37.9	42.6
Maximum Airflow - EC Fans		m³/s	68.9	80.4	91.8	103.3
Condenser Fan & Motor			Sickle Bladed Axial Fan			
Quantity			12	14	16	18
Diameter		mm	800	800	800	800
Maximum Speed - EC Fans		rpm	1025	1025	1025	1025
Compressor - Type			Turbocor - Oil Free Compressor			
Quantity			3	3	3	3
Capacity Control			Variable Frequency Drive (VFD) for Linear Capacity Modulation			
Refrigeration			Dual Circuit			
Refrigerant Pre-charged/ GWP			R134a / 1430			
Charge (Total) CCT1 + CCT2		kg	320 + 165	330 + 170	325 + 165	330 + 170
GWP Tonnes Equivalent CO_2			457.6 + 235.95	471.9 + 243.1	464.75 + 235.95	471.9 + 243.1
Refrigeration Control			Electronic Expansion Valve (EEV)			
Water System			Grooved Type Coupling and Pipe Assembly			
Water Inlet / Outlet			DN150	DN150	DN150	DN150
Water Drain / Bleed - Evap		inch	0.5	0.5	0.5	0.5
Water Volume		l	1026	1138	1282	1343
Minimum System Water Volume	(8)	l	2739	2850	2995	3055
Max System Operating Pressure		Barg	10.0	10.0	10	10
Flow Rate		l/s	26.5	28.6	30.7	32.8
Pressure Drop		kPa	77.0	81.6	83.5	89.5

(1) Based on FC units performance at 16/10°C return/supply temperatures, 35°C ambient, 20% ethylene glycol. All performance data is supplied in accordance with BS EN 14511-1:2013
(2) EER = DX cooling output / (compressor input power + fan input power)
(3) ESEER based upon unit operating at 12 / 7 °C return / supply temperature, 35°C ambient.
(4) Nominal Free Cooling output at 16/10°C return/supply temperatures, 2°C ambient, 20% ethylene glycol.
(5) Ambient temperature that maximum nominal DX duty can be achieved using Free Cooling only.
(6) This is a nominal figure based on full compressor duty, actual turndown depends on both condensing and evaporating temperatures.
(7) Based on standard unit without options, machine weight includes refrigerant charge, operating weight includes refrigerant charge and water volume. For unit weights with waterside options fitted please contact Airedale.
(8) For minimum system water volume calculation, refer to Design Features & Information - Minimum System Water Volume Calculations.
(9) Height based on standard fan, for optional fan dimensions please contact Airedale

Technical Data

TCF23R12S-24, TCF23R14S-24, TCF23R16S-25, TCF23R18S-25

Electrical

			109	110	111	112
ELECTRICAL DATA			TCF23R12S-24	TCF23R14S-24	TCF23R16S-25	TCF23R18S-25
Unit Data						
Full Load Amps	(1)	A	482	490	497	505
Maximum Start Amps		A	337	345	352	360
Mains Supply		VAC	400V (±10%) 3PH 50Hz			
Recommended Mains Fuse Size		A	500	560	560	500
Max Mains Incoming Cable Size (Direct to 3 Phase Mains Isolator)		mm²	2x 300mm² (Torque >20Nm)			
Independent Permanent Supply Recommended Fuse Size		A	25	25	25	25
Independent Permanent Supply			230V 1PH 50Hz (±10%)			
Max Permanent Incoming Cable Size (Direct to Control Panel Isolator)		mm²	6mm² / 8 AWG			
Control Circuit		VAC	24 VAC & 230VAC (±10%)			
Evaporator						
Immersion Heater Rating		W	340 (2 x 170)	340 (2 x 170)	340 (2 x 170)	340 (2 x 170)
External Trace Heating						
Available (fitted by others)		W	500	500	500	500
Condenser Fan - Per Fan (EC)						
Quantity			12	14	16	18
Full Load Amps		A	3.9	3.9	3.9	3.9
Locked Rotor Amps		A	N/A	N/A	N/A	N/A
Motor Rating		kW	2.56	2.56	2.56	2.56
Compressor - Per Compressor						
Nominal Run Amps		A	145	145	145	145
Quantity			3	3	3	3
Motor Rating		kW	87	87	87	87
Start Amps		A	2	2	2	2
Type Of Start			Electronic Soft Start			

(1) Based at full load Conditions and EC Fans
Pump electrical data is avaliable from Airedale upon request.

Technical Data

TCF23R18L-28, TCF23R20L-28, TCF23R22L-28, TCF23R24L-28

Mechanical

			113	114	115	116
Mechanical Data	Notes	Units	TCF23R18L-28	TCF23R20L-28	**TCF23R22L-28**	TCF23R24L-28
Cooling Duty - AC Fans	(1)	kW	900	960	**1020**	1080
Nom Input -Cooling Only		kW	265	277	289	304
EER	(2)		3.39	3.47	3.53	3.56
ESEER	(3)		4.38	4.43	4.44	4.47
Nominal Output - Free Cooling	(4)	kW	783	858	932	1006
Ambient when Free Cooling = 100% Nominal DX	(5)	°C	-0.1	0.3	0.7	1.0
Capacity Steps	(6)	%	10-100%	10-100%	10-100%	10-100%
Dimensions (H x W x L)	(9)	mm	2800 x 2200 x 10550	2800 x 2200 x 11682	2800 x 2200 x 12814	2800 x 2200 x 13946
Machine Weight	(7)	kg	12310	13510	14350	15280
Operating Weight	(7)	kg	13720	15170	16100	17160
Construction Material			Base: Plain Galvanised Steel, Panels: Galvanised Sheet Steel, Epoxy Baked Powder Paint, Light Grey (RAL 7035)			
Evaporator - Type			Flooded - Shell and Tube Evaporator			
Insulation			Class O, UV stable Insulation			
Total Max. Water Flow		l/s	108.5	108.5	108.5	108.5
Total Min. Water Flow		l/s	36.2	36.2	36.2	36.2
Condenser - Type			Epoxy Coated Aluminium Microchannel & Aluminium Fins			
Face Area Total		m²	42.6	47.4	52.1	56.8
Maximum Airflow - EC Fans		m³/s	103.3	114.8	126.3	137.8
Condenser Fan & Motor			Sickle Bladed Axial Fan			
Quantity			18	20	22	24
Diameter		mm	800	800	800	800
Maximum Speed - EC Fans		rpm	1025	1025	1025	1025
Compressor - Type			Turbocor - Oil Free Compressor			
Quantity			3	3	3	3
Capacity Control			Variable Frequency Drive (VFD) for Linear Capacity Modulation			
Refrigeration			Dual Circuit	Dual Circuit	Dual Circuit	Dual Circuit
Refrigerant Pre-charged/ GWP			R134a / 1430			
Charge (Total) CCT1 + CCT2		kg	445 + 225	460 + 230	470 + 230	475 + 245
GWP Tonnes Equivalent CO_2			636.35 + 321.75	657.8 + 328.9	672.1 + 328.9	679.25 + 350.35
Refrigeration Control			Electronic Expansion Valve (EEV)			
Water System			Grooved Type Coupling and Pipe Assembly			
Water Inlet / Outlet			DN200	DN200	DN200	DN200
Water Drain / Bleed - Evap		inch	1/2	1/2	0.5	0.5
Water Volume		l	1919	2204	2332	2500
Minimum System Water Volume	(8)	l	4199	4449	4539	4669
Max System Operating Pressure		Barg	10	10	10	10
Flow Rate		l/s	37.8	40.4	42.9	45.4
Pressure Drop		kPa	70.7	74.9	79.6	85.0

(1) Based on FC units performance at 16/10°C return/supply temperatures, 35°C ambient, 20% ethylene glycol. All performance data is supplied in accordance with BS EN 14511-1:2013
(2) EER = DX cooling output / (compressor input power + fan input power)
(3) ESEER based upon unit operating at 12 / 7 °C return / supply temperature, 35°C ambient.
(4) Nominal Free Cooling output at 16/10°C return/supply temperatures, 2°C ambient, 20% ethylene glycol.
(5) Ambient temperature that maximum nominal DX duty can be achieved using Free Cooling only.
(6) This is a nominal figure based on full compressor duty, actual turndown depends on both condensing and evaporating temperatures.
(7) Based on standard unit without options, machine weight includes refrigerant charge, operating weight includes refrigerant charge and water volume. For unit weights with waterside options fitted please contact Airedale.
(8) For minimum system water volume calculation, refer to Design Features & Information - Minimum System Water Volume Calculations.
(9) Height based on standard fan, for optional fan dimensions please contact Airedale

Technical Data

TCF23R18L-28, TCF23R20L-28, TCF23R22L-28, TCF23R24L-28

Electrical

			113	114	115	116
ELECTRICAL DATA			TCF23R18L-28	TCF23R20L-28	TCF23R22L-28	TCF23R24L-28
Unit Data						
Full Load Amps	(1)	A	700	708	716	724
Maximum Start Amps		A	490	498	506	514
Mains Supply		VAC	400V (±10%) 3PH 50Hz			
Recommended Mains Fuse Size		A	750	750	750	750
Max Mains Incoming Cable Size (Direct to 3 Phase Mains Isolator)		mm²	2x 300mm² (Torque >20Nm)			
Independent Permanent Supply Recommended Fuse Size		A	25	25	25	25
Independent Permanent Supply			230V 1PH 50Hz (±10%)			
Max Permanent Incoming Cable Size (Direct to Control Panel Isolator)		mm²	6mm² / 8 AWG			
Control Circuit		VAC	24 VAC & 230VAC (±10%)			
Evaporator						
Immersion Heater Rating		W	500 (2x 250)	500 (2x 250)	500 (2x 250)	500 (2x 250)
External Trace Heating						
Available (fitted by others)		W	500	500	500	500
Condenser Fan - Per Fan (EC)						
Quantity			18	20	22	24
Full Load Amps		A	3.9	3.9	3.9	3.9
Locked Rotor Amps		A	N/A	N/A	N/A	N/A
Motor Rating		kW	2.56	2.56	2.56	2.56
Compressor - Per Compressor						
Nominal Run Amps		A	210	210	210	210
Quantity			3	3	3	3
Motor Rating		kW	129	129	129	129
Start Amps		A	2	2	2	2
Type Of Start			Electronic Soft Start			

(1) Based at full load Conditions and EC Fans
Pump electrical data is avaliable from Airedale upon request.

Technical Data

TCF24R16S-26, TCF24R18S-26, TCF24R20S-26

Mechanical

			117	118	119
Mechanical Data	Notes	Units	TCF24R16S-26	TCF24R18S-26	TCF24R20S-26
Cooling Duty - AC Fans	(1)	kW	820	860	900
Nom Input -Cooling Only		kW	234	240	247
EER	(2)		3.51	3.59	3.65
ESEER	(3)		4.65	4.68	4.71
Nominal Output - Free Cooling	(4)	kW	702	771	838
Ambient when Free Cooling = 100% Nominal DX	(5)	°C	-0.4	0.4	1.0
Capacity Steps	(6)	%	7.5-100%	7.5-100%	7.5-100%
Dimensions (H x W x L)	(9)	mm	2800 x 2200 x 9418	2800 x 2200 x 10550	2800 x 2200 x 11682
Machine Weight	(7)	kg	11900	12590	13780
Operating Weight	(7)	kg	13210	14040	15390
Construction Material			Base: Plain Galvanised Steel, Panels: Galvanised Sheet Steel, Epoxy Baked Powder Paint, Light Grey (RAL 7035)		
Evaporator - Type			Flooded - Shell and Tube Evaporator		
Insulation			Class O, UV stable Insulation		
Total Max. Water Flow		l/s	99.7	99.7	99.7
Total Min. Water Flow		l/s	33.2	33.2	33.2
Condenser - Type			Epoxy Coated Aluminium Microchannel & Aluminium Fins		
Face Area Total		m²	37.9	42.6	47.4
Maximum Airflow - EC Fans		m³/s	91.8	103.3	114.8
Condenser Fan & Motor			Sickle Bladed Axial Fan		
Quantity			16	18	20
Diameter		mm	800	800	800
Maximum Speed - EC Fans		rpm	1025	1025	1025
Compressor - Type			Turbocor - Oil Free Compressor		
Quantity			4	4	4
Capacity Control			Variable Frequency Drive (VFD) for Linear Capacity Modulation		
Refrigeration			Dual Circuit	Dual Circuit	Dual Circuit
Refrigerant Pre-charged/ GWP			R134a / 1430		
Charge (Total) CCT1 + CCT2		kg	350 + 345	360 + 350	365 + 365
GWP Tonnes Equivalent CO_2			500.5 + 493.35	514.8 + 500.5	521.95 + 521.95
Refrigeration Control			Electronic Expansion Valve (EEV)		
Water System			Grooved Type Coupling and Pipe Assembly		
Water Inlet / Outlet			DN200	DN200	DN200
Water Drain / Bleed - Evap		inch	1/2	1/2	1/2
Water Volume		l	1785	1954	2160
Minimum System Water Volume	(8)	l	3243	3383	3553
Max System Operating Pressure		Barg	10	10	10
Flow Rate		l/s	34.5	36.2	37.8
Pressure Drop		kPa	67.0	67.9	69.6

(1) Based on FC units performance at 16/10°C return/supply temperatures, 35°C ambient, 20% ethylene glycol. All performance data is supplied in accordance with BS EN 14511-1:2013
(2) EER = DX cooling output / (compressor input power + fan input power)
(3) ESEER based upon unit operating at 12 / 7 °C return / supply temperature, 35°C ambient.
(4) Nominal Free Cooling output at 16/10°C return/supply temperatures, 2°C ambient, 20% ethylene glycol.
(5) Ambient temperature that maximum nominal DX duty can be achieved using Free Cooling only.
(6) This is a nominal figure based on full compressor duty, actual turndown depends on both condensing and evaporating temperatures.
(7) Based on standard unit without options, machine weight includes refrigerant charge, operating weight includes refrigerant charge and water volume.
For unit weights with waterside options fitted please contact Airedale.
(8) For minimum system water volume calculation, refer to Design Features & Information - Minimum System Water Volume Calculations.
(9) Height based on standard fan, for optional fan dimensions please contact Airedale

Technical Data

TCF24R16S-26, TCF24R18S-26, TCF24R20S-26

Electrical

			117	118	119
ELECTRICAL DATA			TCF24R16S-26	TCF24R18S-26	**TCF24R20S-26**
Unit Data					
Full Load Amps	(1)	A	642	650	658
Maximum Start Amps		A	497	497	513
Mains Supply		VAC	400V (±10%) 3PH 50Hz		
Recommended Mains Fuse Size		A	670	670	670
Max Mains Incoming Cable Size (Direct to 3 Phase Mains Isolator)		mm²	2x 300mm² (Torque >20Nm)		
Independent Permanent Supply Recommended Fuse Size		A	25	25	25
Independent Permanent Supply			230V 1PH 50Hz (±10%)		
Max Permanent Incoming Cable Size (Direct to Control Panel Isolator)		mm²	6mm² / 8 AWG		
Control Circuit		VAC	24 VAC & 230VAC (±10%)		
Evaporator					
Immersion Heater Rating		W	500 (2x 250)	500 (2x 250)	500 (2x 250)
External Trace Heating					
Available (fitted by others)		W	500	500	500
Condenser Fan - Per Fan (EC)					
Quantity			16	18	20
Full Load Amps		A	3.9	3.9	3.9
Locked Rotor Amps		A	N/A	N/A	N/A
Motor Rating		kW	2.56	2.56	2.56
Compressor - Per Compressor					
Nominal Run Amps		A	145	145	145
Quantity			4	4	4
Motor Rating		kW	87	87	87
Start Amps		A	2	2	2
Type Of Start			Electronic Soft Start		

(1) Based at full load Conditions and EC Fans
Pump electrical data is avaliable from Airedale upon request.

Technical Data

TCF24R22S-27, TCF24R24S-27

Mechanical

			120	121
Mechanical Data	Notes	Units	TCF24R22S-27	TCF24R24S-27
Cooling Duty - AC Fans	(1)	kW	950	1000
Nom Input -Cooling Only		kW	258	269
EER	(2)		3.69	3.71
ESEER	(3)		4.71	4.71
Nominal Output - Free Cooling	(4)	kW	908	977
Ambient when Free Cooling = 100% Nominal DX	(5)	°C	1.3	1.7
Capacity Steps	(6)	%	7.5-100%	7.5-100%
Dimensions (H x W x L)	(9)	mm	2800 x 2200 x 12814	2800 x 2200 x 13946
Machine Weight	(7)	kg	14590	15570
Operating Weight	(7)	kg	16310	17490
Construction Material			Base: Plain Galvanised Steel, Panels: Galvanised Sheet Steel, Epoxy Baked Powder Paint, Light Grey (RAL 7035)	
Evaporator - Type			Flooded - Shell and Tube Evaporator	
Insulation			Class O, UV stable Insulation	
Total Max. Water Flow		l/s	104.2	104.2
Total Min. Water Flow		l/s	34.6	34.6
Condenser - Type			Epoxy Coated Aluminium Microchannel & Aluminium Fins	
Face Area Total		m²	52.1	56.8
Maximum Airflow - EC Fans		m³/s	126.3	137.8
Condenser Fan & Motor			Sickle Bladed Axial Fan	
Quantity			22	24
Diameter		mm	800	800
Maximum Speed - EC Fans		rpm	1025	1025
Compressor - Type			Turbocor - Oil Free Compressor	
Quantity			4	4
Capacity Control			Variable Frequency Drive (VFD) for Linear Capacity Modulation	
Refrigeration			Dual Circuit	Dual Circuit
Refrigerant Pre-charged/ GWP			R134a / 1430	
Charge (Total) CCT1 + CCT2		kg	360 + 365	375 + 370
GWP Tonnes Equivalent CO_2			514.8 + 521.95	536.25 + 529.1
Refrigeration Control			Electronic Expansion Valve (EEV)	
Water System			Grooved Type Coupling and Pipe Assembly	
Water Inlet / Outlet			DN200	DN200
Water Drain / Bleed - Evap		inch	1/2	1/2
Water Volume		l	2298	2544
Minimum System Water Volume	(8)	l	3653	3863
Max System Operating Pressure		Barg	10	10
Flow Rate		l/s	40.0	42.1
Pressure Drop		kPa	71.4	75.6

(1) Based on FC units performance at 16/10°C return/supply temperatures, 35°C ambient, 20% ethylene glycol. All performance data is supplied in accordance with BS EN 14511-1:2013
(2) EER = DX cooling output / (compressor input power + fan input power)
(3) ESEER based upon unit operating at 12 / 7 °C return / supply temperature, 35°C ambient.
(4) Nominal Free Cooling output at 16/10°C return/supply temperatures, 2°C ambient, 20% ethylene glycol.
(5) Ambient temperature that maximum nominal DX duty can be achieved using Free Cooling only.
(6) This is a nominal figure based on full compressor duty, actual turndown depends on both condensing and evaporating temperatures.
(7) Based on standard unit without options, machine weight includes refrigerant charge, operating weight includes refrigerant charge and water volume. For unit weights with waterside options fitted please contact Airedale.
(8) For minimum system water volume calculation, refer to Design Features & Information - Minimum System Water Volume Calculations.
(9) Height based on standard fan, for optional fan dimensions please contact Airedale

Technical Data

TCF24R22S-27, TCF24R24S-27

Electrical

			120	121
ELECTRICAL DATA			TCF24R22S-27	TCF24R24S-27
Unit Data				
Full Load Amps	(1)	A	666	674
Maximum Start Amps		A	521	529
Mains Supply		VAC	400V (±10%) 3PH 50Hz	
Recommended Mains Fuse Size		A	710	710
Max Mains Incoming Cable Size (Direct to 3 Phase Mains Isolator)		mm²	2x 300mm² (Torque >20Nm)	
Independent Permanent Supply Recommended Fuse Size		A	25	25
Independent Permanent Supply			230V 1PH 50Hz (±10%)	
Max Permanent Incoming Cable Size (Direct to Control Panel Isolator)		mm²	6mm² / 8 AWG	
Control Circuit		VAC	24 VAC & 230VAC (±10%)	
Evaporator				
Immersion Heater Rating		W	500 (2x 250)	500 (2x 250)
External Trace Heating				
Available (fitted by others)		W	500	500
Condenser Fan - Per Fan (EC)				
Quantity			22	24
Full Load Amps		A	3.9	3.9
Locked Rotor Amps		A	N/A	N/A
Motor Rating		kW	2.56	2.56
Compressor - Per Compressor				
Nominal Run Amps		A	145	145
Quantity			4	4
Motor Rating		kW	87	87
Start Amps		A	2	2
Type Of Start			Electronic Soft Start	

(1) Based at full load Conditions and EC Fans
Pump electrical data is avaliable from Airedale upon request.

Technical Data

TCF24R22L-21, TCF24R24L-21

Mechanical

			122	123
Mechanical Data	Notes	Units	TCF24R22L-21	TCF24R24L-21
Cooling Duty - AC Fans	(1)	kW	1100	1160
Nom Input -Cooling Only		kW	339	349
EER	(2)		3.25	3.33
ESEER	(3)		4.48	4.50
Nominal Output - Free Cooling	(4)	kW	957	1032
Ambient when Free Cooling = 100% Nominal DX	(5)	°C	-0.1	0.3
Capacity Steps	(6)	%	7.5-100%	7.5-100%
Dimensions (H x W x L)	(9)	mm	2800 x 2200 x 12814	2800 x 2200 x 13946
Machine Weight	(7)	kg	14800	15800
Operating Weight	(7)	kg	16530	17730
Construction Material			Base: Plain Galvanised Steel, Panels: Galvanised Sheet Steel, Epoxy Baked Powder Paint, Light Grey (RAL 7035)	
Evaporator - Type			Flooded - Shell and Tube Evaporator	
Insulation			Class O, UV stable Insulation	
Total Max. Water Flow		l/s	108.5	108.5
Total Min. Water Flow		l/s	36.2	36.2
Condenser - Type			Epoxy Coated Aluminium Microchannel & Aluminium Fins	
Face Area Total		m²	52.1	56.8
Maximum Airflow - EC Fans		m³/s	126.3	137.8
Condenser Fan & Motor			Sickle Bladed Axial Fan	
Quantity			22	24
Diameter		mm	800	800
Maximum Speed - EC Fans		rpm	1025	1025
Compressor - Type			Turbocor - Oil Free Compressor	
Quantity			4	4
Capacity Control			Variable Frequency Drive (VFD) for Linear Capacity Modulation	
Refrigeration			Dual Circuit	Dual Circuit
Refrigerant Pre-charged/ GWP			R134a / 1430	
Charge (Total) CCT1 + CCT2		kg	365 + 370	380 + 380
GWP Tonnes Equivalent CO_2			521.95 + 529.1	543.4 + 543.4
Refrigeration Control			Electronic Expansion Valve (EEV)	
Water System			Grooved Type Coupling and Pipe Assembly	
Water Inlet / Outlet			DN200	DN200
Water Drain / Bleed - Evap		inch	1/2	1/2
Water Volume		l	2309	2554
Minimum System Water Volume	(8)	l	4519	4729
Max System Operating Pressure		Barg	10	10
Flow Rate		l/s	46.3	48.8
Pressure Drop		kPa	90.5	96.1

(1) Based on FC units performance at 16/10°C return/supply temperatures, 35°C ambient, 20% ethylene glycol. All performance data is supplied in accordance with BS EN 14511-1:2013
(2) EER = DX cooling output / (compressor input power + fan input power)
(3) ESEER based upon unit operating at 12 / 7 °C return / supply temperature, 35°C ambient.
(4) Nominal Free Cooling output at 16/10°C return/supply temperatures, 2°C ambient, 20% ethylene glycol.
(5) Ambient temperature that maximum nominal DX duty can be achieved using Free Cooling only.
(6) This is a nominal figure based on full compressor duty, actual turndown depends on both condensing and evaporating temperatures.
(7) Based on standard unit without options, machine weight includes refrigerant charge, operating weight includes refrigerant charge and water volume. For unit weights with waterside options fitted please contact Airedale.
(8) For minimum system water volume calculation, refer to Design Features & Information - Minimum System Water Volume Calculations.
(9) Height based on standard fan, for optional fan dimensions please contact Airedale

Technical Data

TCF24R22L-21, TCF24R24L-21

Electrical

			122	123
ELECTRICAL DATA			TCF24R22L-21	TCF24R24L-21
Unit Data				
Full Load Amps	(1)	A	926	934
Maximum Start Amps		A	716	724
Mains Supply		VAC	400V (±10%) 3PH 50Hz	
Recommended Mains Fuse Size		A	1000	1000
Max Mains Incoming Cable Size (Direct to 3 Phase Mains Isolator)		mm²	2x 300mm² (Torque >20Nm)	
Independent Permanent Supply Recommended Fuse Size		A	25	25
Independent Permanent Supply			230V 1PH 50Hz (±10%)	
Max Permanent Incoming Cable Size (Direct to Control Panel Isolator)		mm²	6mm² / 8 AWG	
Control Circuit		VAC	24 VAC & 230VAC (±10%)	
Evaporator				
Immersion Heater Rating		W	500 (2x 250)	500 (2x 250)
External Trace Heating				
Available (fitted by others)		W	500	500
Condenser Fan - Per Fan (EC)				
Quantity			22	24
Full Load Amps		A	3.9	3.9
Locked Rotor Amps		A	N/A	N/A
Motor Rating		kW	2.56	2.56
Compressor - Per Compressor				
Nominal Run Amps		A	210	210
Quantity			4	4
Motor Rating		kW	129	129
Start Amps		A	2	2
Type Of Start			Electronic Soft Start	

(1) Based at full load Conditions and EC Fans
Pump electrical data is avaliable from Airedale upon request.

Technical Data -TCF (X) TCF11X06S-07, TCF11X08S-07, TCF11X06L-11

Mechanical

			124	125	126
Mechanical Data	Notes	Units	TCF11X06S-07	TCF11X08S-07	TCF11X06L-11
Cooling Duty - AC Fans	(1)	kW	250	260	350
Nom Input -Cooling Only		kW	80	79	154
EER	(2)		3.14	3.30	2.28
ESEER	(3)		3.78	3.92	3.54
Nominal Output - Free Cooling	(4)	kW	217	267	238
Ambient when Free Cooling = 100% Nominal DX	(5)	°C	-0.1	2.3	-4.6
Capacity Steps	(6)	%	30-100%	30-100%	30-100%
Dimensions (H x W x L)	(9)	mm	2800 x 2200 x 3758	2800 x 2200 x 4890	2800 x 2200 x 3758
Machine Weight	(7)	kg	3965	4750	4410
Operating Weight	(7)	kg	4515	5425	5055
Construction Material			Base: Plain Galvanised Steel, Panels: Galvanised Sheet Steel, Epoxy Baked Powder Paint, Light Grey (RAL 7035)		
Evaporator - Type			Flooded - Shell and Tube Evaporator		
Insulation			Class O, UV stable Insulation		
Total Max. Water Flow		l/s	25.0	25.0	30.5
Total Min. Water Flow		l/s	8.3	8.3	10.0
Condenser - Type			Epoxy Coated Aluminium Microchannel & Aluminium Fins		
Face Area Total		m²	14.2	18.9	14.2
Maximum Airflow - EC Fans		m³/s	23.3	31.1	23.3
Condenser Fan & Motor			Sickle Bladed Axial Fan		
Quantity			6	8	6
Diameter		mm	800	800	800
Maximum Speed - EC Fans		rpm	715	715	715
Compressor - Type			Turbocor - Oil Free Compressor		
Quantity			1	1	1
Capacity Control			Variable Frequency Drive (VFD) for Linear Capacity Modulation		
Refrigeration			Single Circuit	Single Circuit	Single Circuit
Refrigerant Pre-charged/ GWP			R134a / 1430		
Charge (Total) CCT1 + CCT2		kg	135	150	195
GWP Tonnes Equivalent CO_2			193	215	279
Refrigeration Control			Electronic Expansion Valve (EEV)		
Water System			Grooved Type Coupling and Pipe Assembly		
Water Inlet / Outlet			DN100	DN100	DN125
Water Drain / Bleed - Evap		inch	1/2	1/2	1/2
Water Volume		l	424	514	513
Minimum System Water Volume	(8)	l	2137	2226	3082
Max System Operating Pressure		Barg	10	10	10
Flow Rate		l/s	10.5	10.9	14.7
Pressure Drop		kPa	72.7	70.9	88.7

(1) Based on FC units performance at 16/10°C return/supply temperatures, 35°C ambient, 20% ethylene glycol. All performance data is supplied in accordance with BS EN 14511-1:2013
(2) EER = DX cooling output / (compressor input power + fan input power)
(3) ESEER based upon unit operating at 12 / 7 °C return / supply temperature, 35°C ambient.
(4) Nominal Free Cooling output at 16/10°C return/supply temperatures, 2°C ambient, 20% ethylene glycol.
(5) Ambient temperature that maximum nominal DX duty can be achieved using Free Cooling only.
(6) This is a nominal figure based on full compressor duty, actual turndown depends on both condensing and evaporating temperatures.
(7) Based on standard unit without options, machine weight includes refrigerant charge, operating weight includes refrigerant charge and water volume. For unit weights with waterside options fitted please contact Airedale.
(8) For minimum system water volume calculation, refer to Design Features & Information - Minimum System Water Volume Calculations.
(9) Height based on standard fan, for optional fan dimensions please contact Airedale

Technical Data

TCF11X06S-07, TCF11X08S-07, TCF11X06L-11

Electrical

			124	125	126
ELECTRICAL DATA			TCF11X06S-07	TCF11X08S-07	TCF11X06L-11
Unit Data					
Full Load Amps	(1)	A	168	176	233
Maximum Start Amps		A	2	2	2
Mains Supply		VAC	400V (±10%) 3PH 50Hz		
Recommended Mains Fuse Size		A	200	200	250
Max Mains Incoming Cable Size (Direct to 3 Phase Mains Isolator)		mm²	2x 300mm² (Torque >20Nm)		
Independent Permanent Supply Recommended Fuse Size		A	25	25	251
Independent Permanent Supply		VAC	230V 1PH 50Hz (±10%)		
Max Permanent Incoming Cable Size (Direct to Control Panel Isolator)		mm²	6mm² / 8 AWG		
Control Circuit		VAC	24 VAC & 230VAC (±10%)		
Evaporator					
Immersion Heater Rating		W	500 (2x 250)	500 (2x 250)	500 (2x 250)
External Trace Heating					
Available (fitted by others)		W	500	500	500
Condenser Fan - Per Fan (EC)					
Quantity			6	8	6
Full Load Amps		A	3.9	3.9	3.9
Locked Rotor Amps		A	N/A	N/A	N/A
Motor Rating		kW	2.56	2.56	2.56
Compressor - Per Compressor					
Nominal Run Amps		A	145	145	210
Quantity			1	1	1
Motor Rating		kW	87	87	129
Start Amps		A	2	2	2
Type Of Start			Electronic Soft Start		

(1) Based at full load Conditions and EC Fans
Pump electrical data is avaliable from Airedale upon request.

Technical Data

TCF11X08L-08, TCF11X10L-10, TCF12X08S-09

Mechanical

			127	128	129
Mechanical Data	Notes	Units	TCF11X08L-08	TCF11X10L-10	TCF12X08S-09
Cooling Duty - AC Fans	(1)	kW	385	410	415
Nom Input -Cooling Only		kW	159	158	133
EER	(2)		2.42	2.59	3.11
ESEER	(3)		3.67	3.74	4.12
Nominal Output - Free Cooling	(4)	kW	302	360	308
Ambient when Free Cooling = 100% Nominal DX	(5)	°C	-1.9	0.0	-2.9
Capacity Steps	(6)	%	30-100%	30-100%	15-100%
Dimensions (H x W x L)	(9)	mm	2800 x 2200 x 4890	2800 x 2200 x 6022	2800 x 2200 x 4890
Machine Weight	(7)	kg	5070	6120	5495
Operating Weight	(7)	kg	5755	6900	5935
Construction Material			Base: Plain Galvanised Steel, Panels: Galvanised Sheet Steel, Epoxy Baked Powder Paint, Light Grey (RAL 7035)		
Evaporator - Type			Flooded - Shell and Tube Evaporator		
Insulation			Class O, UV stable Insulation		
Total Max. Water Flow		l/s	43.6	37.5	50.0
Total Min. Water Flow		l/s	14.4	12.5	16.7
Condenser - Type			Epoxy Coated Aluminium Microchannel & Aluminium Fins		
Face Area Total		m²	18.9	23.7	18.9
Maximum Airflow - EC Fans		m³/s	31.1	38.9	31.1
Condenser Fan & Motor			Sickle Bladed Axial Fan		
Quantity			8	10	8
Diameter		mm	800	800	800
Maximum Speed - EC Fans		rpm	715	715	715
Compressor - Type			Turbocor - Oil Free Compressor		
Quantity			1	1	2
Capacity Control			Variable Frequency Drive (VFD) for Linear Capacity Modulation		
Refrigeration			Single Circuit	Single Circuit	Single Circuit
Refrigerant Pre-charged/ GWP			R134a / 1430		
Charge (Total) CCT1 + CCT2		kg	195	305	195
GWP Tonnes Equivalent CO_2			279	436	279
Refrigeration Control			Electronic Expansion Valve (EEV)		
Water System			Grooved Type Coupling and Pipe Assembly		
Water Inlet / Outlet			DN125	DN125	DN125
Water Drain / Bleed - Evap		inch	1/2	1/2	1/2
Water Volume		l	586	673	401
Minimum System Water Volume	(8)	l	3155	3242	2114
Max System Operating Pressure		Barg	10	10	10
Flow Rate		l/s	16.2	17.2	18.1
Pressure Drop		kPa	63.5	76.2	73.2

(1) Based on FC units performance at 16/10°C return/supply temperatures, 35°C ambient, 20% ethylene glycol. All performance data is supplied in accordance with BS EN 14511-1:2013
(2) EER = DX cooling output / (compressor input power + fan input power)
(3) ESEER based upon unit operating at 12 / 7 °C return / supply temperature, 35°C ambient.
(4) Nominal Free Cooling output at 16/10°C return/supply temperatures, 2°C ambient, 20% ethylene glycol.
(5) Ambient temperature that maximum nominal DX duty can be achieved using Free Cooling only.
(6) This is a nominal figure based on full compressor duty, actual turndown depends on both condensing and evaporating temperatures.
(7) Based on standard unit without options, machine weight includes refrigerant charge, operating weight includes refrigerant charge and water volume. For unit weights with waterside options fitted please contact Airedale.
(8) For minimum system water volume calculation, refer to Design Features & Information - Minimum System Water Volume Calculations.
(9) Height based on standard fan, for optional fan dimensions please contact Airedale

Technical Data

TCF11X08L-08, TCF11X10L-10, TCF12X08S-09

Electrical

			127	128	129
ELECTRICAL DATA			TCF11X08L-08	TCF11X10L-10	TCF12X08S-09
Unit Data					
Full Load Amps	(1)	A	241	249	321
Maximum Start Amps		A	2	2	176
Mains Supply		VAC	400V (±10%) 3PH 50Hz		
Recommended Mains Fuse Size		A	250	250	355
Max Mains Incoming Cable Size (Direct to 3 Phase Mains Isolator)		mm²	2x 300mm² (Torque >20Nm)		
Independent Permanent Supply Recommended Fuse Size		A	25	25	25
Independent Permanent Supply		VAC	230V 1PH 50Hz (±10%)		
Max Permanent Incoming Cable Size (Direct to Control Panel Isolator)		mm²	6mm² / 8 AWG		
Control Circuit		VAC	24 VAC & 230VAC (±10%)		
Evaporator					
Immersion Heater Rating		W	500 (2x 250)	500 (2x 250)	500 (2x 250)
External Trace Heating					
Available (fitted by others)		W	500	500	500
Condenser Fan - Per Fan (EC)					
Quantity			8	10	8
Full Load Amps		A	3.9	3.9	3.9
Locked Rotor Amps		A	N/A	N/A	N/A
Motor Rating		kW	2.56	2.56	2.56
Compressor - Per Compressor					
Nominal Run Amps		A	210	210	145
Quantity			1	1	2
Motor Rating		kW	129	129	87
Start Amps		A	2	2	2
Type Of Start			Electronic Soft Start		

(1) Based at full load Conditions and EC Fans
Pump electrical data is avaliable from Airedale upon request.

Technical Data

TCF12X10S-05, TCF12X12S-05, TCF12X14S-05

Mechanical

			130	131	132
Mechanical Data	Notes	Units	TCF12X10S-05	TCF12X12S-05	TCF12X14S-05
Cooling Duty - AC Fans	(1)	kW	480	510	540
Nom Input -Cooling Only		kW	144	147	153
EER	(2)		3.32	3.47	3.54
ESEER	(3)		4.33	4.56	4.58
Nominal Output - Free Cooling	(4)	kW	377	436	494
Ambient when Free Cooling = 100% Nominal DX	(5)	°C	-1.8	-0.4	0.7
Capacity Steps	(6)	%	15-100%	15-100%	15-100%
Dimensions (H x W x L)	(9)	mm	2800 x 2200 x 6022	2800 x 2200 x 7154	2800 x 2200 x 8286
Machine Weight	(7)	kg	6490	7385	8315
Operating Weight	(7)	kg	7320	8335	9335
Construction Material			Base: Plain Galvanised Steel, Panels: Galvanised Sheet Steel, Epoxy Baked Powder Paint, Light Grey (RAL 7035)		
Evaporator - Type			Flooded - Shell and Tube Evaporator		
Insulation			Class O, UV stable Insulation		
Total Max. Water Flow		l/s	50.0	50.0	50.0
Total Min. Water Flow		l/s	16.7	16.7	16.7
Condenser - Type			Epoxy Coated Aluminium Microchannel & Aluminium Fins		
Face Area Total		m²	23.7	28.4	33.2
Maximum Airflow - EC Fans		m³/s	38.9	46.6	54.4
Condenser Fan & Motor			Sickle Bladed Axial Fan		
Quantity			10	12	14
Diameter		mm	800	800	800
Maximum Speed - EC Fans		rpm	715	715	715
Compressor - Type			Turbocor - Oil Free Compressor		
Quantity			2	2	2
Capacity Control			Variable Frequency Drive (VFD) for Linear Capacity Modulation		
Refrigeration			Single Circuit	Single Circuit	Single Circuit
Refrigerant Pre-charged/ GWP			R134a / 1430		
Charge (Total) CCT1 + CCT2		kg	275	295	310
GWP Tonnes Equivalent CO_2			393	422	443
Refrigeration Control			Electronic Expansion Valve (EEV)		
Water System			Grooved Type Coupling and Pipe Assembly		
Water Inlet / Outlet			DN125	DN125	DN125
Water Drain / Bleed - Evap		inch	1/2	1/2	1/2
Water Volume		l	700	819	943
Minimum System Water Volume	(8)	l	2412	2532	2655
Max System Operating Pressure		Barg	10	10	10
Flow Rate		l/s	19.3	20.6	21.9
Pressure Drop		kPa	79.9	83.4	89.0

(1) Based on FC units performance at 16/10°C return/supply temperatures, 35°C ambient, 20% ethylene glycol. All performance data is supplied in accordance with BS EN 14511-1:2013
(2) EER = DX cooling output / (compressor input power + fan input power)
(3) ESEER based upon unit operating at 12 / 7 °C return / supply temperature, 35°C ambient.
(4) Nominal Free Cooling output at 16/10°C return/supply temperatures, 2°C ambient, 20% ethylene glycol.
(5) Ambient temperature that maximum nominal DX duty can be achieved using Free Cooling only.
(6) This is a nominal figure based on full compressor duty, actual turndown depends on both condensing and evaporating temperatures.
(7) Based on standard unit without options, machine weight includes refrigerant charge, operating weight includes refrigerant charge and water volume. For unit weights with waterside options fitted please contact Airedale.
(8) For minimum system water volume calculation, refer to Design Features & Information - Minimum System Water Volume Calculations.
(9) Height based on standard fan, for optional fan dimensions please contact Airedale

Technical Data

TCF12X10S-05, TCF12X12S-05, TCF12X14S-05

Electrical

			130	131	132
ELECTRICAL DATA			TCF12X10S-05	TCF12X12S-05	TCF12X14S-05
Unit Data					
Full Load Amps	(1)	A	329	337	345
Maximum Start Amps		A	184	192	200
Mains Supply		VAC	400V (±10%) 3PH 50Hz		
Recommended Mains Fuse Size		A	355	355	355
Max Mains Incoming Cable Size (Direct to 3 Phase Mains Isolator)		mm²	2x 300mm² (Torque >20Nm)		
Independent Permanent Supply Recommended Fuse Size		A	25	25	25
Independent Permanent Supply		VAC	230V 1PH 50Hz (±10%)		
Max Permanent Incoming Cable Size (Direct to Control Panel Isolator)		mm²	6mm² / 8 AWG		
Control Circuit		VAC	24 VAC & 230VAC (±10%)		
Evaporator					
Immersion Heater Rating		W	500 (2x 250)	500 (2x 250)	500 (2x 250)
External Trace Heating					
Available (fitted by others)		W	500	500	500
Condenser Fan - Per Fan (EC)					
Quantity			10	12	14
Full Load Amps		A	3.9	3.9	3.9
Locked Rotor Amps		A	N/A	N/A	N/A
Motor Rating		kW	2.56	2.56	2.56
Compressor - Per Compressor					
Nominal Run Amps		A	145	145	145
Quantity			2	2	2
Motor Rating		kW	129	87	87
Start Amps		A	2	2	2
Type Of Start			Electronic Soft Start		

(1) Based at full load Conditions and EC Fans
Pump electrical data is avaliable from Airedale upon request.

Technical Data

TCF12X12L-12, TCF12X14L-12, TCF12X16L-12

Mechanical

			133	134	135
Mechanical Data	Notes	Units	TCF12X12L-12	TCF12X14L-12	TCF12X16L-12
Cooling Duty - AC Fans	(1)	kW	600	620	740
Nom Input -Cooling Only		kW	205	199	242
EER	(2)		2.93	3.12	3.06
ESEER	(3)		3.89	4.06	4.11
Nominal Output - Free Cooling	(4)	kW	457	515	597
Ambient when Free Cooling = 100% Nominal DX	(5)	°C	-2.4	-0.8	-1.4
Capacity Steps	(6)	%	15-100%	15-100%	15-100%
Dimensions (H x W x L)	(9)	mm	2800 x 2200 x 7154	2800 x 2200 x 8286	2800 x 2200 x 9418
Machine Weight	(7)	kg	8140	9065	9730
Operating Weight	(7)	kg	9270	10295	11295
Construction Material			Base: Plain Galvanised Steel, Panels: Galvanised Sheet Steel, Epoxy Baked Powder Paint, Light Grey (RAL 7035)		
Evaporator - Type			Flooded - Shell and Tube Evaporator		
Insulation			Class O, UV stable Insulation		
Total Max. Water Flow		l/s	70.3	70.3	70.3
Total Min. Water Flow		l/s	23.3	23.3	23.3
Condenser - Type			Epoxy Coated Aluminium Microchannel & Aluminium Fins		
Face Area Total		m²	28.4	33.2	37.9
Maximum Airflow - EC Fans		m³/s	46.6	54.4	62.2
Condenser Fan & Motor			Sickle Bladed Axial Fan		
Quantity			12	14	16
Diameter		mm	800	800	800
Maximum Speed - EC Fans		rpm	715	715	715
Compressor - Type			Turbocor - Oil Free Compressor		
Quantity			2	2	2
Capacity Control			Variable Frequency Drive (VFD) for Linear Capacity Modulation		
Refrigeration			Single Circuit	Single Circuit	Single Circuit
Refrigerant Pre-charged/ GWP			R134a / 1430		
Charge (Total) CCT1 + CCT2		kg	405	420	440
GWP Tonnes Equivalent CO_2			579	601	629
Refrigeration Control			Electronic Expansion Valve (EEV)		
Water System			Grooved Type Coupling and Pipe Assembly		
Water Inlet / Outlet			DN150	DN150	DN150
Water Drain / Bleed - Evap		inch	1/2	1/2	1/2
Water Volume		l	991	1144	1251
Minimum System Water Volume	(8)	l	3560	3713	3820
Max System Operating Pressure		Barg	10	10	10
Flow Rate		l/s	26.5	29.9	32.0
Pressure Drop		kPa	77.7	88.8	94.8

(1) Based on FC units performance at 16/10°C return/supply temperatures, 35°C ambient, 20% ethylene glycol. All performance data is supplied in accordance with BS EN 14511-1:2013
(2) EER = DX cooling output / (compressor input power + fan input power)
(3) ESEER based upon unit operating at 12 / 7 °C return / supply temperature, 35°C ambient.
(4) Nominal Free Cooling output at 16/10°C return/supply temperatures, 2°C ambient, 20% ethylene glycol.
(5) Ambient temperature that maximum nominal DX duty can be achieved using Free Cooling only.
(6) This is a nominal figure based on full compressor duty, actual turndown depends on both condensing and evaporating temperatures.
(7) Based on standard unit without options, machine weight includes refrigerant charge, operating weight includes refrigerant charge and water volume. For unit weights with waterside options fitted please contact Airedale.
(8) For minimum system water volume calculation, refer to Design Features & Information - Minimum System Water Volume Calculations.
(9) Height based on standard fan, for optional fan dimensions please contact Airedale

Technical Data

TCF12X12L-12, TCF12X14L-12, TCF12X16L-12

Electrical

			133	134	145
ELECTRICAL DATA			TCF12X12L-12	TCF12X14L-12	TCF12X16L-12
Unit Data					
Full Load Amps	(1)	A	467	475	482
Maximum Start Amps		A	257	265	272
Mains Supply		VAC	400V (±10%) 3PH 50Hz		
Recommended Mains Fuse Size		A	500	500	500
Max Mains Incoming Cable Size (Direct to 3 Phase Mains Isolator)		mm²	2x 300mm² (Torque >20Nm)		
Independent Permanent Supply Recommended Fuse Size		A	25	25	25
Independent Permanent Supply		VAC	230V 1PH 50Hz (±10%)		
Max Permanent Incoming Cable Size (Direct to Control Panel Isolator)		mm²	6mm² / 8 AWG		
Control Circuit		VAC	24 VAC & 230VAC (±10%)		
Evaporator					
Immersion Heater Rating		W	500 (2x 250)	500 (2x 250)	500 (2x 250)
External Trace Heating					
Available (fitted by others)		W	500	500	500
Condenser Fan - Per Fan (EC)					
Quantity			12	14	16
Full Load Amps		A	3.9	3.9	3.9
Locked Rotor Amps		A	N/A	N/A	N/A
Motor Rating		kW	2.56	2.56	2.56
Compressor - Per Compressor					
Nominal Run Amps		A	210	210	210
Quantity			2	2	2
Motor Rating		kW	129	129	129
Start Amps		A	2	2	2
Type Of Start			Electronic Soft Start		

(1) Based at full load Conditions and EC Fans
Pump electrical data is avaliable from Airedale upon request.

Technical Data

TCF12X18L-13, TCF12X20L-13

Mechanical

			136	137
Mechanical Data	Notes	Units	TCF12X18L-13	TCF12X20L-13
Cooling Duty - AC Fans	(1)	kW	760	780
Nom Input -Cooling Only		kW	243	245
EER	(2)		3.13	3.18
ESEER	(3)		4.16	4.19
Nominal Output - Free Cooling	(4)	kW	653	708
Ambient when Free Cooling = 100% Nominal DX	(5)	°C	-0.3	0.6
Capacity Steps	(6)	%	15-100%	15-100%
Dimensions (H x W x L)	(9)	mm	2800 x 2200 x 10550	2800 x 2200 x 11682
Machine Weight	(7)	kg	10735	11620
Operating Weight	(7)	kg	12195	13200
Construction Material			Base: Plain Galvanised Steel, Panels: Galvanised Sheet Steel, Epoxy Baked Powder Paint, Light Grey (RAL 7035)	
Evaporator - Type			Flooded - Shell and Tube Evaporator	
Insulation			Class O, UV stable Insulation	
Total Max. Water Flow		l/s	74.2	74.2
Total Min. Water Flow		l/s	24.7	24.7
Condenser - Type			Epoxy Coated Aluminium Microchannel & Aluminium Fins	
Face Area Total		m²	42.6	47.4
Maximum Airflow - EC Fans		m³/s	70.0	77.7
Condenser Fan & Motor			Sickle Bladed Axial Fan	
Quantity			18	20
Diameter		mm	800	800
Maximum Speed - EC Fans		rpm	715	715
Compressor - Type			Turbocor - Oil Free Compressor	
Quantity			2	2
Capacity Control			Variable Frequency Drive (VFD) for Linear Capacity Modulation	
Refrigeration			Single Circuit	Single Circuit
Refrigerant Pre-charged/ GWP			R134a / 1430	
Charge (Total) CCT1 + CCT2		kg	430	445
GWP Tonnes Equivalent CO_2			615	636
Refrigeration Control			Electronic Expansion Valve (EEV)	
Water System			Grooved Type Coupling and Pipe Assembly	
Water Inlet / Outlet			DN150	DN150
Water Drain / Bleed - Evap		inch	1/2	1/2
Water Volume		l	1365	1478
Minimum System Water Volume	(8)	l	3934	4047
Max System Operating Pressure		Barg	10	10
Flow Rate		l/s	34.1	36.2
Pressure Drop		kPa	99.3	107.6

(1) Based on FC units performance at 16/10°C return/supply temperatures, 35°C ambient, 20% ethylene glycol. All performance data is supplied in accordance with BS EN 14511-1:2013
(2) EER = DX cooling output / (compressor input power + fan input power)
(3) ESEER based upon unit operating at 12 / 7 °C return / supply temperature, 35°C ambient.
(4) Nominal Free Cooling output at 16/10°C return/supply temperatures, 2°C ambient, 20% ethylene glycol.
(5) Ambient temperature that maximum nominal DX duty can be achieved using Free Cooling only.
(6) This is a nominal figure based on full compressor duty, actual turndown depends on both condensing and evaporating temperatures.
(7) Based on standard unit without options, machine weight includes refrigerant charge, operating weight includes refrigerant charge and water volume. For unit weights with waterside options fitted please contact Airedale.
(8) For minimum system water volume calculation, refer to Design Features & Information - Minimum System Water Volume Calculations.
(9) Height based on standard fan, for optional fan dimensions please contact Airedale

Technical Data

TCF12X18L-13, TCF12X20L-13

Electrical

			136	137
ELECTRICAL DATA			TCF12X18L-13	TCF12X20L-13
Unit Data				
Full Load Amps	(1)	A	490	498
Maximum Start Amps		A	280	288
Mains Supply		VAC	400V (±10%) 3PH 50Hz	
Recommended Mains Fuse Size		A	500	500
Max Mains Incoming Cable Size (Direct to 3 Phase Mains Isolator)		mm²	2x 300mm² (Torque >20Nm)	
Independent Permanent Supply Recommended Fuse Size		A	25	25
Independent Permanent Supply		VAC	230V 1PH 50Hz (±10%)	
Max Permanent Incoming Cable Size (Direct to Control Panel Isolator)		mm²	6mm² / 8 AWG	
Control Circuit		VAC	24 VAC & 230VAC (±10%)	
Evaporator				
Immersion Heater Rating		W	500 (2x 250)	500 (2x 250)
External Trace Heating				
Available (fitted by others)		W	500	500
Condenser Fan - Per Fan (EC)				
Quantity			18	20
Full Load Amps		A	3.9	3.9
Locked Rotor Amps		A	N/A	N/A
Motor Rating		kW	2.56	2.56
Compressor - Per Compressor				
Nominal Run Amps		A	210	210
Quantity			2	2
Motor Rating		kW	129	129
Start Amps		A	2	2
Type Of Start			Electronic Soft Start	

(1) Based at full load Conditions and EC Fans
Pump electrical data is avaliable from Airedale upon request.

Technical Data

TCF22X10S-22, TCF22X12S-22, TCF22X14S-22

Mechanical

			138	139	140
Mechanical Data	Notes	Units	TCF22X10S-22	TCF22X12S-22	TCF22X14S-22
Cooling Duty - AC Fans	(1)	kW	440	490	520
Nom Input -Cooling Only		kW	125	134	140
EER	(2)		3.53	3.65	3.73
ESEER	(3)		4.50	4.48	4.58
Nominal Output - Free Cooling	(4)	kW	367	431	488
Ambient when Free Cooling = 100% Nominal DX	(5)	°C	-0.8	0.1	1.1
Capacity Steps	(6)	%	15-100%	15-100%	15-100%
Dimensions (H x W x L)	(9)	mm	2800 x 2200 x 6022	2800 x 2200 x 7154	2800 x 2200 x 8286
Machine Weight	(7)	kg	6690	7500	8390
Operating Weight	(7)	kg	7330	8230	9270
Construction Material			Base: Plain Galvanised Steel, Panels: Galvanised Sheet Steel, Epoxy Baked Powder Paint, Light Grey (RAL 7035)		
Evaporator - Type			Flooded - Shell and Tube Evaporator		
Insulation			Class O, UV stable Insulation		
Total Max. Water Flow		l/s	49.9	49.9	49.9
Total Min. Water Flow		l/s	16.7	16.7	16.7
Condenser - Type			Epoxy Coated Aluminium Microchannel & Aluminium Fins		
Face Area Total		m²	23.7	28.4	33.2
Maximum Airflow - EC Fans		m³/s	38.9	46.6	54.4
Condenser Fan & Motor			Sickle Bladed Axial Fan		
Quantity			10	12	14
Diameter		mm	800	800	800
Maximum Speed - EC Fans		rpm	715	715	715
Compressor - Type			Turbocor - Oil Free Compressor		
Quantity			2	2	2
Capacity Control			Variable Frequency Drive (VFD) for Linear Capacity Modulation		
Refrigeration			Dual Circuit	Dual Circuit	Dual Circuit
Refrigerant Pre-charged/ GWP			R134a / 1430		
Charge (Total) CCT1 + CCT2		kg	150 + 145	160 + 155	165 + 160
GWP Tonnes Equivalent CO_2			214.5 + 207.35	228.8 + 221.65	235.95 + 228.8
Refrigeration Control			Electronic Expansion Valve (EEV)		
Water System			Grooved Type Coupling and Pipe Assembly		
Water Inlet / Outlet			DN125	DN125	DN125
Water Drain / Bleed - Evap		inch	1/2	1/2	1/2
Water Volume		l	735	830	975
Minimum System Water Volume	(8)	l	2448	2543	2687
Max System Operating Pressure		Barg	10	10	10
Flow Rate		l/s	19.3	20.6	21.9
Pressure Drop		kPa	78.3	82.1	87.9

(1) Based on FC units performance at 16/10°C return/supply temperatures, 35°C ambient, 20% ethylene glycol. All performance data is supplied in accordance with BS EN 14511-1:2013
(2) EER = DX cooling output / (compressor input power + fan input power)
(3) ESEER based upon unit operating at 12 / 7 °C return / supply temperature, 35°C ambient.
(4) Nominal Free Cooling output at 16/10°C return/supply temperatures, 2°C ambient, 20% ethylene glycol.
(5) Ambient temperature that maximum nominal DX duty can be achieved using Free Cooling only.
(6) This is a nominal figure based on full compressor duty, actual turndown depends on both condensing and evaporating temperatures.
(7) Based on standard unit without options, machine weight includes refrigerant charge, operating weight includes refrigerant charge and water volume. For unit weights with waterside options fitted please contact Airedale.
(8) For minimum system water volume calculation, refer to Design Features & Information - Minimum System Water Volume Calculations.
(9) Height based on standard fan, for optional fan dimensions please contact Airedale

Technical Data

TCF22X10S-22, TCF22X12S-22, TCF22X14S-22

Electrical

			138	139	140
ELECTRICAL DATA			TCF22X10S-22	TCF22X12S-22	TCF22X14S-22
Unit Data					
Full Load Amps	(1)	A	329	337	345
Maximum Start Amps		A	184	192	200
Mains Supply		VAC	400V (±10%) 3PH 50Hz		
Recommended Mains Fuse Size		A	355	355	355
Max Mains Incoming Cable Size (Direct to 3 Phase Mains Isolator)		mm²	2x 300mm² (Torque >20Nm)		
Independent Permanent Supply Recommended Fuse Size		A	25	25	25
Independent Permanent Supply		VAC	230V 1PH 50Hz (±10%)		
Max Permanent Incoming Cable Size (Direct to Control Panel Isolator)		mm²	6mm² / 8 AWG		
Control Circuit		VAC	24 VAC & 230VAC (±10%)		
Evaporator					
Immersion Heater Rating		W	500 (2x 250)	500 (2x 250)	500 (2x 250)
External Trace Heating					
Available (fitted by others)		W	500	500	500
Condenser Fan - Per Fan (EC)					
Quantity			10	12	14
Full Load Amps		A	3.9	3.9	3.9
Locked Rotor Amps		A	N/A	N/A	N/A
Motor Rating		kW	2.56	2.56	2.56
Compressor - Per Compressor					
Nominal Run Amps		A	145	145	145
Quantity			2	2	2
Motor Rating		kW	87	87	87
Start Amps		A	2	2	2
Type Of Start			Electronic Soft Start		

(1) Based at full load Conditions and EC Fans
Pump electrical data is avaliable from Airedale upon request.

Technical Data

TCF22X12L-23, TCF22X14L-23, TCF22X16L-23

Mechanical

			141	142	143
Mechanical Data	Notes	Units	TCF22X12L-23	TCF22X14L-23	TCF22X16L-23
Cooling Duty - AC Fans	(1)	kW	600	620	740
Nom Input -Cooling Only		kW	193	187	223
EER	(2)		3.11	3.32	3.31
ESEER	(3)		3.60	4.08	4.16
Nominal Output - Free Cooling	(4)	kW	457	515	597
Ambient when Free Cooling = 100% Nominal DX	(5)	°C	-2.4	-0.8	-1.4
Capacity Steps	(6)	%	15-100%	15-100%	15-100%
Dimensions (H x W x L)	(9)	mm	2800 x 2200 x 7154	2800 x 2200 x 8286	2800 x 2200 x 9418
Machine Weight	(7)	kg	8400	9360	10270
Operating Weight	(7)	kg	9310	10450	11440
Construction Material			Base: Plain Galvanised Steel, Panels: Galvanised Sheet Steel, Epoxy Baked Powder Paint, Light Grey (RAL 7035)		
Evaporator - Type			Flooded - Shell and Tube Evaporator		
Insulation			Class O, UV stable Insulation		
Total Max. Water Flow		l/s	77.9	77.9	77.9
Total Min. Water Flow		l/s	25.8	25.8	25.8
Condenser - Type			Epoxy Coated Aluminium Microchannel & Aluminium Fins		
Face Area Total		m²	28.4	33.2	37.9
Maximum Airflow - EC Fans		m³/s	46.6	54.4	62.2
Condenser Fan & Motor			Sickle Bladed Axial Fan		
Quantity			12	14	16
Diameter		mm	800	800	800
Maximum Speed - EC Fans		rpm	715	715	715
Compressor - Type			Turbocor - Oil Free Compressor		
Quantity			2	2	2
Capacity Control			Variable Frequency Drive (VFD) for Linear Capacity Modulation		
Refrigeration			Dual Circuit	Dual Circuit	Dual Circuit
Refrigerant Pre-charged/ GWP			R134a / 1430		
Charge (Total) CCT1 + CCT2		kg	220 + 215	225 + 220	235 + 225
GWP Tonnes Equivalent CO_2			314.6 + 307.45	321.75 + 314.6	336.05 + 321.75
Refrigeration Control			Electronic Expansion Valve (EEV)		
Water System			Grooved Type Coupling and Pipe Assembly		
Water Inlet / Outlet			DN150	DN150	DN150
Water Drain / Bleed - Evap		inch	1/2	1/2	1/2
Water Volume		l	1027	1204	1282
Minimum System Water Volume	(8)	l	3596	3773	3851
Max System Operating Pressure		Barg	10	10	10
Flow Rate		l/s	26.5	29.9	32.0
Pressure Drop		kPa	73.9	84.3	89.6

(1) Based on FC units performance at 16/10°C return/supply temperatures, 35°C ambient, 20% ethylene glycol. All performance data is supplied in accordance with BS EN 14511-1:2013
(2) EER = DX cooling output / (compressor input power + fan input power)
(3) ESEER based upon unit operating at 12 / 7 °C return / supply temperature, 35°C ambient.
(4) Nominal Free Cooling output at 16/10°C return/supply temperatures, 2°C ambient, 20% ethylene glycol.
(5) Ambient temperature that maximum nominal DX duty can be achieved using Free Cooling only.
(6) This is a nominal figure based on full compressor duty, actual turndown depends on both condensing and evaporating temperatures.
(7) Based on standard unit without options, machine weight includes refrigerant charge, operating weight includes refrigerant charge and water volume. For unit weights with waterside options fitted please contact Airedale.
(8) For minimum system water volume calculation, refer to Design Features & Information - Minimum System Water Volume Calculations.
(9) Height based on standard fan, for optional fan dimensions please contact Airedale

Technical Data

TCF22X12L-23, TCF22X14L-23, TCF22X16L-23

Electrical

			141	142	143
ELECTRICAL DATA			TCF22X12L-23	TCF22X14L-23	TCF22X16L-23
Unit Data					
Full Load Amps	(1)	A	467	475	482
Maximum Start Amps		A	257	265	272
Mains Supply		VAC	400V (±10%) 3PH 50Hz		
Recommended Mains Fuse Size		A	500	500	500
Max Mains Incoming Cable Size (Direct to 3 Phase Mains Isolator)		mm²	2x 300mm² (Torque >20Nm)		
Independent Permanent Supply Recommended Fuse Size		A	25	25	25
Independent Permanent Supply		VAC	230V 1PH 50Hz (±10%)		
Max Permanent Incoming Cable Size (Direct to Control Panel Isolator)		mm²	6mm² / 8 AWG		
Control Circuit		VAC	24 VAC & 230VAC (±10%)		
Evaporator					
Immersion Heater Rating		W	500 (2x 250)	500 (2x 250)	500 (2x 250)
External Trace Heating					
Available (fitted by others)		W	500	500	500
Condenser Fan - Per Fan (EC)					
Quantity			12	14	16
Full Load Amps		A	3.9	3.9	3.9
Locked Rotor Amps		A	N/A	N/A	N/A
Motor Rating		kW	2.56	2.56	2.56
Compressor - Per Compressor					
Nominal Run Amps		A	210	210	210
Quantity			2	2	2
Motor Rating		kW	129	129	129
Start Amps		A	2	2	2
Type Of Start			Electronic Soft Start		

(1) Based at full load Conditions and EC Fans
Pump electrical data is avaliable from Airedale upon request.

Technical Data

TCF22X18L-23, TCF22X20L-23

Mechanical

			144	145
Mechanical Data	Notes	Units	TCF22X18L-23	TCF22X20L-23
Cooling Duty - AC Fans	(1)	kW	760	780
Nom Input -Cooling Only		kW	222	224
EER	(2)		3.42	3.49
ESEER	(3)		4.22	4.26
Nominal Output - Free Cooling	(4)	kW	653	708
Ambient when Free Cooling = 100% Nominal DX	(5)	°C	-0.3	0.6
Capacity Steps	(6)	%	15-100%	15-100%
Dimensions (H x W x L)	(9)	mm	2800 x 2200 x 10550	2800 x 2200 x 11682
Machine Weight	(7)	kg	11080	12060
Operating Weight	(7)	kg	12370	13420
Construction Material			Base: Plain Galvanised Steel, Panels: Galvanised Sheet Steel, Epoxy Baked Powder Paint, Light Grey (RAL 7035)	
Evaporator - Type			Flooded - Shell and Tube Evaporator	
Insulation			Class O, UV stable Insulation	
Total Max. Water Flow		l/s	77.9	77.9
Total Min. Water Flow		l/s	25.8	25.8
Condenser - Type			Epoxy Coated Aluminium Microchannel & Aluminium Fins	
Face Area Total		m²	42.6	47.4
Maximum Airflow - EC Fans		m³/s	70.0	77.7
Condenser Fan & Motor			Sickle Bladed Axial Fan	
Quantity			18	20
Diameter		mm	800	800
Maximum Speed - EC Fans		rpm	715	715
Compressor - Type			Turbocor - Oil Free Compressor	
Quantity			2	2
Capacity Control			Variable Frequency Drive (VFD) for Linear Capacity Modulation	
Refrigeration			Dual Circuit	Dual Circuit
Refrigerant Pre-charged/ GWP			R134a / 1430	
Charge (Total) CCT1 + CCT2		kg	235 + 230	245 + 240
GWP Tonnes Equivalent CO_2			336.05 + 328.9	350.35 + 343.2
Refrigeration Control			Electronic Expansion Valve (EEV)	
Water System			Grooved Type Coupling and Pipe Assembly	
Water Inlet / Outlet			DN150	DN150
Water Drain / Bleed - Evap		inch	1/2	1/2
Water Volume		l	1405	1481
Minimum System Water Volume	(8)	l	3974	4050
Max System Operating Pressure		Barg	10	10
Flow Rate		l/s	34.1	36.2
Pressure Drop		kPa	96.4	103.7

(1) Based on FC units performance at 16/10°C return/supply temperatures, 35°C ambient, 20% ethylene glycol. All performance data is supplied in accordance with BS EN 14511-1:2013
(2) EER = DX cooling output / (compressor input power + fan input power)
(3) ESEER based upon unit operating at 12 / 7 °C return / supply temperature, 35°C ambient.
(4) Nominal Free Cooling output at 16/10°C return/supply temperatures, 2°C ambient, 20% ethylene glycol.
(5) Ambient temperature that maximum nominal DX duty can be achieved using Free Cooling only.
(6) This is a nominal figure based on full compressor duty, actual turndown depends on both condensing and evaporating temperatures.
(7) Based on standard unit without options, machine weight includes refrigerant charge, operating weight includes refrigerant charge and water volume. For unit weights with waterside options fitted please contact Airedale.
(8) For minimum system water volume calculation, refer to Design Features & Information - Minimum System Water Volume Calculations.
(9) Height based on standard fan, for optional fan dimensions please contact Airedale

Technical Data

TCF22X18L-23, TCF22X20L-23

Electrical

			144	145
ELECTRICAL DATA			TCF22X18L-23	TCF22X20L-23
Unit Data				
Full Load Amps	(1)	A	490	498
Maximum Start Amps		A	280	288
Mains Supply		VAC	400V (±10%) 3PH 50Hz	
Recommended Mains Fuse Size		A	500	500
Max Mains Incoming Cable Size (Direct to 3 Phase Mains Isolator)		mm²	2x 300mm² (Torque >20Nm)	
Independent Permanent Supply Recommended Fuse Size		A	25	25
Independent Permanent Supply		VAC	230V 1PH 50Hz (±10%)	
Max Permanent Incoming Cable Size (Direct to Control Panel Isolator)		mm²	6mm² / 8 AWG	6mm² / 8 AWG
Control Circuit		VAC	24 VAC & 230VAC (±10%)	
Evaporator				
Immersion Heater Rating		W	500 (2x 250)	500 (2x 250)
External Trace Heating				
Available (fitted by others)		W	500	500
Condenser Fan - Per Fan (EC)				
Quantity			18	20
Full Load Amps		A	3.9	3.9
Locked Rotor Amps		A	N/A	N/A
Motor Rating		kW	2.56	2.56
Compressor - Per Compressor				
Nominal Run Amps		A	210	210
Quantity			2	2
Motor Rating		kW	129	129
Start Amps		A	2	2
Type Of Start			Electronic Soft Start	

(1) Based at full load Conditions and EC Fans
Pump electrical data is avaliable from Airedale upon request.

Technical Data

TCC22X18L-23, TCF22X20L-23

Mechanical

			144	145
Mechanical Data	Notes	Units	TCF22X18L-23	TCF22X20L-23
Cooling Duty - AC Fans	(1)	kW	760	780
Nom Input -Cooling Only		kW	222	224
EER	(2)		3.42	3.49
ESEER	(3)		4.22	4.26
Nominal Output - Free Cooling	(4)	kW	653	708
Ambient when Free Cooling = 100% Nominal DX	(5)	°C	-0.3	0.6
Capacity Steps	(6)	%	15-100%	15-100%
Dimensions (H x W x L)	(9)	mm	2800 x 2200 x 10550	2800 x 2200 x 11682
Machine Weight	(7)	kg	11080	12060
Operating Weight	(7)	kg	12370	13420
Construction Material			Base: Plain Galvanised Steel, Panels: Galvanised Sheet Steel, Epoxy Baked Powder Paint, Light Grey (RAL 7035)	
Evaporator - Type			Flooded - Shell and Tube Evaporator	
Insulation			Class O, UV stable Insulation	
Total Max. Water Flow		l/s	77.9	77.9
Total Min. Water Flow		l/s	25.8	25.8
Condenser - Type			Epoxy Coated Aluminium Microchannel & Aluminium Fins	
Face Area Total		m²	42.6	47.4
Maximum Airflow - EC Fans		m³/s	70.0	77.7
Condenser Fan & Motor			Sickle Bladed Axial Fan	
Quantity			18	20
Diameter		mm	800	800
Maximum Speed - EC Fans		rpm	715	715
Compressor - Type			Turbocor - Oil Free Compressor	
Quantity			2	2
Capacity Control			Variable Frequency Drive (VFD) for Linear Capacity Modulation	
Refrigeration			Dual Circuit	Dual Circuit
Refrigerant Pre-charged/ GWP			R134a / 1430	
Charge (Total) CCT1 + CCT2		kg	235 + 230	245 + 240
GWP Tonnes Equivalent CO_2			336.05 + 328.9	350.35 + 343.2
Refrigeration Control			Electronic Expansion Valve (EEV)	
Water System			Grooved Type Coupling and Pipe Assembly	
Water Inlet / Outlet			DN150	DN150
Water Drain / Bleed - Evap		inch	1/2	1/2
Water Volume		l	1405	1481
Minimum System Water Volume	(8)	l	3974	4050
Max System Operating Pressure		Barg	10	10
Flow Rate		l/s	34.1	36.2
Pressure Drop		kPa	96.4	103.7

(1) Based on FC units performance at 16/10°C return/supply temperatures, 35°C ambient, 20% ethylene glycol. All performance data is supplied in accordance with BS EN 14511-1:2013
(2) EER = DX cooling output / (compressor input power + fan input power)
(3) ESEER based upon unit operating at 12 / 7 °C return / supply temperature, 35°C ambient.
(4) Nominal Free Cooling output at 16/10°C return/supply temperatures, 2°C ambient, 20% ethylene glycol.
(5) Ambient temperature that maximum nominal DX duty can be achieved using Free Cooling only.
(6) This is a nominal figure based on full compressor duty, actual turndown depends on both condensing and evaporating temperatures.
(7) Based on standard unit without options, machine weight includes refrigerant charge, operating weight includes refrigerant charge and water volume. For unit weights with waterside options fitted please contact Airedale.
(8) For minimum system water volume calculation, refer to Design Features & Information - Minimum System Water Volume Calculations.
(9) Height based on standard fan, for optional fan dimensions please contact Airedale

Technical Data

TCC22X18L-23, TCF22X20L-23

Electrical

			144	145
ELECTRICAL DATA			TCF22X18L-23	TCF22X20L-23
Unit Data				
Full Load Amps	(1)	A	490	498
Maximum Start Amps		A	280	288
Mains Supply		VAC	400V (±10%) 3PH 50Hz	
Recommended Mains Fuse Size		A	500	500
Max Mains Incoming Cable Size (Direct to 3 Phase Mains Isolator)		mm²	2x 300mm² (Torque >20Nm)	
Independent Permanent Supply Recommended Fuse Size		A	25	25
Independent Permanent Supply		VAC	230V 1PH 50Hz (±10%)	
Max Permanent Incoming Cable Size (Direct to Control Panel Isolator)		mm²	6mm² / 8 AWG	6mm² / 8 AWG
Control Circuit		VAC	24 VAC & 230VAC (±10%)	
Evaporator				
Immersion Heater Rating		W	500 (2x 250)	500 (2x 250)
External Trace Heating				
Available (fitted by others)		W	500	500
Condenser Fan - Per Fan (EC)				
Quantity			18	20
Full Load Amps		A	3.9	3.9
Locked Rotor Amps		A	N/A	N/A
Motor Rating		kW	2.56	2.56
Compressor - Per Compressor				
Nominal Run Amps		A	210	210
Quantity			2	2
Motor Rating		kW	129	129
Start Amps		A	2	2
Type Of Start			Electronic Soft Start	

(1) Based at full load Conditions and EC Fans
Pump electrical data is avaliable from Airedale upon request.

Technical Data

TCF23X12S-24, TCF23X14S-24, TCF23X16S-25, TCF23X18S-25

Mechanical

			146	147	148	149
Mechanical Data	Notes	Units	TCF23X12S-24	TCF23X14S-24	TCF23X16S-25	TCF23X18S-25
Cooling Duty - AC Fans	(1)	kW	590	640	690	740
Nom Input -Cooling Only		kW	185	193	202	213
EER	(2)		3.18	3.32	3.41	3.48
ESEER	(3)		4.37	4.47	4.47	4.51
Nominal Output - Free Cooling	(4)	kW	455	520	584	648
Ambient when Free Cooling = 100% Nominal DX	(5)	°C	-2.1	-1.2	-0.5	0.0
Capacity Steps	(6)	%	10-100%	10-100%	10-100%	10-100%
Dimensions (H x W x L)	(9)	mm	2800 x 2200 x 7154	2800 x 2200 x 8286	2800 x 2200 x 9418	2800 x 2200 x 10550
Machine Weight	(7)	kg	8780	9690	10400	11220
Operating Weight	(7)	kg	9700	10710	11570	12450
Construction Material			Base: Plain Galvanised Steel, Panels: Galvanised Sheet Steel, Epoxy Baked Powder Paint, Light Grey (RAL 7035)			
Evaporator - Type			Flooded - Shell and Tube Evaporator			
Insulation			Class O, UV stable Insulation			
Total Max. Water Flow		l/s	70.2	70.2	77.9	77.9
Total Min. Water Flow		l/s	23.5	23.5	25.8	25.8
Condenser - Type			Epoxy Coated Aluminium Microchannel & Aluminium Fins			
Face Area Total		m²	28.4	33.2	37.9	42.6
Maximum Airflow - EC Fans		m³/s	46.6	54.4	62.2	70.0
Condenser Fan & Motor			Sickle Bladed Axial Fan			
Quantity			12	14	16	18
Diameter		mm	800	800	800	800
Maximum Speed - EC Fans		rpm	715	715	715	715
Compressor - Type			Turbocor - Oil Free Compressor			
Quantity			3	3	3	3
Capacity Control			Variable Frequency Drive (VFD) for Linear Capacity Modulation			
Refrigeration			Dual Circuit	Dual Circuit	Dual Circuit	Dual Circuit
Refrigerant Pre-charged/ GWP			R134a / 1430			
Charge (Total) CCT1 + CCT2		kg	320 + 165	330 + 170	325 + 165	330 + 170
GWP Tonnes Equivalent CO_2			457.6 + 235.95	471.9 + 243.1	464.75 + 235.95	471.9 + 243.1
Refrigeration Control			Electronic Expansion Valve (EEV)			
Water System			Grooved Type Coupling and Pipe Assembly			
Water Inlet / Outlet			DN150	DN150	DN150	DN150
Water Drain / Bleed - Evap		inch	1/2	1/2	1/2	0.5
Water Volume		l	1026	1138	1282	1343
Minimum System Water Volume	(8)	l	2739	2850	2995	3055
Max System Operating Pressure		Barg	10	10	10	10
Flow Rate		l/s	24.8	26.9	29.0	31.1
Pressure Drop		kPa	68.8	73.5	75.6	81.5

(1) Based on FC units performance at 16/10°C return/supply temperatures, 35°C ambient, 20% ethylene glycol. All performance data is supplied in accordance with BS EN 14511-1:2013
(2) EER = DX cooling output / (compressor input power + fan input power)
(3) ESEER based upon unit operating at 12 / 7 °C return / supply temperature, 35°C ambient.
(4) Nominal Free Cooling output at 16/10°C return/supply temperatures, 2°C ambient, 20% ethylene glycol.
(5) Ambient temperature that maximum nominal DX duty can be achieved using Free Cooling only.
(6) This is a nominal figure based on full compressor duty, actual turndown depends on both condensing and evaporating temperatures.
(7) Based on standard unit without options, machine weight includes refrigerant charge, operating weight includes refrigerant charge and water volume. For unit weights with waterside options fitted please contact Airedale.
(8) For minimum system water volume calculation, refer to Design Features & Information - Minimum System Water Volume Calculations.
(9) Height based on standard fan, for optional fan dimensions please contact Airedale

Technical Data

TCF23X12S-24, TCF23X14S-24, TCF23X16S-25, TCF23X18S-25

Electrical

			146	147	148	149
ELECTRICAL DATA			TCF23X12S-24	TCF23X14S-24	TCF23X16S-25	TCF23X18S-25
Unit Data						
Full Load Amps	(1)	A	482	490	497	505
Maximum Start Amps		A	337	345	352	360
Mains Supply		VAC	400V (±10%) 3PH 50Hz			
Recommended Mains Fuse Size		A	500	500	560	560
Max Mains Incoming Cable Size (Direct to 3 Phase Mains Isolator)		mm²	2x 300mm² (Torque >20Nm)			
Independent Permanent Supply Recommended Fuse Size		A	25	25	25	25
Independent Permanent Supply		VAC	230V 1PH 50Hz (±10%)			
Max Permanent Incoming Cable Size (Direct to Control Panel Isolator)		mm²	6mm² / 8 AWG			
Control Circuit		VAC	24 VAC & 230VAC (±10%)			
Evaporator						
Immersion Heater Rating		W	500 (2x 250)	500 (2x 250)	500 (2x 250)	500 (2x 250)
External Trace Heating						
Available (fitted by others)		W	500	500	500	500
Condenser Fan - Per Fan (EC)						
Quantity			12	14	16	18
Full Load Amps		A	3.9	3.9	3.9	3.9
Locked Rotor Amps		A	N/A	N/A	N/A	N/A
Motor Rating		kW	2.56	2.56	2.56	2.56
Compressor - Per Compressor						
Nominal Run Amps		A	145	145	145	145
Quantity			3	3	3	3
Motor Rating		kW	87	87	87	87
Start Amps		A	2	2	2	2
Type Of Start			Electronic Soft Start			

(1) Based at full load Conditions and EC Fans
Pump electrical data is avaliable from Airedale upon request.

Technical Data

TCF23X18L-28, TCF23X20L-28, TCF23X22L-28, TCF23X24L-28

Mechanical

			150	151	152	153
Mechanical Data	Notes	Units	TCF23X18L-28	TCF23X20L-28	TCF23X22L-28	TCF23X24L-28
Cooling Duty - AC Fans	(1)	kW	820	900	915	1020
Nom Input -Cooling Only		kW	275	294	287	320
EER	(2)		2.98	3.06	3.18	3.18
ESEER	(3)		4.15	4.22	4.22	4.37
Nominal Output - Free Cooling	(4)	kW	668	740	795	873
Ambient when Free Cooling = 100% Nominal DX	(5)	°C	-1.2	-1.0	-0.1	-0.4
Capacity Steps	(6)	%	10-100%	10-100%	10-100%	10-100%
Dimensions (H x W x L)	(9)	mm	2800 x 2200 x 10550	2800 x 2200 x 11682	2800 x 2200 x 12814	2800 x 2200 x 13946
Machine Weight	(7)	kg	12310	13510	14350	15280
Operating Weight	(7)	kg	13720	15170	16100	17160
Construction Material			Base: Plain Galvanised Steel, Panels: Galvanised Sheet Steel, Epoxy Baked Powder Paint, Light Grey (RAL 7035)			
Evaporator - Type			Flooded - Shell and Tube Evaporator			
Insulation			Class O, UV stable Insulation			
Total Max. Water Flow		l/s	108.5	108.5	108.5	108.5
Total Min. Water Flow		l/s	36.2	36.2	36.2	36.2
Condenser - Type			Epoxy Coated Aluminium Microchannel & Aluminium Fins			
Face Area Total		m²	42.6	47.4	52.1	56.8
Maximum Airflow - EC Fans		m³/s	70.0	77.7	85.5	93.3
Condenser Fan & Motor			Sickle Bladed Axial Fan			
Quantity			18	20	22	24
Diameter		mm	800	800	800	800
Maximum Speed - EC Fans		rpm	715	715	715	715
Compressor - Type			Turbocor - Oil Free Compressor			
Quantity			3	3	3	3
Capacity Control			Variable Frequency Drive (VFD) for Linear Capacity Modulation			
Refrigeration			Dual Circuit	Dual Circuit	Dual Circuit	Dual Circuit
Refrigerant Pre-charged/ GWP			R134a / 1430			
Charge (Total) CCT1 + CCT2		kg	445 + 225	460 + 230	470 + 230	475 + 245
GWP Tonnes Equivalent CO_2			636.35 + 321.75	657.8 + 328.9	672.1 + 328.9	679.25 + 350.35
Refrigeration Control			Electronic Expansion Valve (EEV)			
Water System			Grooved Type Coupling and Pipe Assembly			
Water Inlet / Outlet			DN200	DN200	DN200	DN200
Water Drain / Bleed - Evap		inch	1/2	1/2	1/2	0.5
Water Volume		l	1919	2204	2332	2500
Minimum System Water Volume	(8)	l	4199	4449	4539	4669
Max System Operating Pressure		Barg	10	10	10	10
Flow Rate		l/s	35.3	37.8	40.4	42.9
Pressure Drop		kPa	62.7	67.0	71.6	76.8

(1) Based on FC units performance at 16/10°C return/supply temperatures, 35°C ambient, 20% ethylene glycol. All performance data is supplied in accordance with BS EN 14511-1:2013
(2) EER = DX cooling output / (compressor input power + fan input power)
(3) ESEER based upon unit operating at 12 / 7 °C return / supply temperature, 35°C ambient.
(4) Nominal Free Cooling output at 16/10°C return/supply temperatures, 2°C ambient, 20% ethylene glycol.
(5) Ambient temperature that maximum nominal DX duty can be achieved using Free Cooling only.
(6) This is a nominal figure based on full compressor duty, actual turndown depends on both condensing and evaporating temperatures.
(7) Based on standard unit without options, machine weight includes refrigerant charge, operating weight includes refrigerant charge and water volume. For unit weights with waterside options fitted please contact Airedale.
(8) For minimum system water volume calculation, refer to Design Features & Information - Minimum System Water Volume Calculations.
(9) Height based on standard fan, for optional fan dimensions please contact Airedale

Technical Data

TCF23X18L-28, TCF23X20L-28, TCF23X22L-28, TCF23X24L-28

Electrical

			150	151	152	153
ELECTRICAL DATA			TCF23X18L-28	TCF23X20L-28	TCF23X22L-28	TCF23X24L-28
Unit Data						
Full Load Amps	**(1)**	A	700	708	716	724
Maximum Start Amps		A	490	498	506	514
Mains Supply		VAC	400V (±10%) 3PH 50Hz			
Recommended Mains Fuse Size		A	710	710	710	1000
Max Mains Incoming Cable Size (Direct to 3 Phase Mains Isolator)		mm²	2x 300mm² (Torque >20Nm)			
Independent Permanent Supply Recommended Fuse Size		A	25	25	25	25
Independent Permanent Supply		VAC	230V 1PH 50Hz (±10%)			
Max Permanent Incoming Cable Size (Direct to Control Panel Isolator)		mm²	6mm² / 8 AWG			
Control Circuit		VAC	24 VAC & 230VAC (±10%)			
Evaporator						
Immersion Heater Rating		W	500 (2x 250)	500 (2x 250)	500 (2x 250)	500 (2x 250)
External Trace Heating						
Available (fitted by others)		W	500	500	500	500
Condenser Fan - Per Fan (EC)						
Quantity			18	20	22	24
Full Load Amps		A	3.9	3.9	3.9	3.9
Locked Rotor Amps		A	N/A	N/A	N/A	N/A
Motor Rating		kW	2.56	2.56	2.56	2.56
Compressor - Per Compressor			N/A	N/A	N/A	N/A
Nominal Run Amps		A	210	210	210	210
Quantity			3	3	3	3
Motor Rating		kW	129	129	129	129
Start Amps		A	2	2	2	2
Type Of Start			Electronic Soft Start			

(1) Based at full load Conditions and EC Fans
Pump electrical data is avaliable from Airedale upon request.

Technical Data

TCF24X16S-26, TCF24X18S-26, TCF24X20S-26

Mechanical

			154	155	156
Mechanical Data	Notes	Units	TCF24X16S-26	TCF24X18S-26	TCF24X20S-26
Cooling Duty - AC Fans	(1)	kW	750	820	860
Nom Input -Cooling Only		kW	242	252	258
EER	(2)		3.10	3.26	3.34
ESEER	(3)		4.49	4.66	4.65
Nominal Output - Free Cooling	(4)	kW	271	668	730
Ambient when Free Cooling = 100% Nominal DX	(5)	°C	-1.5	-1.2	-0.5
Capacity Steps	(6)	%	7.5-100%	7.5-100%	7.5-100%
Dimensions (H x W x L)	(9)	mm	2800 x 2200 x 9418	2800 x 2200 x 10550	2800 x 2200 x 11682
Machine Weight	(7)	kg	11900	12590	13780
Operating Weight	(7)	kg	13210	14040	15390
Construction Material			Base: Plain Galvanised Steel, Panels: Galvanised Sheet Steel, Epoxy Baked Powder Paint, Light Grey (RAL 7035)		
Evaporator - Type			Flooded - Shell and Tube Evaporator		
Insulation			Class O, UV stable Insulation		
Total Max. Water Flow		l/s	99.7	99.7	99.7
Total Min. Water Flow		l/s	33.2	33.2	33.2
Condenser - Type			Epoxy Coated Aluminium Microchannel & Aluminium Fins		
Face Area Total		m²	37.9	42.6	47.4
Maximum Airflow - EC Fans		m³/s	62.2	70.0	77.7
Condenser Fan & Motor			Sickle Bladed Axial Fan		
Quantity			16	18	20
Diameter		mm	800	800	800
Maximum Speed - EC Fans		rpm	715	715	715
Compressor - Type			Turbocor - Oil Free Compressor		
Quantity			4	4	4
Capacity Control			Variable Frequency Drive (VFD) for Linear Capacity Modulation		
Refrigeration			Dual Circuit	Dual Circuit	Dual Circuit
Refrigerant Pre-charged/ GWP			R134a / 1430		
Charge (Total) CCT1 + CCT2		kg	350 + 345	360 + 350	365 + 365
GWP Tonnes Equivalent CO_2			500.5 + 493.35	514.8 + 500.5	521.95 + 521.95
Refrigeration Control			Electronic Expansion Valve (EEV)		
Water System			Grooved Type Coupling and Pipe Assembly		
Water Inlet / Outlet			DN200	DN200	DN200
Water Drain / Bleed - Evap		inch	1/2	1/2	1/2
Water Volume		l	1785	1954	2160
Minimum System Water Volume	(8)	l	3243	3383	3553
Max System Operating Pressure		Barg	10	10	10
Flow Rate		l/s	33.2	34.5	36.2
Pressure Drop		kPa	62.8	62.5	64.3

(1) Based on FC units performance at 16/10°C return/supply temperatures, 35°C ambient, 20% ethylene glycol. All performance data is supplied in accordance with BS EN 14511-1:2013
(2) EER = DX cooling output / (compressor input power + fan input power)
(3) ESEER based upon unit operating at 12 / 7 °C return / supply temperature, 35°C ambient.
(4) Nominal Free Cooling output at 16/10°C return/supply temperatures, 2°C ambient, 20% ethylene glycol.
(5) Ambient temperature that maximum nominal DX duty can be achieved using Free Cooling only.
(6) This is a nominal figure based on full compressor duty, actual turndown depends on both condensing and evaporating temperatures.
(7) Based on standard unit without options, machine weight includes refrigerant charge, operating weight includes refrigerant charge and water volume. For unit weights with waterside options fitted please contact Airedale.
(8) For minimum system water volume calculation, refer to Design Features & Information - Minimum System Water Volume Calculations.
(9) Height based on standard fan, for optional fan dimensions please contact Airedale

Technical Data

TCF24X16S-26, TCF24X18S-26, TCF24X20S-26

Electrical

			154	155	156
ELECTRICAL DATA			TCF24X16S-26	TCF24X18S-26	TCF24X20S-26
Unit Data					
Full Load Amps	(1)	A	642	650	658
Maximum Start Amps		A	497	505	513
Mains Supply		VAC	400V (±10%) 3PH 50Hz		
Recommended Mains Fuse Size		A	670	670	670
Max Mains Incoming Cable Size (Direct to 3 Phase Mains Isolator)		mm²	2x 300mm² (Torque >20Nm)		
Independent Permanent Supply Recommended Fuse Size		A	25	25	25
Independent Permanent Supply		VAC	230V 1PH 50Hz (±10%)		
Max Permanent Incoming Cable Size (Direct to Control Panel Isolator)		mm²	6mm² / 8 AWG		
Control Circuit		VAC	24 VAC & 230VAC (±10%)		
Evaporator					
Immersion Heater Rating		W	500 (2x 250)		
External Trace Heating					
Available (fitted by others)		W	500	500	500
Condenser Fan - Per Fan (EC)					
Quantity			16	18	20
Full Load Amps		A	3.9	3.9	3.9
Locked Rotor Amps		A	N/A	N/A	N/A
Motor Rating		kW	2.56	2.56	2.56
Compressor - Per Compressor					
Nominal Run Amps		A	145	145	145
Quantity			4	4	4
Motor Rating		kW	87	87	87
Start Amps		A	2	2	2
Type Of Start			Electronic Soft Start		

(1) Based at full load Conditions and EC Fans
Pump electrical data is avaliable from Airedale upon request.

Technical Data

TCF24X22S-27, TCF24X24S-27, TCF24X22L-21, TCF24X24L-21

Mechanical

			157	158	159	160
Mechanical Data	Notes	Units	TCF24X22S-27	TCF24X24S-27	TCF24X22L-21	TCF24X24L-21
Cooling Duty - AC Fans	(1)	kW	910	960	1040	1080
Nom Input -Cooling Only		kW	268	280	367	373
EER	(2)		3.39	3.43	2.83	2.90
ESEER	(3)		4.66	4.67	4.40	4.43
Nominal Output - Free Cooling	(4)	kW	793	856	826	888
Ambient when Free Cooling = 100% Nominal DX	(5)	°C	-0.1	0.3	-1.6	-1.0
Capacity Steps	(6)	%	7.5-100%	7.5-100%	7.5-100%	7.5-100%
Dimensions (H x W x L)	(9)	mm	2800 x 2200 x 12814	2800 x 2200 x 13946	2800 x 2200 x 12814	2800 x 2200 x 13946
Machine Weight	(7)	kg	14590	15570	14800	15800
Operating Weight	(7)	kg	16310	17490	16530	17730
Construction Material			Base: Plain Galvanised Steel, Panels: Galvanised Sheet Steel, Epoxy Baked Powder Paint, Light Grey (RAL 7035)			
Evaporator - Type			Flooded - Shell and Tube Evaporator			
Insulation			Class O, UV stable Insulation			
Total Max. Water Flow		l/s	104.2	104.2	108.5	108.5
Total Min. Water Flow		l/s	34.6	34.6	36.2	36.2
Condenser - Type			Epoxy Coated Aluminium Microchannel & Aluminium Fins			
Face Area Total		m²	52.1	56.8	52.1	56.8
Maximum Airflow - EC Fans		m³/s	85.5	93.3	85.5	93.3
Condenser Fan & Motor			Sickle Bladed Axial Fan			
Quantity			22	24	22	24
Diameter		mm	800	800	800	800
Maximum Speed - EC Fans		rpm	715	715	715	715
Compressor - Type			Turbocor - Oil Free Compressor			
Quantity			4	4	4	4
Capacity Control			Variable Frequency Drive (VFD) for Linear Capacity Modulation			
Refrigeration			Dual Circuit	Dual Circuit	Dual Circuit	Dual Circuit
Refrigerant Pre-charged/ GWP			R134a / 1430			
Charge (Total) CCT1 + CCT2		kg	360 + 365	375 + 370	365 + 370	380 + 380
GWP Tonnes Equivalent CO_2			514.8 + 521.95	536.25 + 529.1	521.95 + 529.1	543.4 + 543.4
Refrigeration Control			Electronic Expansion Valve (EEV)			
Water System			Grooved Type Coupling and Pipe Assembly			
Water Inlet / Outlet			DN200	DN200	DN200	DN200
Water Drain / Bleed - Evap		inch	1/2	1/2	1/2	0.5
Water Volume		l	2298	2544	2309	2554
Minimum System Water Volume	(8)	l	3653	3863	4519	4729
Max System Operating Pressure		Barg	10	10	10	10
Flow Rate		l/s	38.3	40.4	43.7	45.4
Pressure Drop		kPa	66.2	70.3	82.1	84.8

(1) Based on FC units performance at 16/10°C return/supply temperatures, 35°C ambient, 20% ethylene glycol. All performance data is supplied in accordance with BS EN 14511-1:2013
(2) EER = DX cooling output / (compressor input power + fan input power)
(3) ESEER based upon unit operating at 12 / 7 °C return / supply temperature, 35°C ambient.
(4) Nominal Free Cooling output at 16/10°C return/supply temperatures, 2°C ambient, 20% ethylene glycol.
(5) Ambient temperature that maximum nominal DX duty can be achieved using Free Cooling only.
(6) This is a nominal figure based on full compressor duty, actual turndown depends on both condensing and evaporating temperatures.
(7) Based on standard unit without options, machine weight includes refrigerant charge, operating weight includes refrigerant charge and water volume. For unit weights with waterside options fitted please contact Airedale.
(8) For minimum system water volume calculation, refer to Design Features & Information - Minimum System Water Volume Calculations.
(9) Height based on standard fan, for optional fan dimensions please contact Airedale

Technical Data

TCF24X22S-27, TCF24X24S-27, TCF24X22L-21, TCF24X24L-21

Electrical

			157	158	159	160
ELECTRICAL DATA			TCF24X22S-27	TCF24X24S-27	TCF24X22L-21	TCF24X24L-21
Unit Data						
Full Load Amps	(1)	A	666	674	926	934
Maximum Start Amps		A	521	529	716	724
Mains Supply		VAC	400V (±10%) 3PH 50Hz			
Recommended Mains Fuse Size		A	710	710	1000	1000
Max Mains Incoming Cable Size (Direct to 3 Phase Mains Isolator)		mm²	2x 300mm² (Torque >20Nm)			
Independent Permanent Supply Recommended Fuse Size		A	25	25	25	25
Independent Permanent Supply		VAC	230V 1PH 50Hz (±10%)			
Max Permanent Incoming Cable Size (Direct to Control Panel Isolator)		mm²	6mm² / 8 AWG			
Control Circuit		VAC	24 VAC & 230VAC (±10%)			
Evaporator						
Immersion Heater Rating		W	500 (2x 250)			
External Trace Heating						
Available (fitted by others)		W	500	500	500	500
Condenser Fan - Per Fan (EC)						
Quantity			22	24	22	24
Full Load Amps		A	3.9	3.9	3.9	3.9
Locked Rotor Amps		A	N/A	N/A	N/A	N/A
Motor Rating		kW	2.56	2.56	2.56	2.56
Compressor - Per Compressor						
Nominal Run Amps		A	145	145	210	210
Quantity			4	4	4	4
Motor Rating		kW	87	87	129	129
Start Amps		A	2	2	2	2
Type Of Start			Electronic Soft Start			

(1) Based at full load Conditions and EC Fans
Pump electrical data is avaliable from Airedale upon request.

Sound Data - TCF

TCF - EC Fans

		EC								
		Single Octave Sound Levels (dB)								
		63 Hz	125 Hz	250 Hz	500 Hz	1000 Hz	2000 Hz	4000 Hz	8000	Overall [dB(A)]
TCF11R06S-07	Sound Power	85	84	83	79	80	76	81	83	87
	Sound Pressure @10m	52	51	51	47	48	44	49	51	55
TCF11R08S-07	Sound Power	82	82	82	78	79	75	81	83	87
	Sound Pressure @10m	50	49	49	46	46	43	48	50	54
TCF11R06L-11	Sound Power	92	89	87	84	85	81	80	81	90
	Sound Pressure @10m	60	57	55	52	53	48	48	49	57
TCF11R08L-08	Sound Power	92	89	88	84	86	81	80	81	90
	Sound Pressure @10m	59	57	55	52	53	48	48	49	57
TCF11R10L-10	Sound Power	87	86	86	82	84	78	80	81	89
	Sound Pressure @10m	55	54	53	49	52	46	47	49	56
TCF12R08S-09	Sound Power	91	89	88	84	85	80	84	86	91
	Sound Pressure @10m	59	56	55	51	52	48	52	53	59
TCF12R10S-05	Sound Power	88	87	86	82	83	79	84	86	90
	Sound Pressure @10m	56	54	54	50	51	46	51	53	58
TCF12R12S-05	Sound Power	86	86	86	82	82	79	84	86	90
	Sound Pressure @10m	54	53	53	49	50	46	51	53	57
TCF12R14S-05	Sound Power	85	85	85	81	82	78	84	86	90
	Sound Pressure @10m	52	52	52	48	49	45	51	53	57
TCF12R12L-12	Sound Power	93	90	89	86	88	82	83	84	92
	Sound Pressure @10m	60	58	56	53	55	50	50	52	59
TCF12R14L-12	Sound Power	92	90	89	86	88	82	83	84	92
	Sound Pressure @10m	59	57	56	53	55	49	50	51	59
TCF12R16L-12	Sound Power	91	90	89	85	87	82	83	84	92
	Sound Pressure @10m	58	57	56	52	54	49	50	51	59
TCF12R18L-13	Sound Power	91	90	89	85	87	82	83	84	92
	Sound Pressure @10m	58	57	56	52	54	49	50	51	59
TCF12R20L-13	Sound Power	91	89	89	85	87	81	83	84	92
	Sound Pressure @10m	57	56	55	52	54	48	50	51	58
TCF22R10S-22	Sound Power	88	87	86	82	83	79	84	86	90
	Sound Pressure @10m	55	54	54	50	51	46	51	53	58
TCF22R12S-22	Sound Power	86	86	86	82	82	79	84	86	90
	Sound Pressure @10m	54	53	53	49	50	46	51	53	57

(1) dB(A) is the overall sound level, measured on the A scale.
(2) All sound data measured at nominal conditions: Water in/out 16/10°C at 35°C ambient.
(3) Based on unit with a 300mm plenum, for units fitted with optional extras, please contact Airedale.

Sound Data - TCF

TCF - EC Fans

		EC								
		Single Octave Sound Levels (dB)								
		63 Hz	125 Hz	250 Hz	500 Hz	1000 Hz	2000 Hz	4000 Hz	8000	Overall [dB(A)]
TCF22R14S-22	Sound Power	85	85	85	81	82	78	84	86	90
	Sound Pressure @10m	52	52	52	48	49	45	51	53	57
TCF22R12L-23	Sound Power	92	90	89	85	87	82	83	84	92
	Sound Pressure @10m	59	57	56	53	55	49	50	52	59
TCF22R14L-23	Sound Power	91	89	88	85	87	82	83	84	92
	Sound Pressure @10m	58	57	56	52	54	49	50	51	59
TCF22R16L-23	Sound Power	90	89	88	85	87	81	83	84	91
	Sound Pressure @10m	57	56	55	52	54	48	50	51	58
TCF22R18L-23	Sound Power	91	89	89	85	87	81	83	84	92
	Sound Pressure @10m	58	56	56	52	54	48	50	51	58
TCF22R20L-23	Sound Power	90	89	88	85	87	81	83	84	91
	Sound Pressure @10m	57	56	55	52	54	48	50	51	58
TCF23R12S-24	Sound Power	91	89	88	84	85	81	86	88	92
	Sound Pressure @10m	58	56	56	52	53	48	53	55	60
TCF23R14S-24	Sound Power	90	88	88	84	85	81	86	88	92
	Sound Pressure @10m	57	56	55	51	52	48	53	55	59
TCF23R16S-25	Sound Power	89	88	87	84	84	80	86	88	92
	Sound Pressure @10m	56	55	55	51	51	47	53	55	59
TCF23R18S-25	Sound Power	88	87	87	83	84	80	86	88	92
	Sound Pressure @10m	55	54	54	50	51	47	53	55	59
TCF23R18L-28	Sound Power	93	91	90	87	89	83	85	86	93
	Sound Pressure @10m	60	58	57	54	56	50	51	53	60
TCF23R20L-28	Sound Power	92	90	90	86	89	83	85	86	93
	Sound Pressure @10m	59	57	56	53	55	50	51	53	60
TCF23R22L-28	Sound Power	91	90	89	86	88	83	84	86	93
	Sound Pressure @10m	58	57	56	53	55	50	51	53	60
TCF23R24L-28	Sound Power	91	90	89	86	88	83	84	86	93
	Sound Pressure @10m	58	56	56	53	55	49	51	53	59

(1) dB(A) is the overall sound level, measured on the A scale.
(2) All sound data measured at nominal conditions: Water in/out 16/10°C at 35°C ambient.
(3) Based on unit with a 300mm plenum, for units fitted with optional extras, please contact Airedale.

Sound Data - TCF

TCF - EC Fans

		EC								
		Single Octave Sound Levels (dB)								
		63 Hz	125 Hz	250 Hz	500 Hz	1000 Hz	2000 Hz	4000 Hz	8000	Overall [dB(A)]
TCF24R16S-26	Sound Power	92	90	89	86	86	82	87	89	93
	Sound Pressure @10m	59	57	56	53	53	49	54	56	60
TCF24R18S-26	Sound Power	91	89	89	85	86	82	87	89	93
	Sound Pressure @10m	58	56	56	52	53	49	54	56	60
TCF24R20S-26	Sound Power	90	89	89	85	86	82	87	89	93
	Sound Pressure @10m	57	56	55	52	52	48	54	56	60
TCF24R22S-27	Sound Power	89	88	88	85	85	81	87	89	93
	Sound Pressure @10m	56	55	55	51	52	48	54	56	60
TCF24R24S-27	Sound Power	89	88	88	84	85	81	87	89	93
	Sound Pressure @10m	55	55	55	51	52	48	53	55	60
TCF24R22L-21	Sound Power	94	92	91	88	90	85	86	87	95
	Sound Pressure @10m	61	59	58	55	57	51	53	54	61
TCF24R24L-21	Sound Power	93	92	91	88	90	84	86	87	94
	Sound Pressure @10m	60	58	57	54	56	51	52	54	61
TCF11X06S-07	Sound Power	84	83	80	77	78	75	81	83	87
	Sound Pressure @10m	51	50	48	45	45	42	49	51	54
TCF11X08S-07	Sound Power	85	84	81	78	78	75	81	83	87
	Sound Pressure @10m	52	51	49	46	46	42	48	50	54
TCF11X06L-11	Sound Power	84	83	79	79	82	77	80	81	87
	Sound Pressure @10m	51	50	47	47	50	45	47	49	55
TCF11X08L-08	Sound Power	85	84	81	79	82	77	80	81	87
	Sound Pressure @10m	52	51	48	47	50	45	47	49	55
TCF11X10L-10	Sound Power	86	85	82	80	82	77	80	81	87
	Sound Pressure @10m	53	52	49	47	50	44	47	49	55

(1) dB(A) is the overall sound level, measured on the A scale.
(2) All sound data measured at nominal conditions: Water in/out 16/10°C at 35°C ambient.
(3) Based on unit with a 300mm plenum, for units fitted with optional extras, please contact Airedale.

Sound Data - TCF

TCF - EC Fans

		EC								
		Single Octave Sound Levels (dB)								
		63 Hz	125 Hz	250 Hz	500 Hz	1000 Hz	2000 Hz	4000 Hz	8000	Overall [dB(A)]
TCF12X08S-09	Sound Power	85	84	82	80	80	78	84	86	89
	Sound Pressure @10m	52	52	49	47	48	45	51	53	57
TCF12X10S-05	Sound Power	86	85	82	80	80	78	84	86	89
	Sound Pressure @10m	53	52	50	47	48	45	51	53	57
TCF12X12S-05	Sound Power	87	86	83	80	81	78	84	86	90
	Sound Pressure @10m	54	53	50	48	48	45	51	53	57
TCF12X14S-05	Sound Power	87	86	84	81	81	78	84	86	90
	Sound Pressure @10m	54	54	51	48	48	45	51	53	57
TCF12X12L-12	Sound Power	87	86	82	82	85	80	83	84	90
	Sound Pressure @10m	54	53	50	49	52	47	50	52	57
TCF12X14L-12	Sound Power	87	86	83	82	85	80	83	84	90
	Sound Pressure @10m	54	53	50	49	52	47	50	51	57
TCF12X16L-12	Sound Power	88	87	84	82	85	80	83	84	90
	Sound Pressure @10m	55	54	51	49	52	47	50	51	57
TCF12X18L-13	Sound Power	88	87	84	83	85	80	83	84	90
	Sound Pressure @10m	55	54	51	50	52	47	50	51	57
TCF12X20L-13	Sound Power	89	88	85	83	85	80	83	84	90
	Sound Pressure @10m	56	55	51	50	52	47	49	51	57
TCF22X10S-22	Sound Power	86	85	82	80	80	78	84	86	89
	Sound Pressure @10m	53	52	50	47	48	45	51	53	57
TCF22X12S-22	Sound Power	87	86	83	80	81	78	84	86	90
	Sound Pressure @10m	54	53	50	48	48	45	51	53	57
TCF22X14S-22	Sound Power	87	86	84	81	81	78	84	86	90
	Sound Pressure @10m	54	54	51	48	48	45	51	53	57
TCF22X12L-23	Sound Power	87	86	82	82	85	80	83	84	90
	Sound Pressure @10m	54	53	50	49	52	47	50	52	57
TCF22X14L-23	Sound Power	87	86	83	82	85	80	83	84	90
	Sound Pressure @10m	54	53	50	49	52	47	50	51	57
TCF22X16L-23	Sound Power	88	87	84	82	85	80	83	84	90
	Sound Pressure @10m	55	54	51	49	52	47	50	51	57
TCF22X18L-23	Sound Power	88	87	84	83	85	80	83	84	90
	Sound Pressure @10m	55	54	51	50	52	47	50	51	57

(1) dB(A) is the overall sound level, measured on the A scale.
(2) All sound data measured at nominal conditions: Water in/out 16/10°C at 35°C ambient.
(3) Based on unit with a 300mm plenum, for units fitted with optional extras, please contact Airedale.

Sound Data - TCF

TCF - EC Fans

		EC								
		Single Octave Sound Levels (dB)								
		63 Hz	125 Hz	250 Hz	500 Hz	1000 Hz	2000 Hz	4000 Hz	8000	Overall [dB(A)]
TCF22X20L-23	Sound Power	89	88	85	83	85	80	83	84	90
	Sound Pressure @10m	56	55	51	50	52	47	49	51	57
TCF23X12S-24	Sound Power	87	86	83	81	82	79	86	88	91
	Sound Pressure @10m	54	53	51	49	49	47	53	55	58
TCF23X14S-24	Sound Power	87	86	84	82	82	79	86	88	91
	Sound Pressure @10m	54	54	51	49	49	47	53	55	58
TCF23X16S-25	Sound Power	88	87	84	82	82	79	86	88	91
	Sound Pressure @10m	55	54	52	49	49	47	53	55	58
TCF23X18S-25	Sound Power	88	87	85	82	82	80	86	88	91
	Sound Pressure @10m	55	54	52	49	49	46	53	55	58
TCF23X18L-28	Sound Power	88	87	84	84	87	82	84	86	92
	Sound Pressure @10m	55	54	51	51	54	49	51	53	59
TCF23X20L-28	Sound Power	89	88	85	84	87	82	84	86	92
	Sound Pressure @10m	56	55	51	51	54	48	51	53	59
TCF23X22L-28	Sound Power	89	88	85	84	87	82	84	86	92
	Sound Pressure @10m	56	55	52	51	53	48	51	53	58
TCF23X24L-28	Sound Power	90	89	85	84	87	82	84	86	92
	Sound Pressure @10m	56	55	52	51	53	48	51	53	58
TCF24X16S-26	Sound Power	70	70	79	80	82	80	87	89	92
	Sound Pressure @10m	37	37	46	47	49	47	54	56	59
TCF24X18S-26	Sound Power	88	87	85	83	83	81	87	89	92
	Sound Pressure @10m	55	54	52	50	50	48	54	56	59
TCF24X20S-26	Sound Power	89	88	85	83	83	81	87	89	92
	Sound Pressure @10m	56	55	52	50	50	47	54	56	59
TCF24X22S-27	Sound Power	89	88	86	83	83	81	87	89	92
	Sound Pressure @10m	56	55	53	50	50	47	54	56	59
TCF24X24S-27	Sound Power	90	89	86	83	84	81	87	89	93
	Sound Pressure @10m	56	55	53	50	50	47	53	55	59
TCF24X22L-21	Sound Power	89	88	85	85	88	83	86	87	93
	Sound Pressure @10m	56	55	52	51	55	50	52	54	60
TCF24X24L-21	Sound Power	90	89	85	85	88	83	86	87	93
	Sound Pressure @10m	56	55	52	51	54	49	52	54	60

(1) dB(A) is the overall sound level, measured on the A scale.
(2) All sound data measured at nominal conditions: Water in/out 16/10°C at 35°C ambient.
(3) Based on unit with a 300mm plenum, for units fitted with optional extras, please contact Airedale.

Hydronic Data

TCC Waterside Pressure Drop kPa (100% Water)

	Water flow rate l/s																																	
	8	10	12	14	16	18	20	22	24	26	28	30	32	34	36	38	40	42	44	46	48	50	52	54	56	58	60	62	64	66	68	70	72	74
TCC11R04S-01	20	28	39	51	64	79	96	-	-	-	-	-	-	-	-	-	-	-	-	-	-	-	-	-	-	-	-	-	-	-	-	-	-	-
TCC11R06S-01	20	28	39	51	64	79	96	-	-	-	-	-	-	-	-	-	-	-	-	-	-	-	-	-	-	-	-	-	-	-	-	-	-	-
TCC11R08S-01	20	28	39	51	64	79	96	-	-	-	-	-	-	-	-	-	-	-	-	-	-	-	-	-	-	-	-	-	-	-	-	-	-	-
TCC11R06L-02	-	-	-	-	-	12	15	18	21	25	29	33	37	42	47	53	59	65	71	78	85	92	-	-	-	-	-	-	-	-	-	-	-	-
TCC11R08L-03	-	17	23	30	38	46	56	66	77	89	-	-	-	-	-	-	-	-	-	-	-	-	-	-	-	-	-	-	-	-	-	-	-	-
TCC11R10L-03	-	17	23	30	38	46	56	66	77	89	-	-	-	-	-	-	-	-	-	-	-	-	-	-	-	-	-	-	-	-	-	-	-	-
TCC12R08S-04	-	-	-	16	20	24	29	34	40	46	52	59	66	74	82	90	99	-	-	-	-	-	-	-	-	-	-	-	-	-	-	-	-	-
TCC12R10S-04	-	-	-	16	20	24	29	34	40	46	52	59	66	74	82	90	99	-	-	-	-	-	-	-	-	-	-	-	-	-	-	-	-	-
TCC12R12S-04	-	-	-	16	20	24	29	34	40	46	52	59	66	74	82	90	99	-	-	-	-	-	-	-	-	-	-	-	-	-	-	-	-	-
TCC12R14S-04	-	-	-	16	20	24	29	34	40	46	52	59	66	74	82	90	99	-	-	-	-	-	-	-	-	-	-	-	-	-	-	-	-	-
TCC12R10L-05	-	-	-	-	-	17	21	24	28	32	36	41	46	51	57	62	68	75	81	88	95	103	-	-	-	-	-	-	-	-	-	-	-	-
TCC12R12L-06	-	-	-	-	-	-	15	18	21	24	27	31	35	38	43	47	51	56	61	66	72	77	83	89	95	101	-	-	-	-	-	-	-	-
TCC12R14L-06	-	-	-	-	-	-	15	18	21	24	27	31	35	38	43	47	51	56	61	66	72	77	83	89	95	101	-	-	-	-	-	-	-	-
TCC12R16L-06	-	-	-	-	-	-	15	18	21	24	27	31	35	38	43	47	51	56	61	66	72	77	83	89	95	101	-	-	-	-	-	-	-	-
TCC12R18L-06	-	-	-	-	-	-	15	18	21	24	27	31	35	38	43	47	51	56	61	66	72	77	83	89	95	101	-	-	-	-	-	-	-	-
TCC12R20L-06	-	-	-	-	-	-	15	18	21	24	27	31	35	38	43	47	51	56	61	66	72	77	83	89	95	101	-	-	-	-	-	-	-	-
TCC22R08S-14	-	-	-	-	19	22	26	31	35	40	46	51	57	63	70	76	83	91	-	-	-	-	-	-	-	-	-	-	-	-	-	-	-	-
TCC22R10S-14	-	-	-	-	19	22	26	31	35	40	46	51	57	63	70	76	83	91	-	-	-	-	-	-	-	-	-	-	-	-	-	-	-	-
TCC22R12S-14	-	-	-	-	19	22	26	31	35	40	46	51	57	63	70	76	83	91	-	-	-	-	-	-	-	-	-	-	-	-	-	-	-	-
TCC22R14S-14	-	-	-	-	19	22	26	31	35	40	46	51	57	63	70	76	83	91	-	-	-	-	-	-	-	-	-	-	-	-	-	-	-	-
TCC22R10L-15	-	-	-	-	-	-	16	18	21	24	27	30	34	38	42	46	50	55	59	64	69	74	80	85	91	97	-	-	-	-	-	-	-	-
TCC22R12L-15	-	-	-	-	-	-	16	18	21	24	27	30	34	38	42	46	50	55	59	64	69	74	80	85	91	97	-	-	-	-	-	-	-	-
TCC22R14L-15	-	-	-	-	-	-	16	18	21	24	27	30	34	38	42	46	50	55	59	64	69	74	80	85	91	97	-	-	-	-	-	-	-	-
TCC22R16L-16	-	-	-	-	-	-	-	16	19	21	24	27	30	34	37	41	45	49	53	58	62	67	72	77	82	87	93	99	-	-	-	-	-	-
TCC22R18L-16	-	-	-	-	-	-	-	16	19	21	24	27	30	34	37	41	45	49	53	58	62	67	72	77	82	87	93	99	-	-	-	-	-	-
TCC22R20L-16	-	-	-	-	-	-	-	16	19	21	24	27	30	34	37	41	45	49	53	58	62	67	72	77	82	87	93	99	-	-	-	-	-	-
TCC23R12S-17	-	-	-	-	-	-	-	-	17	19	22	25	27	31	34	37	41	44	48	52	56	61	65	70	75	79	85	90	95	101	-	-	-	-
TCC23R14S-17	-	-	-	-	-	-	-	-	17	19	22	25	27	31	34	37	41	44	48	52	56	61	65	70	75	79	85	90	95	101	-	-	-	-
TCC23R16S-17	-	-	-	-	-	-	-	-	17	19	22	25	27	31	34	37	41	44	48	52	56	61	65	70	75	79	85	90	95	101	-	-	-	-
TCC23R18S-17	-	-	-	-	-	-	-	-	17	19	22	25	27	31	34	37	41	44	48	52	56	61	65	70	75	79	85	90	95	101	-	-	-	-
TCC23R16L-19	-	-	-	-	-	-	-	-	-	-	-	15	17	19	21	23	25	28	30	33	35	38	41	44	47	50	53	56	60	63	67	71	74	78
TCC23R18L-19	-	-	-	-	-	-	-	-	-	-	-	15	17	19	21	23	25	28	30	33	35	38	41	44	47	50	53	56	60	63	67	71	74	78
TCC23R20L-20	-	-	-	-	-	-	-	-	-	-	-	-	16	17	19	21	23	25	27	30	32	35	37	40	43	46	49	52	55	58	61	65	68	72
TCC23R22L-20	-	-	-	-	-	-	-	-	-	-	-	-	16	17	19	21	23	25	27	30	32	35	37	40	43	46	49	52	55	58	61	65	68	72
TCC23R24L-20	-	-	-	-	-	-	-	-	-	-	-	-	16	17	19	21	23	25	27	30	32	35	37	40	43	46	49	52	55	58	61	65	68	72
TCC24R16S-18	-	-	-	-	-	-	-	-	-	14	16	18	21	23	25	28	30	33	36	39	42	45	48	52	55	59	63	67	71	75	79	83	88	92
TCC24R18S-18	-	-	-	-	-	-	-	-	-	14	16	18	21	23	25	28	30	33	36	39	42	45	48	52	55	59	63	67	71	75	79	83	88	92
TCC24R20S-18	-	-	-	-	-	-	-	-	-	14	16	18	21	23	25	28	30	33	36	39	42	45	48	52	55	59	63	67	71	75	79	83	88	92
TCC24R22S-18	-	-	-	-	-	-	-	-	-	14	16	18	21	23	25	28	30	33	36	39	42	45	48	52	55	59	63	67	71	75	79	83	88	92
TCC24R24S-18	-	-	-	-	-	-	-	-	-	14	16	18	21	23	25	28	30	33	36	39	42	45	48	52	55	59	63	67	71	75	79	83	88	92

Hydronic Data

TCC Waterside Pressure Drop kPa (100% Water)

	Water flow rate l/s																																	
	8	10	12	14	16	18	20	22	24	26	28	30	32	34	36	38	40	42	44	46	48	50	52	54	56	58	60	62	64	66	68	70	72	74
TCC24R20L-21	-	-	-	-	-	-	-	-	-	-	-	-	-	-	-	15	16	18	19	21	23	24	26	28	30	32	34	36	38	40	42	45	47	50
TCC24R22L-21	-	-	-	-	-	-	-	-	-	-	-	-	-	-	-	15	16	18	19	21	23	24	26	28	30	32	34	36	38	40	42	45	47	50
TCC24R24L-21	-	-	-	-	-	-	-	-	-	-	-	-	-	-	-	15	16	18	19	21	23	24	26	28	30	32	34	36	38	40	42	45	47	50
TCC11X04S-01	20	28	39	51	64	79	96	-	-	-	-	-	-	-	-	-	-	-	-	-	-	-	-	-	-	-	-	-	-	-	-	-	-	-
TCC11X06S-01	20	28	39	51	64	79	96	-	-	-	-	-	-	-	-	-	-	-	-	-	-	-	-	-	-	-	-	-	-	-	-	-	-	-
TCC11X08S-01	20	28	39	51	64	79	96	-	-	-	-	-	-	-	-	-	-	-	-	-	-	-	-	-	-	-	-	-	-	-	-	-	-	-
TCC11X06L-02	-	-	-	-	-	12	15	18	21	25	29	33	37	42	47	53	59	65	71	78	85	92	-	-	-	-	-	-	-	-	-	-	-	-
TCC11X08L-03	-	17	23	30	38	46	56	66	77	89	-	-	-	-	-	-	-	-	-	-	-	-	-	-	-	-	-	-	-	-	-	-	-	-
TCC11X10L-03	-	17	23	30	38	46	56	66	77	89	-	-	-	-	-	-	-	-	-	-	-	-	-	-	-	-	-	-	-	-	-	-	-	-
TCC12X08S-04	-	-	-	16	20	24	29	34	40	46	52	59	66	74	82	90	99	-	-	-	-	-	-	-	-	-	-	-	-	-	-	-	-	-
TCC12X10S-04	-	-	-	16	20	24	29	34	40	46	52	59	66	74	82	90	99	-	-	-	-	-	-	-	-	-	-	-	-	-	-	-	-	-
TCC12X12S-04	-	-	-	16	20	24	29	34	40	46	52	59	66	74	82	90	99	-	-	-	-	-	-	-	-	-	-	-	-	-	-	-	-	-
TCC12X14S-04	-	-	-	16	20	24	29	34	40	46	52	59	66	74	82	90	99	-	-	-	-	-	-	-	-	-	-	-	-	-	-	-	-	-
TCC12X10L-05	-	-	-	-	-	17	21	24	28	32	36	41	46	51	57	62	68	75	81	88	95	103	-	-	-	-	-	-	-	-	-	-	-	-
TCC12X12L-06	-	-	-	-	-	-	15	18	21	24	27	31	35	38	43	47	51	56	61	66	72	77	83	89	95	101	-	-	-	-	-	-	-	-
TCC12X14L-06	-	-	-	-	-	-	15	18	21	24	27	31	35	38	43	47	51	56	61	66	72	77	83	89	95	101	-	-	-	-	-	-	-	-
TCC12X16L-06	-	-	-	-	-	-	15	18	21	24	27	31	35	38	43	47	51	56	61	66	72	77	83	89	95	101	-	-	-	-	-	-	-	-
TCC12X18L-06	-	-	-	-	-	-	15	18	21	24	27	31	35	38	43	47	51	56	61	66	72	77	83	89	95	101	-	-	-	-	-	-	-	-
TCC12X20L-06	-	-	-	-	-	-	15	18	21	24	27	31	35	38	43	47	51	56	61	66	72	77	83	89	95	101	-	-	-	-	-	-	-	-
TCC22X08S-14	-	-	-	-	19	22	26	31	35	40	46	51	57	63	70	76	83	91	-	-	-	-	-	-	-	-	-	-	-	-	-	-	-	-
TCC22X10S-14	-	-	-	-	19	22	26	31	35	40	46	51	57	63	70	76	83	91	-	-	-	-	-	-	-	-	-	-	-	-	-	-	-	-
TCC22X12S-14	-	-	-	-	19	22	26	31	35	40	46	51	57	63	70	76	83	91	-	-	-	-	-	-	-	-	-	-	-	-	-	-	-	-
TCC22X14S-14	-	-	-	-	19	22	26	31	35	40	46	51	57	63	70	76	83	91	-	-	-	-	-	-	-	-	-	-	-	-	-	-	-	-
TCC22X10L-15	-	-	-	-	-	-	16	18	21	24	27	30	34	38	42	46	50	55	59	64	69	74	80	85	91	97	-	-	-	-	-	-	-	-
TCC22X12L-15	-	-	-	-	-	-	16	18	21	24	27	30	34	38	42	46	50	55	59	64	69	74	80	85	91	97	-	-	-	-	-	-	-	-
TCC22X14L-15	-	-	-	-	-	-	16	18	21	24	27	30	34	38	42	46	50	55	59	64	69	74	80	85	91	97	-	-	-	-	-	-	-	-
TCC22X16L-16	-	-	-	-	-	-	-	16	19	21	24	27	30	34	37	41	45	49	53	58	62	67	72	77	82	87	93	99	-	-	-	-	-	-
TCC22X18L-16	-	-	-	-	-	-	-	16	19	21	24	27	30	34	37	41	45	49	53	58	62	67	72	77	82	87	93	99	-	-	-	-	-	-
TCC22X20L-16	-	-	-	-	-	-	-	16	19	21	24	27	30	34	37	41	45	49	53	58	62	67	72	77	82	87	93	99	-	-	-	-	-	-
TCC23X12S-17	-	-	-	-	-	-	-	-	17	19	22	25	27	31	34	37	41	44	48	52	56	61	65	70	75	79	85	90	95	101	-	-	-	-
TCC23X14S-17	-	-	-	-	-	-	-	-	17	19	22	25	27	31	34	37	41	44	48	52	56	61	65	70	75	79	85	90	95	101	-	-	-	-
TCC23X16S-17	-	-	-	-	-	-	-	-	17	19	22	25	27	31	34	37	41	44	48	52	56	61	65	70	75	79	85	90	95	101	-	-	-	-
TCC23X18S-17	-	-	-	-	-	-	-	-	17	19	22	25	27	31	34	37	41	44	48	52	56	61	65	70	75	79	85	90	95	101	-	-	-	-
TCC23X16L-19	-	-	-	-	-	-	-	-	-	-	-	15	17	19	21	23	25	28	30	33	35	38	41	44	47	50	53	56	60	63	67	71	74	78
TCC23X18L-19	-	-	-	-	-	-	-	-	-	-	-	15	17	19	21	23	25	28	30	33	35	38	41	44	47	50	53	56	60	63	67	71	74	78

Hydronic Data

TCC Waterside Pressure Drop kPa (100% Water)

	Water flow rate l/s																																			
	8	10	12	14	16	18	20	22	24	26	28	30	32	34	36	38	40	42	44	46	48	50	52	54	56	58	60	62	64	66	68	70	72	74
TCC23X20L-20	-	-	-	-	-	-	-	-	-	-	-	-	16	17	19	21	23	25	27	30	32	35	37	40	43	46	49	52	55	58	61	65	68	72
TCC23X22L-20	-	-	-	-	-	-	-	-	-	-	-	-	16	17	19	21	23	25	27	30	32	35	37	40	43	46	49	52	55	58	61	65	68	72
TCC23X24L-20	-	-	-	-	-	-	-	-	-	-	-	-	16	17	19	21	23	25	27	30	32	35	37	40	43	46	49	52	55	58	61	65	68	72
TCC24X16S-18	-	-	-	-	-	-	-	-	-	14	16	18	21	23	25	28	30	33	36	39	42	45	48	52	55	59	63	67	71	75	79	83	88	92
TCC24X18S-18	-	-	-	-	-	-	-	-	-	14	16	18	21	23	25	28	30	33	36	39	42	45	48	52	55	59	63	67	71	75	79	83	88	92
TCC24X20S-18	-	-	-	-	-	-	-	-	-	14	16	18	21	23	25	28	30	33	36	39	42	45	48	52	55	59	63	67	71	75	79	83	88	92
TCC24X22S-18	-	-	-	-	-	-	-	-	-	14	16	18	21	23	25	28	30	33	36	39	42	45	48	52	55	59	63	67	71	75	79	83	88	92
TCC24X24S-18	-	-	-	-	-	-	-	-	-	14	16	18	21	23	25	28	30	33	36	39	42	45	48	52	55	59	63	67	71	75	79	83	88	92
TCC24X20L-21	-	-	-	-	-	-	-	-	-	-	-	-	-	-	-	15	16	18	19	21	23	24	26	28	30	32	34	36	38	40	42	45	47	50
TCC24X22L-21	-	-	-	-	-	-	-	-	-	-	-	-	-	-	-	15	16	18	19	21	23	24	26	28	30	32	34	36	38	40	42	45	47	50
TCC24X24L-21	-	-	-	-	-	-	-	-	-	-	-	-	-	-	-	15	16	18	19	21	23	24	26	28	30	32	34	36	38	40	42	45	47	50

Hydronic Data

TCF Waterside Pressure Drop kPa (20% Ethylene Glycol)

	Water flow rate l/s																																	
	8	10	12	14	16	18	20	22	24	26	28	30	32	34	36	38	40	42	44	46	48	50	52	54	56	58	60	62	64	66	68	70	72	74
TCF11R06S-07	-	74	99	127	160	195	234	277	323	-	-	-	-	-	-	-	-	-	-	-	-	-	-	-	-	-	-	-	-	-	-	-	-	-
TCF11R08S-07	-	65	88	115	145	178	214	254	297	-	-	-	-	-	-	-	-	-	-	-	-	-	-	-	-	-	-	-	-	-	-	-	-	-
TCF11R06L-11	-	51	67	86	107	130	155	182	211	242	276	311	-	-	-	-	-	-	-	-	-	-	-	-	-	-	-	-	-	-	-	-	-	-
TCF11R08L-08	-	-	-	-	65	79	94	110	128	148	168	190	214	238	264	291	320	350	-	-	-	-	-	-	-	-	-	-	-	-	-	-	-	-
TCF11R10L-10	-	-	-	55	68	84	100	118	138	159	181	205	231	258	286	-	-	-	-	-	-	-	-	-	-	-	-	-	-	-	-	-	-	-
TCF12R08S-09	-	-	-	-	-	75	89	105	122	140	159	179	201	224	248	274	300	328	357	387	419	452	-	-	-	-	-	-	-	-	-	-	-	-
TCF12R10S-05	-	-	-	-	-	72	86	101	117	135	153	173	194	216	239	263	289	316	344	373	403	435	-	-	-	-	-	-	-	-	-	-	-	-
TCF12R12S-05	-	-	-	-	-	67	80	94	110	126	144	162	182	203	225	248	272	298	324	352	381	411	-	-	-	-	-	-	-	-	-	-	-	-
TCF12R14S-05	-	-	-	-	-	64	77	91	105	121	138	157	176	196	218	240	264	289	314	341	369	398	-	-	-	-	-	-	-	-	-	-	-	-
TCF12R12L-12	-	-	-	-	-	-	-	-	66	76	86	96	108	120	132	145	159	174	189	204	220	237	255	273	291	311	331	351	372	394	416	439	-	-
TCF12R14L-12	-	-	-	-	-	-	-	-	61	70	80	90	100	111	123	136	149	162	176	191	206	222	238	255	273	291	310	329	349	370	391	412	-	-
TCF12R16L-12	-	-	-	-	-	-	-	-	58	66	75	85	95	106	117	129	141	154	167	181	196	211	227	243	260	277	295	314	333	353	373	393	-	-
TCF12R18L-13	-	-	-	-	-	-	-	-	-	62	70	79	89	99	110	121	132	145	157	171	184	199	214	229	245	262	279	296	314	333	352	372	392	413
TCF12R20L-13	-	-	-	-	-	-	-	-	-	60	68	77	86	96	106	117	129	141	153	166	180	194	208	223	239	255	272	289	307	325	344	363	383	403
TCF22R10S-22	-	-	-	-	-	72	85	100	115	132	150	169	189	211	233	256	281	307	333	361	390	-	-	-	-	-	-	-	-	-	-	-	-	-
TCF22R12S-22	-	-	-	-	-	67	80	94	108	124	141	160	179	199	220	242	266	290	316	342	370	-	-	-	-	-	-	-	-	-	-	-	-	-
TCF22R14S-22	-	-	-	-	-	64	77	90	105	120	137	154	173	193	213	235	258	282	307	333	360	-	-	-	-	-	-	-	-	-	-	-	-	-
TCF22R12L-23	-	-	-	-	-	-	-	-	-	72	82	92	102	113	125	137	150	164	178	192	207	223	239	256	274	292	310	329	349	369	390	411	433	456
TCF22R14L-23	-	-	-	-	-	-	-	-	-	67	76	85	95	105	116	128	140	153	166	179	194	208	224	239	256	273	290	308	326	345	365	385	406	427
TCF22R16L-23	-	-	-	-	-	-	-	-	-	63	71	80	89	99	110	121	132	144	157	170	183	197	212	227	243	259	275	292	310	328	347	366	386	406
TCF22R18L-23	-	-	-	-	-	-	-	-	-	60	68	77	86	96	106	116	127	139	151	164	177	190	204	219	234	250	266	282	299	317	335	354	373	392
TCF22R20L-23	-	-	-	-	-	-	-	-	-	58	66	74	83	92	102	112	123	135	146	159	171	184	198	212	227	242	258	274	291	308	325	343	362	381
TCF23R12S-24	-	-	-	-	-	-	-	-	66	75	85	95	106	118	130	143	156	170	185	200	215	231	248	266	284	302	321	341	361	382	404	426	-	-
TCF23R14S-24	-	-	-	-	-	-	-	-	61	70	79	89	99	110	121	133	146	159	172	187	201	216	232	249	266	283	301	320	339	358	379	399	-	-
TCF23R16S-25	-	-	-	-	-	-	-	-	-	63	71	80	89	99	110	121	132	144	157	170	183	197	212	227	243	259	275	292	310	328	347	366	385	406
TCF23R18S-25	-	-	-	-	-	-	-	-	-	60	68	76	85	95	105	115	126	138	150	162	175	189	203	217	232	248	264	280	297	315	332	351	370	389
TCF23R18L-28	-	-	-	-	-	-	-	-	-	-	-	-	-	-	-	71	77	84	91	98	106	114	122	131	140	149	158	168	178	188	198	209	220	231
TCF23R20L-28	-	-	-	-	-	-	-	-	-	-	-	-	-	-	-	67	73	80	86	93	101	108	116	124	133	141	150	159	169	179	189	199	210	220
TCF23R22L-28	-	-	-	-	-	-	-	-	-	-	-	-	-	-	-	64	70	76	82	89	96	104	111	119	127	135	144	153	162	171	181	191	201	211
TCF23R24L-28	-	-	-	-	-	-	-	-	-	-	-	-	-	-	-	61	67	73	80	86	93	100	107	115	123	131	139	148	157	166	175	185	195	205
TCF24R16S-26	-	-	-	-	-	-	-	-	-	-	-	-	-	65	72	78	86	93	101	109	118	126	135	145	154	164	175	185	196	207	219	231	243	255
TCF24R18S-26	-	-	-	-	-	-	-	-	-	-	-	-	-	61	67	73	80	87	94	102	110	118	127	136	145	154	164	174	184	195	206	217	228	240
TCF24R20S-26	-	-	-	-	-	-	-	-	-	-	-	-	-	57	63	69	76	83	90	97	104	112	120	129	138	147	156	165	175	185	196	206	217	228
TCF24R22S-27	-	-	-	-	-	-	-	-	-	-	-	-	-	-	59	65	71	77	84	91	98	105	113	121	129	137	146	155	164	174	184	194	204	214
TCF24R24S-27	-	-	-	-	-	-	-	-	-	-	-	-	-	-	57	63	68	75	81	88	95	102	109	117	125	133	142	150	159	169	178	188	198	208
TCF24R22L-21	-	-	-	-	-	-	-	-	-	-	-	-	-	-	-	64	69	76	82	89	96	103	110	118	126	134	142	151	160	169	179	188	198	209
TCF24R24L-21	-	-	-	-	-	-	-	-	-	-	-	-	-	-	-	61	67	73	79	86	92	99	107	114	122	130	138	146	155	164	173	183	192	202
TCF11X06S-07	-	74	99	127	160	195	234	277	323	-	-	-	-	-	-	-	-	-	-	-	-	-	-	-	-	-	-	-	-	-	-	-	-	-
TCF11X08S-07	-	65	88	115	145	178	214	254	297	-	-	-	-	-	-	-	-	-	-	-	-	-	-	-	-	-	-	-	-	-	-	-	-	-

Hydronic Data

TCF Waterside Pressure Drop kPa (20% Ethylene Glycol)

	Water flow rate l/s																																	
	8	10	12	14	16	18	20	22	24	26	28	30	32	34	36	38	40	42	44	46	48	50	52	54	56	58	60	62	64	66	68	70	72	74
TCF11X06L-11	-	51	67	86	107	130	155	182	211	242	276	311	-	-	-	-	-	-	-	-	-	-	-	-	-	-	-	-	-	-	-	-	-	-
TCF11X08L-08	-	-	-	-	65	79	94	110	128	148	168	190	214	238	264	291	320	350	-	-	-	-	-	-	-	-	-	-	-	-	-	-	-	-
TCF11X10L-10	-	-	-	55	68	84	100	118	138	159	181	205	231	258	286	-	-	-	-	-	-	-	-	-	-	-	-	-	-	-	-	-	-	-
TCF12X08S-09	-	-	-	-	-	75	89	105	122	140	159	179	201	224	248	274	300	328	357	387	419	452	-	-	-	-	-	-	-	-	-	-	-	-
TCF12X10S-05	-	-	-	-	-	72	86	101	117	135	153	173	194	216	239	263	289	316	344	373	403	435	-	-	-	-	-	-	-	-	-	-	-	-
TCF12X12S-05	-	-	-	-	-	67	80	94	110	126	144	162	182	203	225	248	272	298	324	352	381	411	-	-	-	-	-	-	-	-	-	-	-	-
TCF12X14S-05	-	-	-	-	-	64	77	91	105	121	138	157	176	196	218	240	264	289	314	341	369	398	-	-	-	-	-	-	-	-	-	-	-	-
TCF12X12L-12	-	-	-	-	-	-	-	-	66	76	86	96	108	120	132	145	159	174	189	204	220	237	255	273	291	311	331	351	372	394	416	439	-	-
TCF12X14L-12	-	-	-	-	-	-	-	-	61	70	80	90	100	111	123	136	149	162	176	191	206	222	238	255	273	291	310	329	349	370	391	412	-	-
TCF12X16L-12	-	-	-	-	-	-	-	-	58	66	75	85	95	106	117	129	141	154	167	181	196	211	227	243	260	277	295	314	333	353	373	393	-	-
TCF12X18L-13	-	-	-	-	-	-	-	-	-	62	70	79	89	99	110	121	132	145	157	171	184	199	214	229	245	262	279	296	314	333	352	372	392	413
TCF12X20L-13	-	-	-	-	-	-	-	-	-	60	68	77	86	96	106	117	129	141	153	166	180	194	208	223	239	255	272	289	307	325	344	363	383	403
TCF22X10S-22	-	-	-	-	-	72	85	100	115	132	150	169	189	211	233	256	281	307	333	361	390	-	-	-	-	-	-	-	-	-	-	-	-	-
TCF22X12S-22	-	-	-	-	-	67	80	94	108	124	141	160	179	199	220	242	266	290	316	342	370	-	-	-	-	-	-	-	-	-	-	-	-	-
TCF22X14S-22	-	-	-	-	-	64	77	90	105	120	137	154	173	193	213	235	258	282	307	333	360	-	-	-	-	-	-	-	-	-	-	-	-	-
TCF22X12L-23	-	-	-	-	-	-	-	-	-	72	82	92	102	113	125	137	150	164	178	192	207	223	239	256	274	292	310	329	349	369	390	411	433	456
TCF22X14L-23	-	-	-	-	-	-	-	-	-	67	76	85	95	105	116	128	140	153	166	179	194	208	224	239	256	273	290	308	326	345	365	385	406	427
TCF22X16L-23	-	-	-	-	-	-	-	-	-	63	71	80	89	99	110	121	132	144	157	170	183	197	212	227	243	259	275	292	310	328	347	366	386	406
TCF22X18L-23	-	-	-	-	-	-	-	-	-	60	68	77	86	96	106	116	127	139	151	164	177	190	204	219	234	250	266	282	299	317	335	354	373	392
TCF22X20L-23	-	-	-	-	-	-	-	-	-	58	66	74	83	92	102	112	123	135	146	159	171	184	198	212	227	242	258	274	291	308	325	343	362	381
TCF23X12S-24	-	-	-	-	-	-	-	-	66	75	85	95	106	118	130	143	156	170	185	200	215	231	248	266	284	302	321	341	361	382	404	426	-	-
TCF23X14S-24	-	-	-	-	-	-	-	-	61	70	79	89	99	110	121	133	146	159	172	187	201	216	232	249	266	283	301	320	339	358	379	399	-	-
TCF23X16S-25	-	-	-	-	-	-	-	-	-	63	71	80	89	99	110	121	132	144	157	170	183	197	212	227	243	259	275	292	310	328	347	366	385	406
TCF23X18S-25	-	-	-	-	-	-	-	-	-	60	68	76	85	95	105	115	126	138	150	162	175	189	203	217	232	248	264	280	297	315	332	351	370	389
TCF23X18L-28	-	-	-	-	-	-	-	-	-	-	-	-	-	-	-	71	77	84	91	98	106	114	122	131	140	149	158	168	178	188	198	209	220	231
TCF23X20L-28	-	-	-	-	-	-	-	-	-	-	-	-	-	-	-	67	73	80	86	93	101	108	116	124	133	141	150	159	169	179	189	199	210	220
TCF23X22L-28	-	-	-	-	-	-	-	-	-	-	-	-	-	-	-	64	70	76	82	89	96	104	111	119	127	135	144	153	162	171	181	191	201	211
TCF23X24L-28	-	-	-	-	-	-	-	-	-	-	-	-	-	-	-	61	67	73	80	86	93	100	107	115	123	131	139	148	157	166	175	185	195	205
TCF24X16S-26	-	-	-	-	-	-	-	-	-	-	-	-	-	65	72	78	86	93	101	109	118	126	135	145	154	164	175	185	196	207	219	231	243	255
TCF24X18S-26	-	-	-	-	-	-	-	-	-	-	-	-	-	61	67	73	80	87	94	102	110	118	127	136	145	154	164	174	184	195	206	217	228	240
TCF24X20S-26	-	-	-	-	-	-	-	-	-	-	-	-	-	57	63	69	76	83	90	97	104	112	120	129	138	147	156	165	175	185	196	206	217	228
TCF24X22S-27	-	-	-	-	-	-	-	-	-	-	-	-	-	-	59	65	71	77	84	91	98	105	113	121	129	137	146	155	164	174	184	194	204	214
TCF24X24S-27	-	-	-	-	-	-	-	-	-	-	-	-	-	-	57	63	68	75	81	88	95	102	109	117	125	133	142	150	159	169	178	188	198	208
TCF24X22L-21	-	-	-	-	-	-	-	-	-	-	-	-	-	-	-	64	69	76	82	89	96	103	110	118	126	134	142	151	160	169	179	188	198	209
TCF24X24L-21	-	-	-	-	-	-	-	-	-	-	-	-	-	-	-	61	67	73	79	86	92	99	107	114	122	130	138	146	155	164	173	183	192	202

Hydronic Data

Evaporator Pressure Drop - 100% Water

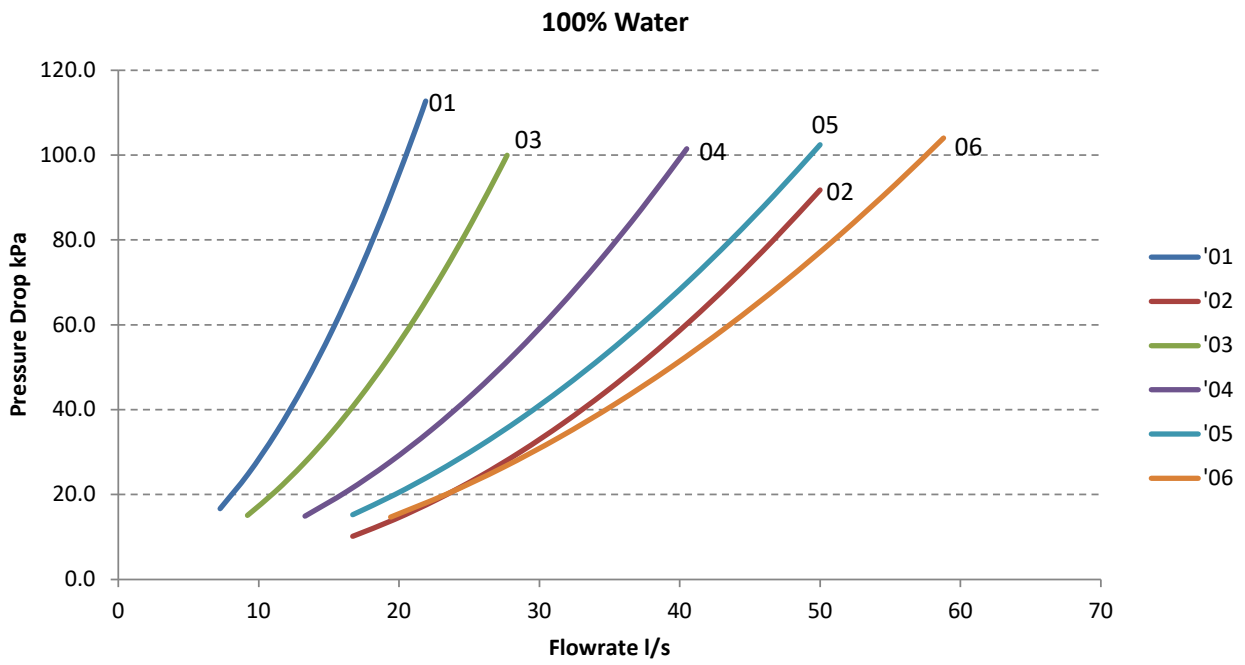

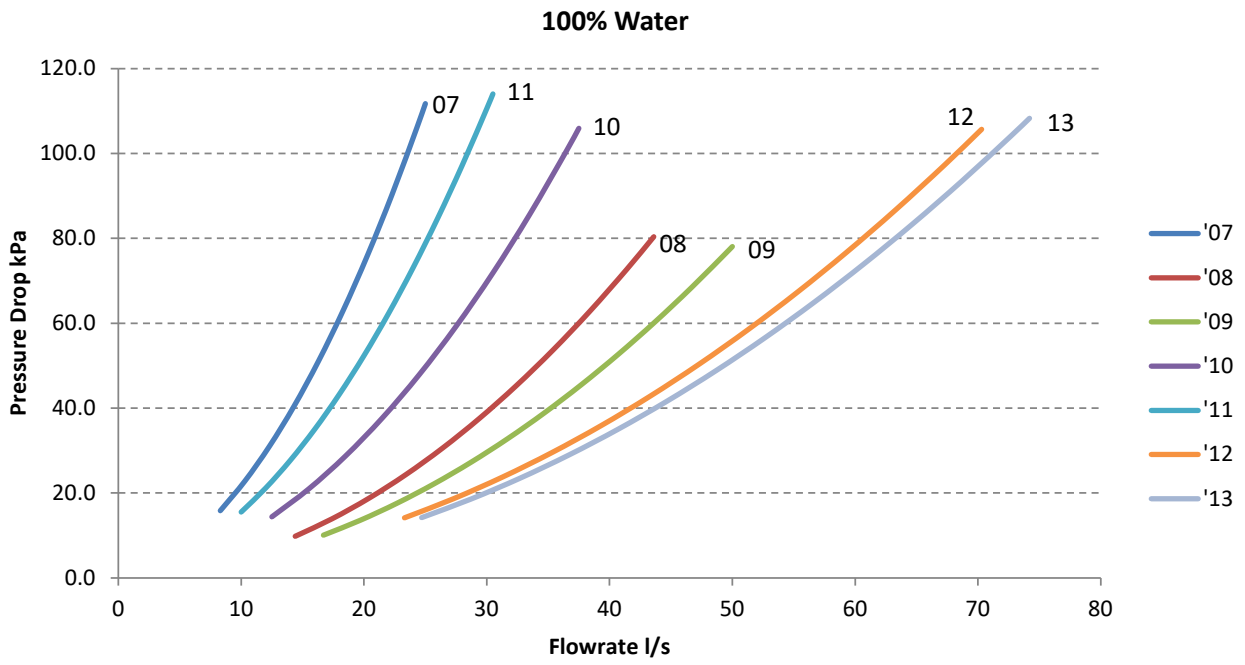

Hydronic Data

Evaporator Pressure Drop - 100% Water

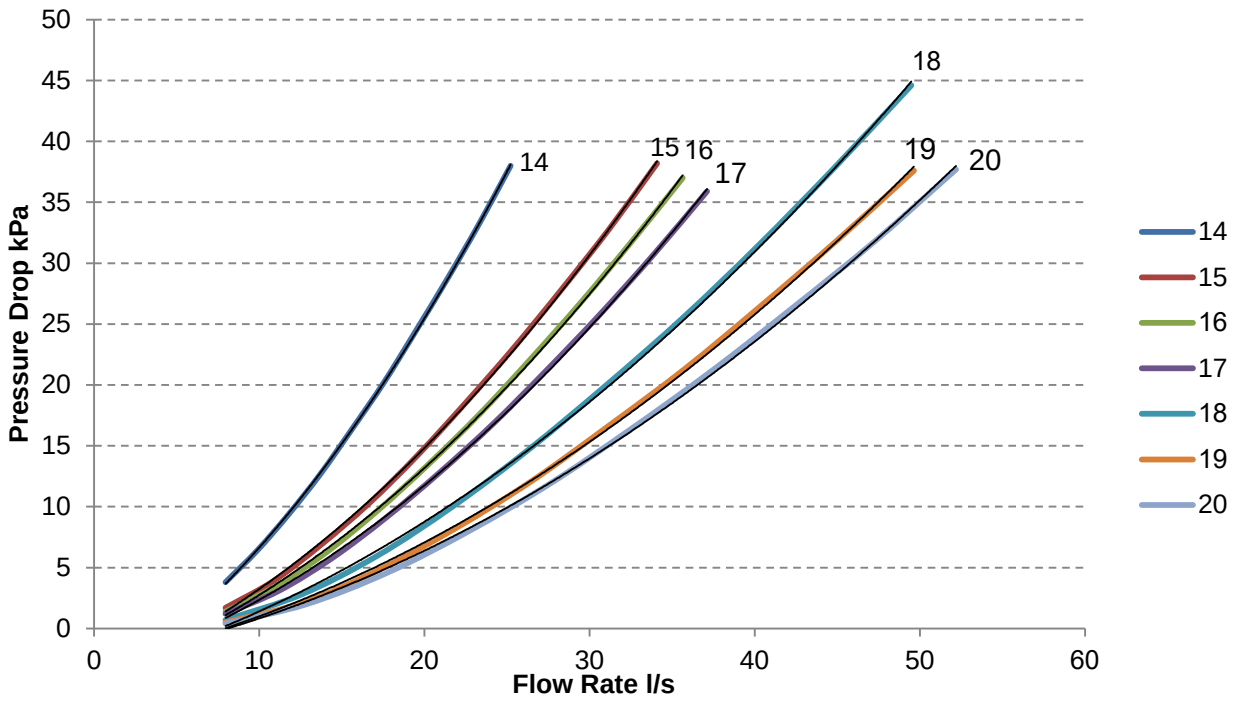

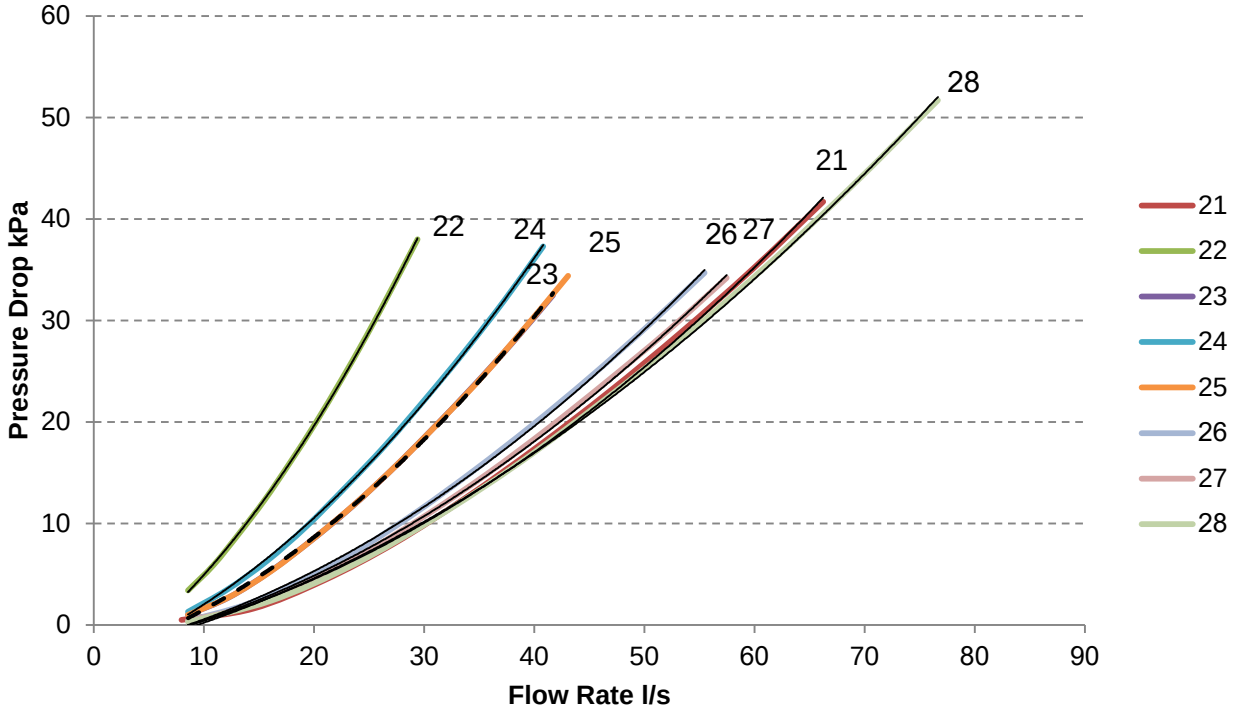

Hydronic Data

Evaporator Pressure Drop - 20% Ethylene Glycol

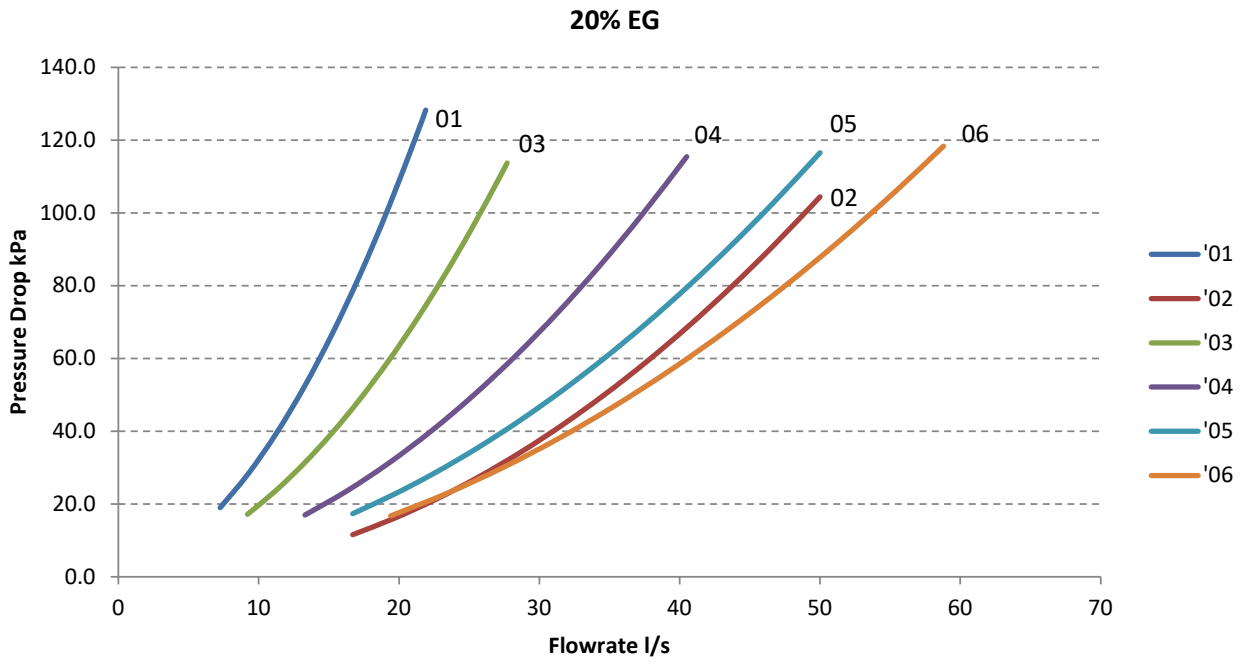

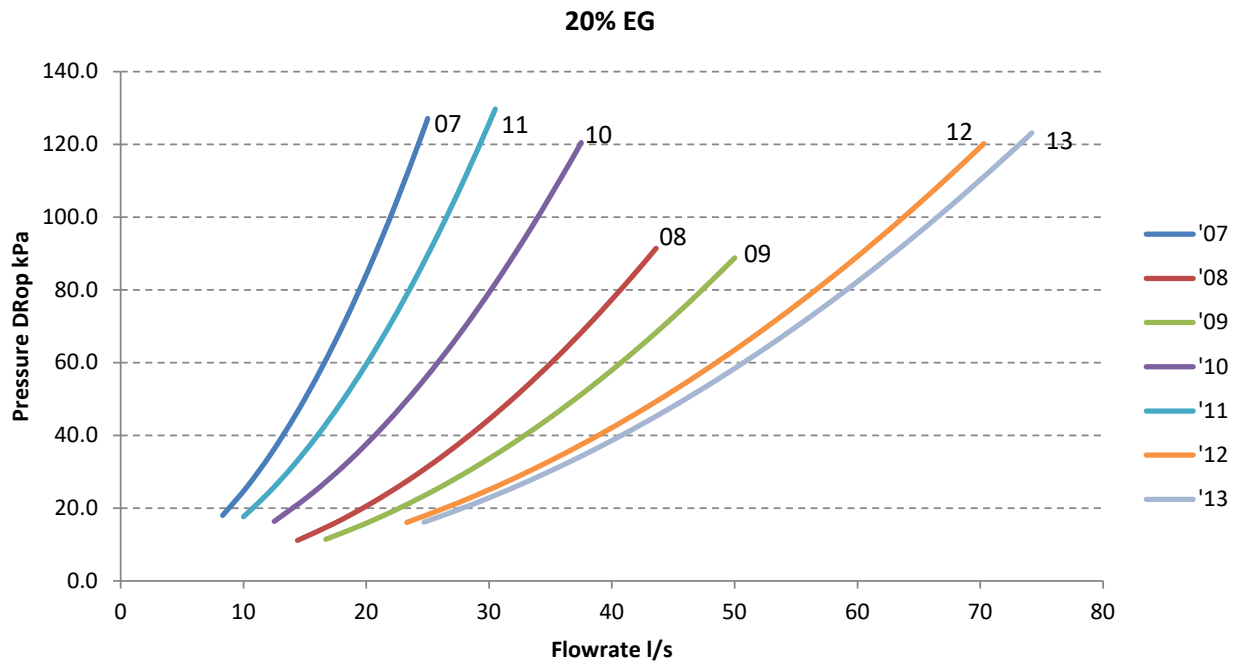

Hydronic Data

Evaporator Pressure Drop - 20% Ethylene Glycol

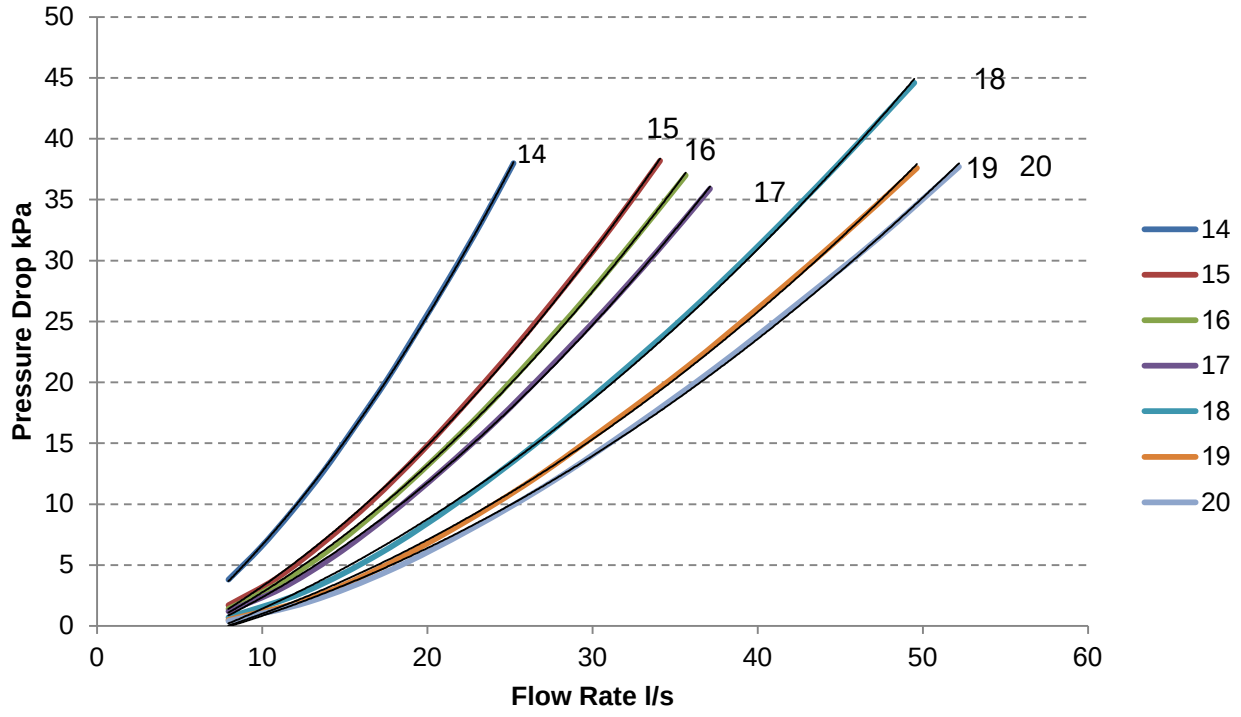

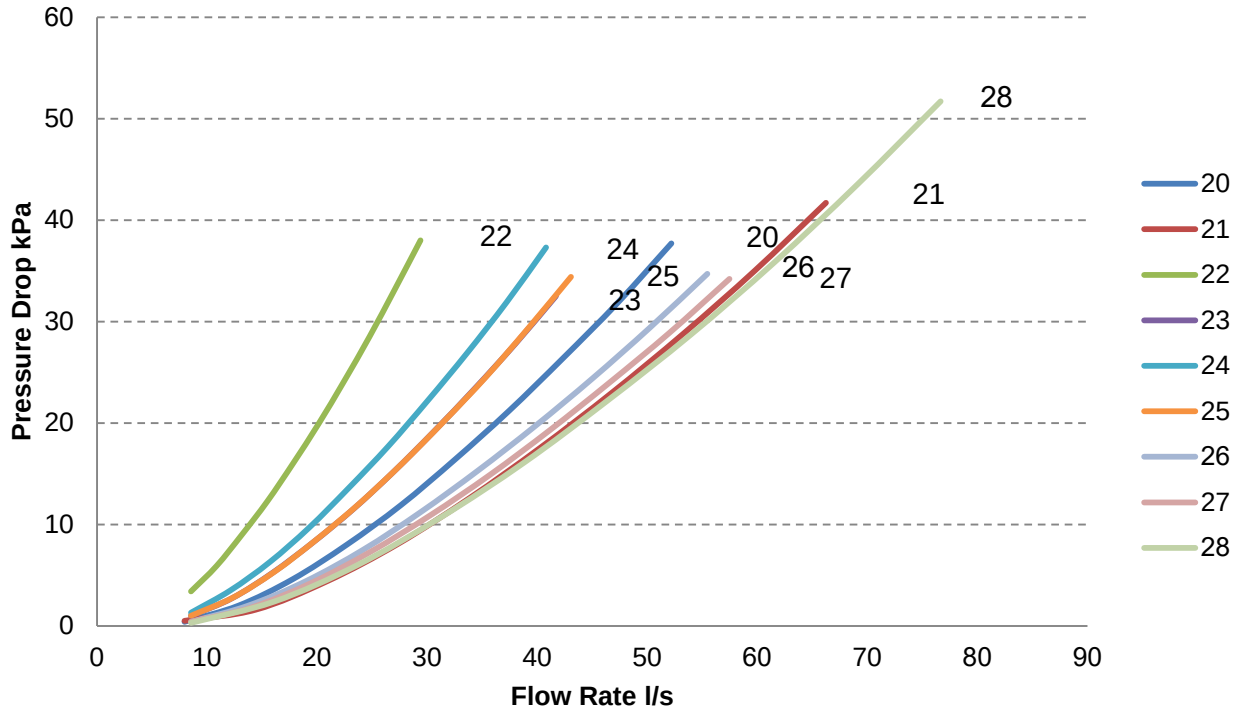

Hydronic Data

Strainer Pressure Drop - 100% Water

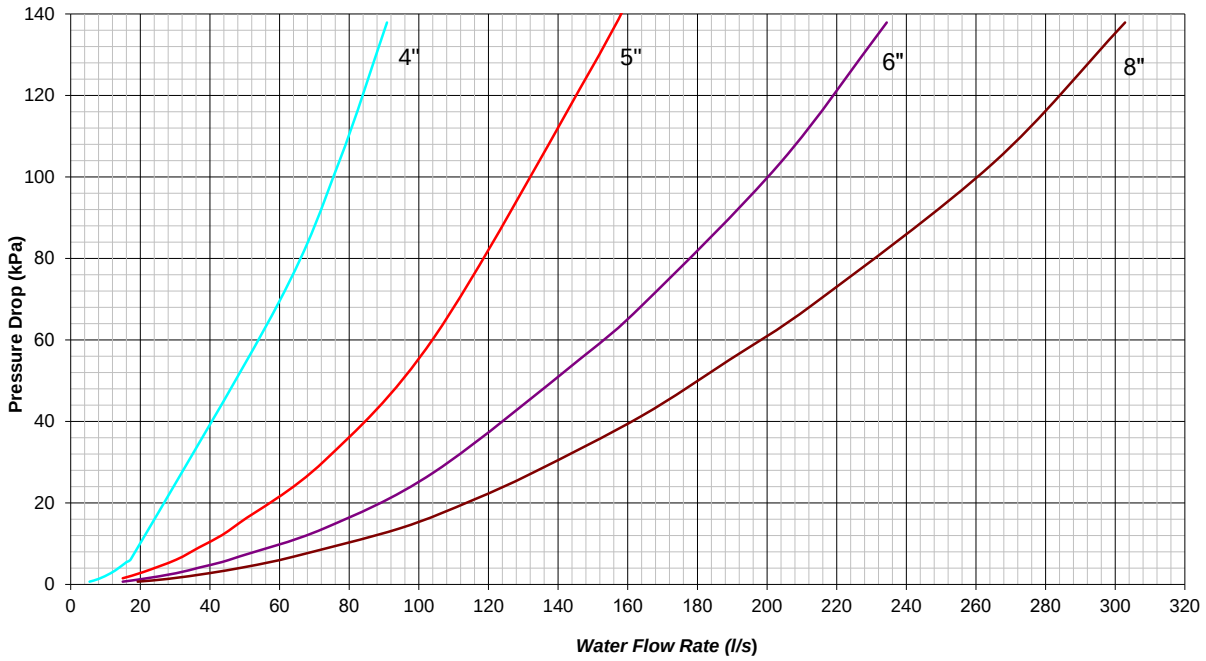

Strainer Pressure Drop - 20% Ethylene Glycol

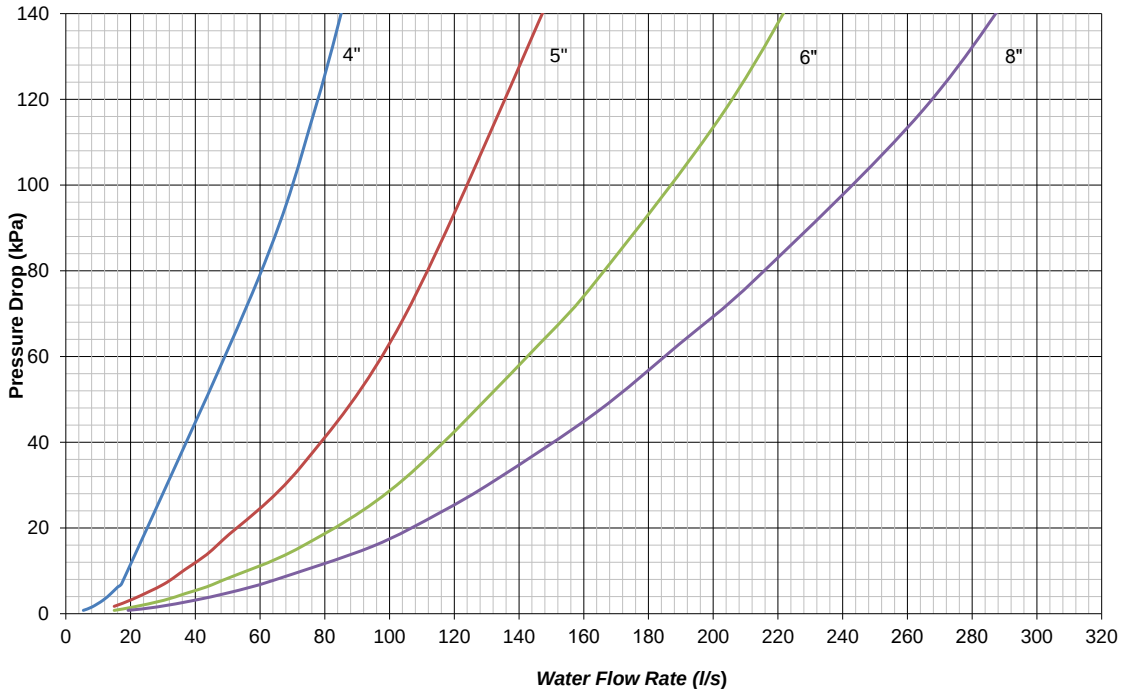

Installation Data

Air Cooled Masses & Centre of Gravity (C of G)

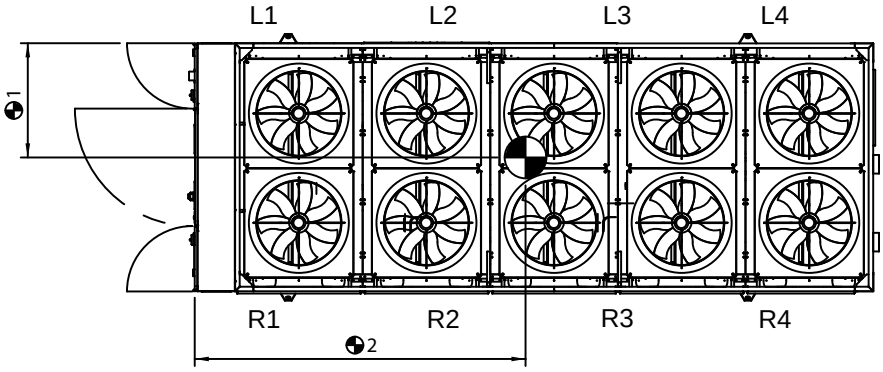

	Standard Unit C of G's			
	Machine (kg)	Operating (kg)	C of G 1	C of G 2
TCC11R04S-01	2685	2800	1350	1150
TCC11R06S-01	3240	3360	1760	1140
TCC11R08S-01	3725	3850	2260	1130
TCC11R06L-02	3415	3560	1760	1130
TCC11R08L-03	4225	4355	2330	1120
TCC11R10L-03	4805	4945	2730	1120
TCC12R08S-04	4645	4810	2360	1160
TCC12R10S-04	5190	5350	2750	1150
TCC12R12S-04	5765	5925	3130	1150
TCC12R14S-04	6550	6725	3650	1140
TCC12R10L-05	5290	5480	2750	1150
TCC12R12L-06	6325	6565	3130	1140
TCC12R14L-06	7110	7355	3600	1130
TCC12R16L-06	7490	7735	4310	1130
TCC12R18L-06	8345	8605	4930	1130
TCC12R20L-06	8965	9220	5540	1130
TCC22R08S-14	4760	4900	2340	1150
TCC22R10S-14	5390	5530	2710	1150
TCC22R12S-14	5860	6000	3080	1140
TCC22R14S-14	6500	6640	3790	1140
TCC22R10L-15	5910	6120	2710	1140
TCC22R12L-15	6400	6610	3070	1140
TCC22R14L-15	7030	7240	3760	1130
TCC22R16L-16	7790	8010	4280	1130
TCC22R18L-16	8220	8440	4800	1130
TCC22R20L-16	9010	9230	5510	1130
TCC23R12S-17	6880	7110	3240	1160
TCC23R14S-17	7440	7670	3890	1150
TCC23R16S-17	7850	8080	4240	1150
TCC23R18S-17	8530	8760	4940	1140
TCC23R16L-19	8600	8880	4240	1140
TCC23R18L-19	9270	9550	4950	1140
TCC23R20L-20	10190	10480	5480	1140
TCC23R22L-20	10800	11090	6320	1130
TCC23R24L-20	11440	11730	6710	1130
TCC24R16S-18	8580	8830	4370	1170
TCC24R18S-18	8910	9160	4850	1160
TCC24R20S-18	9860	10110	5540	1160
TCC24R22S-18	10480	10730	6360	1160
TCC24R24S-18	11110	11360	6620	1150
TCC24R20L-21	10720	11040	5550	1150
TCC24R22L-21	11360	11680	6380	1150
TCC24R24L-21	11990	12310	6630	1150

Centre of gravity is always measured from the control panel end.

Above refers to standard configurations, contact Airedale for other options.

Installation Data

Air Cooled Masses & Centre of Gravity (C of G)

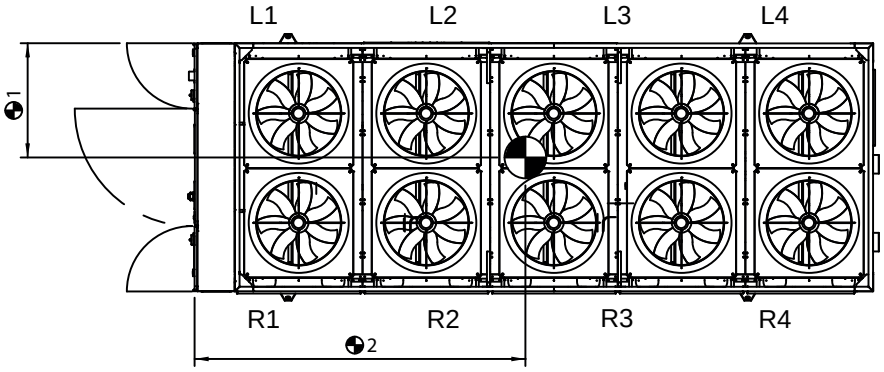

	Standard Unit C of G's			
	Machine (kg)	Operating (kg)	C of G 1	C of G 2
TCC11X04S-01	2685	2800	1350	1150
TCC11X06S-01	3240	3360	1760	1140
TCC11X08S-01	3725	3850	2260	1130
TCC11X06L-02	3415	3560	1760	1130
TCC11X08L-03	4225	4355	2330	1120
TCC11X10L-03	4805	4945	2730	1120
TCC12X08S-04	4645	4810	2360	1160
TCC12X10S-04	5190	5350	2750	1150
TCC12X12S-04	5765	5925	3130	1150
TCC12X14S-04	6550	6725	3650	1140
TCC12X10L-05	5290	5480	2750	1150
TCC12X12L-06	6325	6565	3130	1140
TCC12X14L-06	7110	7355	3600	1130
TCC12X16L-06	7490	7735	4310	1130
TCC12X18L-06	8345	8605	4930	1130
TCC12X20L-06	8965	9220	5540	1130
TCC22X08S-14	4760	4900	2340	1150
TCC22X10S-14	5390	5530	2710	1150
TCC22X12S-14	5860	6000	3080	1140
TCC22X14S-14	6500	6640	3790	1140
TCC22X10L-15	5910	6120	2710	1140
TCC22X12L-15	6400	6610	3070	1140
TCC22X14L-15	7030	7240	3760	1130
TCC22X16L-16	7790	8010	4280	1130
TCC22X18L-16	8220	8440	4800	1130
TCC22X20L-16	9010	9230	5510	1130
TCC23X12S-17	6880	7110	3240	1160
TCC23X14S-17	7440	7670	3890	1150
TCC23X16S-17	7850	8080	4240	1150
TCC23X18S-17	8530	8760	4940	1140
TCC23X16L-19	8600	8880	4240	1140
TCC23X18L-19	9270	9550	4950	1140
TCC23X20L-20	10190	10480	5480	1140
TCC23X22L-20	10800	11090	6320	1130
TCC23X24L-20	11440	11730	6710	1130
TCC24X16S-18	8580	8830	4370	1170
TCC24X18S-18	8910	9160	4850	1160
TCC24X20S-18	9860	10110	5540	1160
TCC24X22S-18	10480	10730	6360	1160
TCC24X24S-18	11110	11360	6620	1150
TCC24X20L-21	10720	11040	5550	1150
TCC24X22L-21	11360	11680	6380	1150
TCC24X24L-21	11990	12310	6630	1150

Centre of gravity is always measured from the control panel end.

Above refers to standard configurations, contact Airedale for other options.

Installation Data

Freecool Masses & Centre of Gravity (C of G)

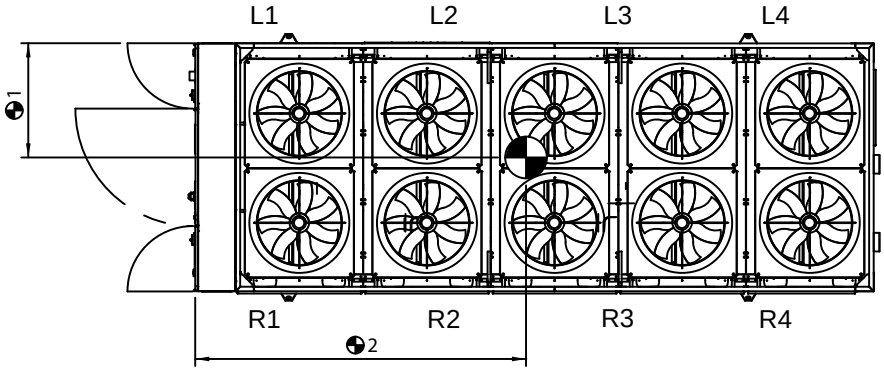

	Standard Unit C of G's			
	Machine (kg)	Operating (kg)	C of G 1	C of G 2
TCF11R06S-07	3965	4425	1840	1170
TCF11R08S-07	4750	5300	2350	1110
TCF11R06L-11	4410	4965	1840	1090
TCF11R08L-08	5070	5705	2390	1090
TCF11R10L-10	6120	6845	2820	1090
TCF12R08S-09	5495	5930	2390	1130
TCF12R10S-05	6490	7240	2820	1120
TCF12R12S-05	7385	8255	3230	1120
TCF12R14S-05	8315	9335	3910	1110
TCF12R12L-12	8140	9205	3240	1120
TCF12R14L-12	9065	10295	3890	1100
TCF12R16L-12	9730	11060	4570	1100
TCF12R18L-13	10735	12195	5260	1090
TCF12R20L-13	11620	13200	5920	1090
TCF22R10S-22	6690	7330	2810	1090
TCF22R12S-22	7500	8230	3220	1090
TCF22R14S-22	8390	9270	3960	1080
TCF22R12L-23	8400	9310	3220	1070
TCF22R14L-23	9360	10450	3960	1060
TCF22R16L-23	10270	11440	4460	1060
TCF22R18L-23	11080	12370	5000	1050
TCF22R20L-23	12060	13420	5700	1050
TCF23R12S-24	8780	9700	3380	1080
TCF23R14S-24	9690	10710	4040	1080
TCF23R16S-25	10400	11570	4440	1070
TCF23R18S-25	11220	12450	5090	1070
TCF23R18L-28	12310	13720	5130	1060
TCF23R20L-28	13510	15170	5700	1050
TCF23R22L-28	14350	16100	6530	1040
TCF23R24L-28	15280	17160	6920	1040
TCF24R16S-26	11900	13210	4570	1080
TCF24R18S-26	12590	14040	5050	1070
TCF24R20S-26	13780	15390	5740	1060
TCF24R22S-27	14590	16310	6570	1060
TCF24R24S-27	15570	17490	6840	1050
TCF24R22L-21	14800	16530	6570	1060
TCF24R24L-21	15800	17730	6840	1050

Centre of gravity is always measured from the control panel end.

Above refers to standard configurations, contact Airedale for other options.

Installation Data

Freecool Masses & Centre of Gravity (C of G)

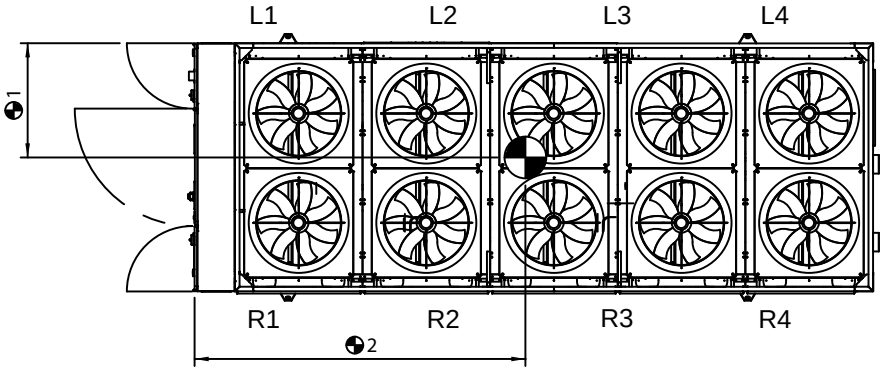

	Standard Unit C of G's			
	Machine (kg)	Operating (kg)	C of G 1	C of G 2
TCF11X06S-07	3965	4425	1840	1170
TCF11X08S-07	4750	5300	2350	1110
TCF11X06L-11	4410	4965	1840	1090
TCF11X08L-08	5070	5705	2390	1090
TCF11X10L-10	6120	6845	2820	1090
TCF12X08S-09	5495	5930	2390	1130
TCF12X10S-05	6490	7240	2820	1120
TCF12X12S-05	7385	8255	3230	1120
TCF12X14S-05	8315	9335	3910	1110
TCF12X12L-12	8140	9205	3240	1120
TCF12X14L-12	9065	10295	3890	1100
TCF12X16L-12	9730	11060	4570	1100
TCF12X18L-13	10735	12195	5260	1090
TCF12X20L-13	11620	13200	5920	1090
TCF22X10S-22	6690	7330	2810	1090
TCF22X12S-22	7500	8230	3220	1090
TCF22X14S-22	8390	9270	3960	1080
TCF22X12L-23	8400	9310	3220	1070
TCF22X14L-23	9360	10450	3960	1060
TCF22X16L-23	10270	11440	4460	1060
TCF22X18L-23	11080	12370	5000	1050
TCF22X20L-23	12060	13420	5700	1050
TCF23X12S-24	8780	9700	3380	1080
TCF23X14S-24	9690	10710	4040	1080
TCF23X16S-25	10400	11570	4440	1070
TCF23X18S-25	11220	12450	5090	1070
TCF23X18L-28	12310	13720	5130	1060
TCF23X20L-28	13510	15170	5700	1050
TCF23X22L-28	14350	16100	6530	1040
TCF23X24L-28	15280	17160	6920	1040
TCF24X16S-26	11900	13210	4570	1080
TCF24X18S-26	12590	14040	5050	1070
TCF24X20S-26	13780	15390	5740	1060
TCF24X22S-27	14590	16310	6570	1060
TCF24X24S-27	15570	17490	6840	1050
TCF24X22L-21	14800	16530	6570	1060
TCF24X24L-21	15800	17730	6840	1050

Centre of gravity is always measured from the control panel end.

Above refers to standard configurations, contact Airedale for other options.

Installation Data

Point Loadings

Air Cooled

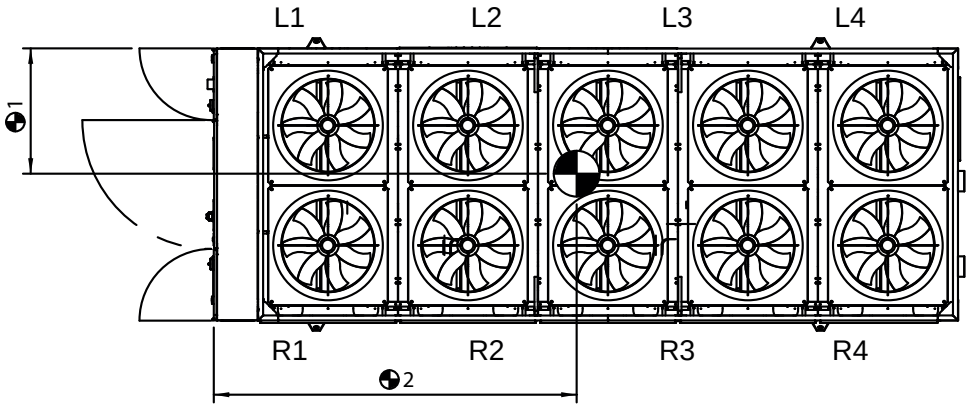

	Standard Unit Point Loads															
	L1 (kg)	L2 (kg)	L3 (kg)	L4 (kg)	L5 (kg)	L6 (kg)	L7 (kg)	L8 (kg)	R1 (kg)	R2 (kg)	R3 (kg)	R4 (kg)	R5 (kg)	R6 (kg)	R7 (kg)	R8 (kg)
TCC11R04S-01	695	645	-	-	-	-	-	-	745	715	-	-	-	-	-	-
TCC11R06S-01	625	565	430	-	-	-	-	-	665	615	460	-	-	-	-	-
TCC11R08S-01	580	475	425	385	-	-	-	-	615	510	455	405	-	-	-	-
TCC11R06L-02	660	610	455	-	-	-	-	-	695	660	480	-	-	-	-	-
TCC11R08L-03	615	535	520	460	-	-	-	-	645	570	540	470	-	-	-	-
TCC11R10L-03	695	630	575	530	-	-	-	-	725	655	595	540	-	-	-	-
TCC12R08S-04	650	570	560	490	-	-	-	-	710	645	640	545	-	-	-	-
TCC12R10S-04	725	660	605	555	-	-	-	-	790	735	675	605	-	-	-	-
TCC12R12S-04	815	730	670	615	-	-	-	-	885	810	740	660	-	-	-	-
TCC12R14S-04	800	725	660	585	460	-	-	-	885	845	740	565	460	-	-	-
TCC12R10L-05	740	675	620	565	-	-	-	-	810	755	695	620	-	-	-	-
TCC12R12L-06	900	830	760	675	-	-	-	-	960	900	820	720	-	-	-	-
TCC12R14L-06	885	825	745	645	460	-	-	-	965	935	820	615	460	-	-	-
TCC12R16L-06	780	840	805	730	595	-	-	-	810	900	870	785	620	-	-	-
TCC12R18L-06	735	670	800	780	620	580	-	-	770	710	850	830	655	605	-	-
TCC12R20L-06	785	710	845	845	675	630	-	-	825	755	900	900	700	650	-	-
TCC22R08S-14	655	605	575	485	-	-	-	-	705	685	655	530	-	-	-	-
TCC22R10S-14	750	710	635	540	-	-	-	-	815	795	705	580	-	-	-	-
TCC22R12S-14	835	770	685	580	-	-	-	-	895	850	760	620	-	-	-	-
TCC22R14S-14	780	700	630	570	515	-	-	-	825	755	690	620	550	-	-	-
TCC22R10L-15	825	810	720	590	-	-	-	-	880	885	785	625	-	-	-	-
TCC22R12L-15	920	875	770	625	-	-	-	-	975	945	835	660	-	-	-	-
TCC22R14L-15	855	785	705	615	545	-	-	-	895	835	760	665	575	-	-	-
TCC22R16L-16	875	840	800	730	650	-	-	-	910	890	855	780	680	-	-	-

Above refers to standard configurations, contact Airedale for other options.

Installation Data

Point Loadings

Air Cooled

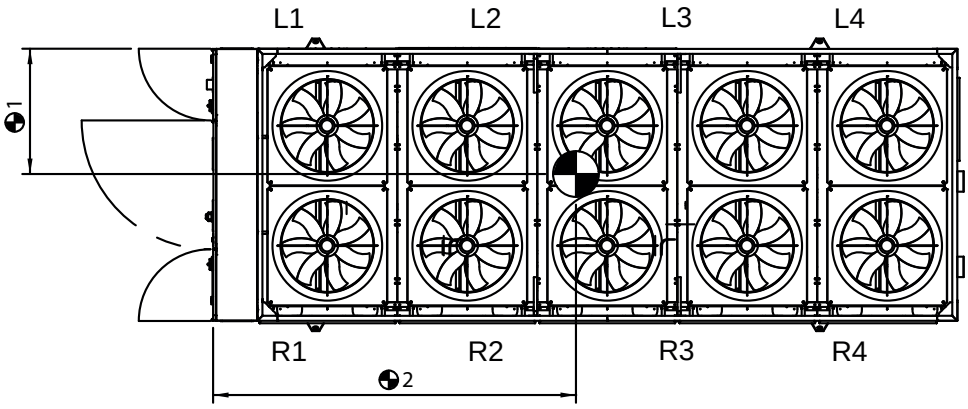

	Standard Unit Point Loads															
	L1 (kg)	L2 (kg)	L3 (kg)	L4 (kg)	L5 (kg)	L6 (kg)	L7 (kg)	L8 (kg)	R1 (kg)	R2 (kg)	R3 (kg)	R4 (kg)	R5 (kg)	R6 (kg)	R7 (kg)	R8 (kg)
TCC22R18L-16	800	745	710	670	615	565	-	-	825	785	750	715	660	595	-	-
TCC22R20L-16	835	770	775	755	710	660	-	-	865	815	815	795	750	685	-	-
TCC23R12S-17	860	890	870	740	-	-	-	-	950	1005	975	815	-	-	-	-
TCC23R14S-17	810	790	755	680	610	-	-	-	890	885	850	750	650	-	-	-
TCC23R16S-17	875	835	795	720	630	-	-	-	950	925	885	790	675	-	-	-
TCC23R18S-17	765	705	715	720	670	615	-	-	830	780	790	790	725	650	-	-
TCC23R16L-19	950	940	900	795	680	-	-	-	1020	1025	980	865	720	-	-	-
TCC23R18L-19	815	775	800	805	740	665	-	-	880	845	870	870	790	695	-	-
TCC23R20L-20	920	870	895	860	795	725	-	-	985	945	965	925	845	750	-	-
TCC23R22L-20	950	900	945	925	850	795	-	-	1010	975	1015	995	895	830	-	-
TCC23R24L-20	990	930	970	1000	935	865	-	-	1040	1000	1035	1065	995	905	-	-
TCC24R16S-18	890	855	860	810	720	-	-	-	995	985	995	925	795	-	-	-
TCC24R18S-18	810	750	745	720	665	605	-	-	905	865	860	825	745	660	-	-
TCC24R20S-18	870	805	825	810	760	705	-	-	950	915	935	915	850	765	-	-
TCC24R22S-18	910	845	870	875	810	770	-	-	985	945	990	985	905	840	-	-
TCC24R24S-18	980	905	925	920	865	805	-	-	1055	1005	1045	1030	955	870	-	-
TCC24R20L-21	930	890	925	910	840	760	-	-	1005	990	1035	1010	925	820	-	-
TCC24R22L-21	970	925	975	975	895	835	-	-	1035	1020	1085	1080	980	900	-	-
TCC24R24L-21	1040	985	1030	1020	945	865	-	-	1115	1085	1140	1125	1030	925	-	-

Above refers to standard configurations, contact Airedale for other options.

Installation Data

Point Loadings

Air Cooled

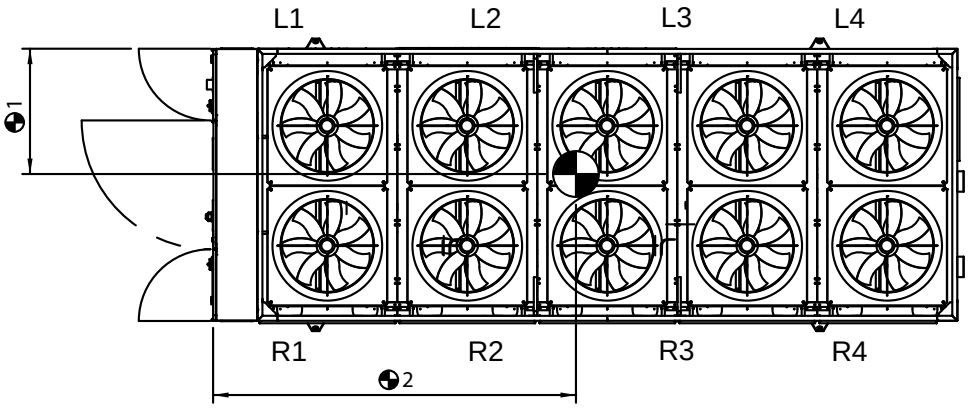

	Standard Unit Point Loads															
	L1 (kg)	L2 (kg)	L3 (kg)	L4 (kg)	L5 (kg)	L6 (kg)	L7 (kg)	L8 (kg)	R1 (kg)	R2 (kg)	R3 (kg)	R4 (kg)	R5 (kg)	R6 (kg)	R7 (kg)	R8 (kg)
TCC11X04S-01	695	645	-	-	-	-	-	-	745	715	-	-	-	-	-	-
TCC11X06S-01	625	565	430	-	-	-	-	-	665	615	460	-	-	-	-	-
TCC11X08S-01	580	475	425	385	-	-	-	-	615	510	455	405	-	-	-	-
TCC11X06L-02	660	610	455	-	-	-	-	-	695	660	480	-	-	-	-	-
TCC11X08L-03	615	535	520	460	-	-	-	-	645	570	540	470	-	-	-	-
TCC11X10L-03	695	630	575	530	-	-	-	-	725	655	595	540	-	-	-	-
TCC12X08S-04	650	570	560	490	-	-	-	-	710	645	640	545	-	-	-	-
TCC12X10S-04	725	660	605	555	-	-	-	-	790	735	675	605	-	-	-	-
TCC12X12S-04	815	730	670	615	-	-	-	-	885	810	740	660	-	-	-	-
TCC12X14S-04	800	725	660	585	460	-	-	-	885	845	740	565	460	-	-	-
TCC12X10L-05	740	675	620	565	-	-	-	-	810	755	695	620	-	-	-	-
TCC12X12L-06	900	830	760	675	-	-	-	-	960	900	820	720	-	-	-	-
TCC12X14L-06	885	825	745	645	460	-	-	-	965	935	820	615	460	-	-	-
TCC12X16L-06	780	840	805	730	595	-	-	-	810	900	870	785	620	-	-	-
TCC12X18L-06	735	670	800	780	620	580	-	-	770	710	850	830	655	605	-	-
TCC12X20L-06	785	710	845	845	675	630	-	-	825	755	900	900	700	650	-	-
TCC22X08S-14	655	605	575	485	-	-	-	-	705	685	655	530	-	-	-	-
TCC22X10S-14	750	710	635	540	-	-	-	-	815	795	705	580	-	-	-	-
TCC22X12S-14	835	770	685	580	-	-	-	-	895	850	760	620	-	-	-	-
TCC22X14S-14	780	700	630	570	515	-	-	-	825	755	690	620	550	-	-	-
TCC22X10L-15	825	810	720	590	-	-	-	-	880	885	785	625	-	-	-	-
TCC22X12L-15	920	875	770	625	-	-	-	-	975	945	835	660	-	-	-	-

Above refers to standard configurations, contact Airedale for other options.

Installation Data

Point Loadings

Air Cooled

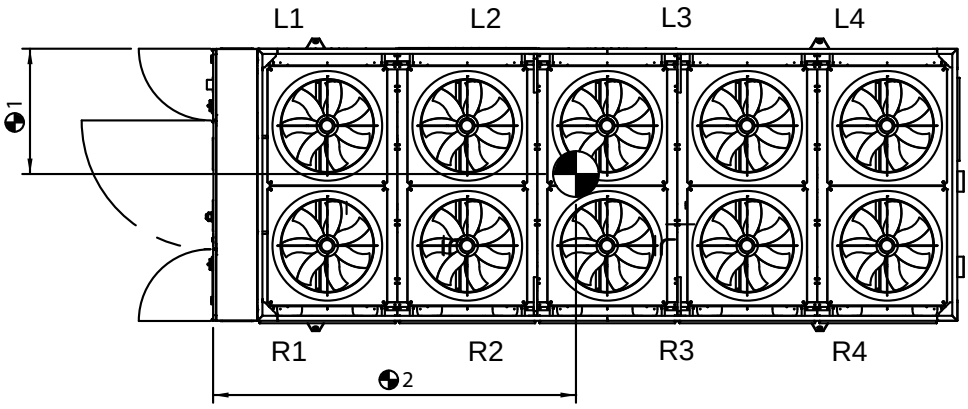

	Standard Unit Point Loads															
	L1 (kg)	L2 (kg)	L3 (kg)	L4 (kg)	L5 (kg)	L6 (kg)	L7 (kg)	L8 (kg)	R1 (kg)	R2 (kg)	R3 (kg)	R4 (kg)	R5 (kg)	R6 (kg)	R7 (kg)	R8 (kg)
TCC22X14L-15	855	785	705	615	545	-	-	-	895	835	760	665	575	-	-	-
TCC22X16L-16	875	840	800	730	650	-	-	-	910	890	855	780	680	-	-	-
TCC22X18L-16	800	745	710	670	615	565	-	-	825	785	750	715	660	595	-	-
TCC22X20L-16	835	770	775	755	710	660	-	-	865	815	815	795	750	685	-	-
TCC23X12S-17	860	890	870	740	-	-	-	-	950	1005	975	815	-	-	-	-
TCC23X14S-17	810	790	755	680	610	-	-	-	890	885	850	750	650	-	-	-
TCC23X16S-17	875	835	795	720	630	-	-	-	950	925	885	790	675	-	-	-
TCC23X18S-17	765	705	715	720	670	615	-	-	830	780	790	790	725	650	-	-
TCC23X16L-19	950	940	900	795	680	-	-	-	1020	1025	980	865	720	-	-	-
TCC23X18L-19	815	775	800	805	740	665	-	-	880	845	870	870	790	695	-	-
TCC23X20L-20	920	870	895	860	795	725	-	-	985	945	965	925	845	750	-	-
TCC23X22L-20	950	900	945	925	850	795	-	-	1010	975	1015	995	895	830	-	-
TCC23X24L-20	990	930	970	1000	935	865	-	-	1040	1000	1035	1065	995	905	-	-
TCC24X16S-18	890	855	860	810	720	-	-	-	995	985	995	925	795	-	-	-
TCC24X18S-18	810	750	745	720	665	605	-	-	905	865	860	825	745	660	-	-
TCC24X20S-18	870	805	825	810	760	705	-	-	950	915	935	915	850	765	-	-
TCC24X22S-18	910	845	870	875	810	770	-	-	985	945	990	985	905	840	-	-
TCC24X24S-18	980	905	925	920	865	805	-	-	1055	1005	1045	1030	955	870	-	-
TCC24X20L-21	930	890	925	910	840	760	-	-	1005	990	1035	1010	925	820	-	-
TCC24X22L-21	970	925	975	975	895	835	-	-	1035	1020	1085	1080	980	900	-	-
TCC24X24L-21	1040	985	1030	1020	945	865	-	-	1115	1085	1140	1125	1030	925	-	-

Above refers to standard configurations, contact Airedale for other options.

Installation Data

Point Loadings

Freecool

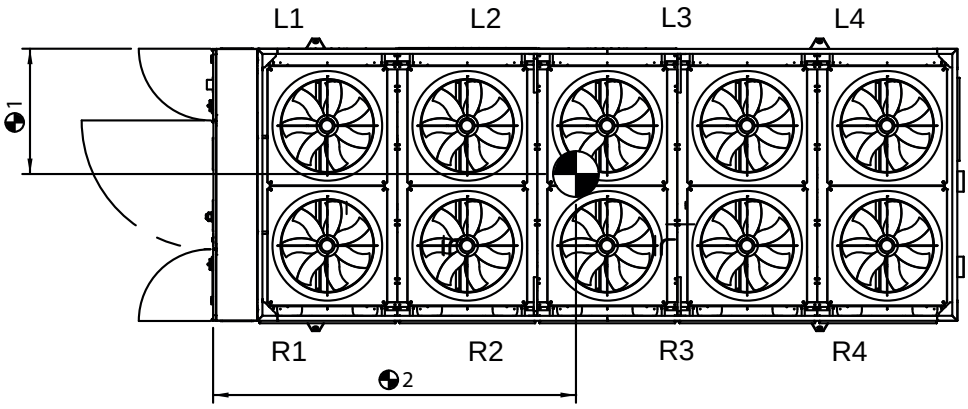

	Standard Unit Point Loads															
	L1 (kg)	L2 (kg)	L3 (kg)	L4 (kg)	L5 (kg)	L6 (kg)	L7 (kg)	L8 (kg)	R1 (kg)	R2 (kg)	R3 (kg)	R4 (kg)	R5 (kg)	R6 (kg)	R7 (kg)	R8 (kg)
TCF11R06S-07	750	715	595	-	-	-	-	-	825	830	710	-	-	-	-	-
TCF11R08S-07	745	665	640	575	-	-	-	-	765	685	650	575	-	-	-	-
TCF11R06L-11	865	900	730	-	-	-	-	-	875	895	700	-	-	-	-	-
TCF11R08L-08	780	725	715	650	-	-	-	-	790	725	695	625	-	-	-	-
TCF11R10L-10	910	880	865	795	-	-	-	-	915	875	835	770	-	-	-	-
TCF12R08S-09	790	725	710	645	-	-	-	-	835	780	765	680	-	-	-	-
TCF12R10S-05	940	910	890	820	-	-	-	-	980	950	915	835	-	-	-	-
TCF12R12S-05	1075	1035	1010	930	-	-	-	-	1125	1085	1045	950	-	-	-	-
TCF12R14S-05	950	995	985	930	755	-	-	-	1035	1085	1020	860	720	-	-	-
TCF12R12L-12	1185	1170	1145	1035	-	-	-	-	1230	1215	1175	1050	-	-	-	-
TCF12R14L-12	1035	1130	1125	1045	800	-	-	-	1115	1205	1140	950	750	-	-	-
TCF12R16L-12	950	1175	1225	1195	985	-	-	-	980	1190	1225	1180	955	-	-	-
TCF12R18L-13	895	825	1130	1225	1170	905	-	-	925	870	1120	1180	1075	875	-	-
TCF12R20L-13	960	885	1205	1345	1275	995	-	-	995	930	1200	1295	1165	950	-	-
TCF22R10S-22	935	970	965	820	-	-	-	-	965	980	920	775	-	-	-	-
TCF22R12S-22	1065	1085	1070	920	-	-	-	-	1095	1090	1035	870	-	-	-	-
TCF22R14S-22	1000	985	975	930	830	-	-	-	1010	970	930	865	775	-	-	-
TCF22R12L-23	1195	1275	1270	1040	-	-	-	-	1195	1225	1160	945	-	-	-	-

Above refers to standard configurations, contact Airedale for other options.

Installation Data

Point Loadings

Freecool

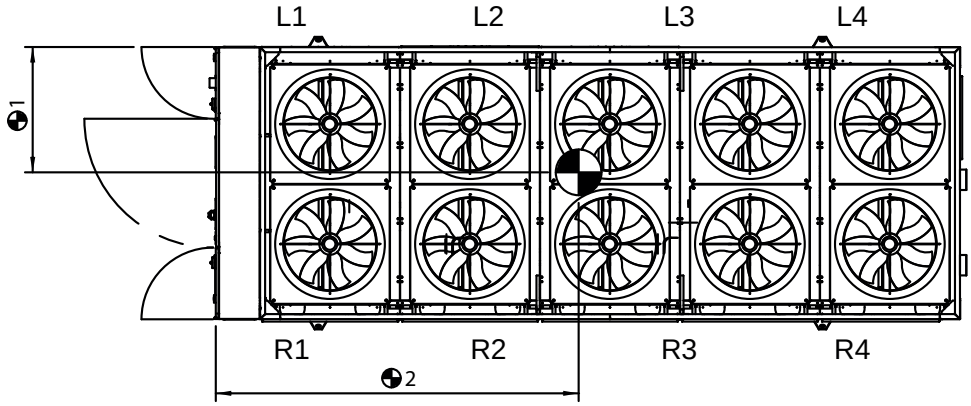

	Standard Unit Point Loads															
	L1 (kg)	L2 (kg)	L3 (kg)	L4 (kg)	L5 (kg)	L6 (kg)	L7 (kg)	L8 (kg)	R1 (kg)	R2 (kg)	R3 (kg)	R4 (kg)	R5 (kg)	R6 (kg)	R7 (kg)	R8 (kg)
TCF22R14L-23	1125	1155	1150	1070	930	-	-	-	1100	1090	1045	950	830	-	-	-
TCF22R16L-23	1160	1210	1275	1240	1065	-	-	-	1130	1150	1155	1095	955	-	-	-
TCF22R18L-23	1075	1090	1120	1140	1075	950	-	-	1040	1030	1025	1015	950	855	-	-
TCF22R20L-23	1125	1140	1220	1280	1205	1080	-	-	1090	1065	1095	1110	1050	955	-	-
TCF23R12S-24	1100	1265	1360	1205	-	-	-	-	1140	1255	1275	1100	-	-	-	-
TCF23R14S-24	1065	1130	1180	1115	980	-	-	-	1085	1120	1115	1020	895	-	-	-
TCF23R16S-25	1165	1210	1275	1230	1055	-	-	-	1175	1190	1195	1115	955	-	-	-
TCF23R18S-25	1025	1025	1100	1165	1105	985	-	-	1030	1010	1045	1065	995	895	-	-
TCF23R18L-28	1095	1130	1235	1315	1250	1100	-	-	1095	1095	1150	1180	1100	975	-	-
TCF23R20L-28	1235	1280	1395	1460	1375	1210	-	-	1220	1215	1275	1270	1180	1050	-	-
TCF23R22L-28	1295	1350	1495	1575	1440	1320	-	-	1260	1270	1350	1360	1240	1145	-	-
TCF23R24L-28	1365	1415	1560	1690	1610	1435	-	-	1315	1310	1385	1450	1375	1245	-	-
TCF24R16S-26	1230	1315	1460	1485	1260	-	-	-	1260	1315	1390	1350	1145	-	-	-
TCF24R18S-26	1145	1180	1260	1305	1230	1080	-	-	1165	1175	1210	1205	1110	970	-	-
TCF24R20S-26	1230	1270	1395	1475	1395	1230	-	-	1215	1230	1305	1315	1230	1095	-	-
TCF24R22S-27	1290	1340	1485	1590	1460	1335	-	-	1265	1275	1375	1405	1290	1195	-	-
TCF24R24S-27	1410	1455	1600	1695	1585	1410	-	-	1370	1375	1465	1490	1385	1245	-	-
TCF24R22L-21	1305	1355	1505	1605	1470	1350	-	-	1280	1300	1400	1435	1315	1210	-	-
TCF24R24L-21	1425	1475	1620	1715	1605	1425	-	-	1385	1400	1490	1515	1405	1265	-	-

Above refers to standard configurations, contact Airedale for other options.

Installation Data

Point Loadings

Freecool

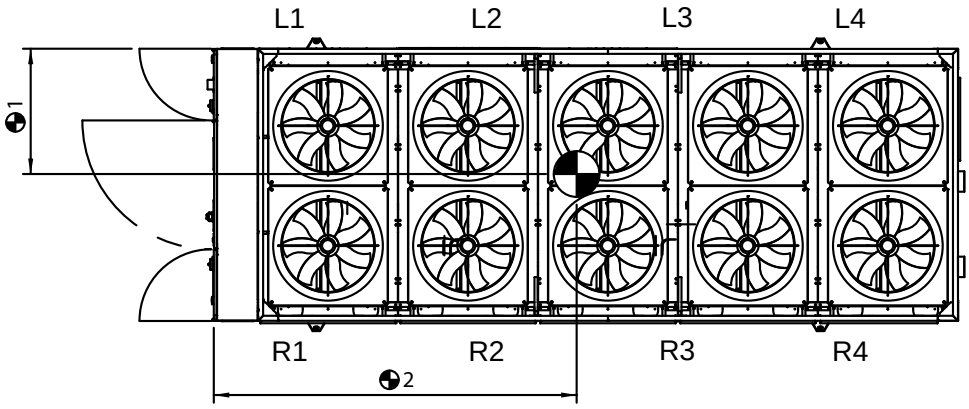

	Standard Unit Point Loads															
	L1 (kg)	L2 (kg)	L3 (kg)	L4 (kg)	L5 (kg)	L6 (kg)	L7 (kg)	L8 (kg)	R1 (kg)	R2 (kg)	R3 (kg)	R4 (kg)	R5 (kg)	R6 (kg)	R7 (kg)	R8 (kg)
TCF11X06S-07	750	715	595	-	-	-	-	-	825	830	710	-	-	-	-	-
TCF11X08S-07	745	665	640	575	-	-	-	-	765	685	650	575	-	-	-	-
TCF11X06L-11	865	900	730	-	-	-	-	-	875	895	700	-	-	-	-	-
TCF11X08L-08	780	725	715	650	-	-	-	-	790	725	695	625	-	-	-	-
TCF11X10L-10	910	880	865	795	-	-	-	-	915	875	835	770	-	-	-	-
TCF12X08S-09	790	725	710	645	-	-	-	-	835	780	765	680	-	-	-	-
TCF12X10S-05	940	910	890	820	-	-	-	-	980	950	915	835	-	-	-	-
TCF12X12S-05	1075	1035	1010	930	-	-	-	-	1125	1085	1045	950	-	-	-	-
TCF12X14S-05	950	995	985	930	755	-	-	-	1035	1085	1020	860	720	-	-	-
TCF12X12L-12	1185	1170	1145	1035	-	-	-	-	1230	1215	1175	1050	-	-	-	-
TCF12X14L-12	1035	1130	1125	1045	800	-	-	-	1115	1205	1140	950	750	-	-	-
TCF12X16L-12	950	1175	1225	1195	985	-	-	-	980	1190	1225	1180	955	-	-	-
TCF12X18L-13	895	825	1130	1225	1170	905	-	-	925	870	1120	1180	1075	875	-	-
TCF12X20L-13	960	885	1205	1345	1275	995	-	-	995	930	1200	1295	1165	950	-	-
TCF22X10S-22	935	970	965	820	-	-	-	-	965	980	920	775	-	-	-	-
TCF22X12S-22	1065	1085	1070	920	-	-	-	-	1095	1090	1035	870	-	-	-	-
TCF22X14S-22	1000	985	975	930	830	-	-	-	1010	970	930	865	775	-	-	-
TCF22X12L-23	1195	1275	1270	1040	-	-	-	-	1195	1225	1160	945	-	-	-	-

Above refers to standard configurations, contact Airedale for other options.

Installation Data

Point Loadings

Freecool

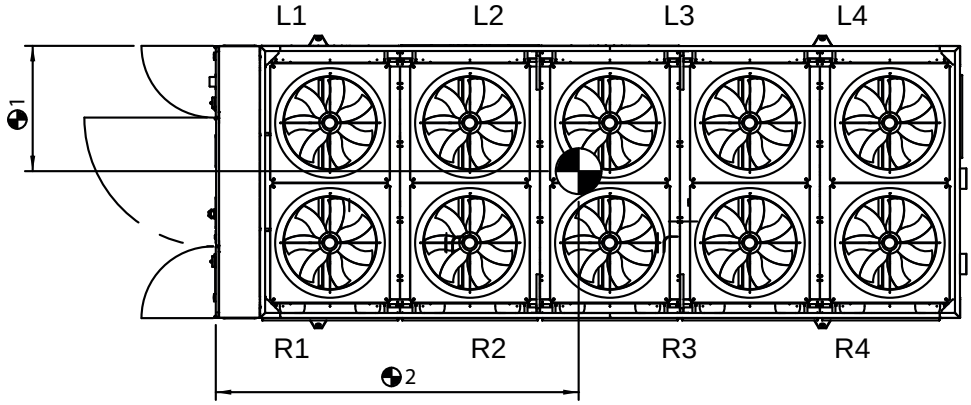

	Standard Unit Point Loads															
	L1 (kg)	L2 (kg)	L3 (kg)	L4 (kg)	L5 (kg)	L6 (kg)	L7 (kg)	L8 (kg)	R1 (kg)	R2 (kg)	R3 (kg)	R4 (kg)	R5 (kg)	R6 (kg)	R7 (kg)	R8 (kg)
TCF22X14L-23	1125	1155	1150	1070	930	-	-	-	1100	1090	1045	950	830	-	-	-
TCF22X16L-23	1160	1210	1275	1240	1065	-	-	-	1130	1150	1155	1095	955	-	-	-
TCF22X18L-23	1075	1090	1120	1140	1075	950	-	-	1040	1030	1025	1015	950	855	-	-
TCF22X20L-23	1125	1140	1220	1280	1205	1080	-	-	1090	1065	1095	1110	1050	955	-	-
TCF23X12S-24	1100	1265	1360	1205	-	-	-	-	1140	1255	1275	1100	-	-	-	-
TCF23X14S-24	1065	1130	1180	1115	980	-	-	-	1085	1120	1115	1020	895	-	-	-
TCF23X16S-25	1165	1210	1275	1230	1055	-	-	-	1175	1190	1195	1115	955	-	-	-
TCF23X18S-25	1025	1025	1100	1165	1105	985	-	-	1030	1010	1045	1065	995	895	-	-
TCF23X18L-28	1095	1130	1235	1315	1250	1100	-	-	1095	1095	1150	1180	1100	975	-	-
TCF23X20L-28	1235	1280	1395	1460	1375	1210	-	-	1220	1215	1275	1270	1180	1050	-	-
TCF23X22L-28	1295	1350	1495	1575	1440	1320	-	-	1260	1270	1350	1360	1240	1145	-	-
TCF23X24L-28	1365	1415	1560	1690	1610	1435	-	-	1315	1310	1385	1450	1375	1245	-	-
TCF24X16S-26	1230	1315	1460	1485	1260	-	-	-	1260	1315	1390	1350	1145	-	-	-
TCF24X18S-26	1145	1180	1260	1305	1230	1080	-	-	1165	1175	1210	1205	1110	970	-	-
TCF24X20S-26	1230	1270	1395	1475	1395	1230	-	-	1215	1230	1305	1315	1230	1095	-	-
TCF24X22S-27	1290	1340	1485	1590	1460	1335	-	-	1265	1275	1375	1405	1290	1195	-	-
TCF24X24S-27	1410	1455	1600	1695	1585	1410	-	-	1370	1375	1465	1490	1385	1245	-	-
TCF24X22L-21	1305	1355	1505	1605	1470	1350	-	-	1280	1300	1400	1435	1315	1210	-	-
TCF24X24L-21	1425	1475	1620	1715	1605	1425	-	-	1385	1400	1490	1515	1405	1265	-	-

Above refers to standard configurations, contact Airedale for other options.

Installation Data

Unit Lifting

- Employ lifting specialists.
- Local codes and regulations relating to the lifting of this type of equipment should be observed.
- Use the lifting eye bolts/lifting lugs provided.
- Attach lifting chains to each of the lifting eye bolts/lifting lugs provided; each chain and eye bolt must be capable of lifting the whole chiller.
- Lifting hole/lug dimension: 40mm.
- Use the appropriate spreader bars/lifting slings with the holes/lugs provided.
- Lift the unit slowly and evenly.
- If the unit is dropped, it should immediately be checked for damage and reported to Airedale.

CAUTION ⚠	The unit should be lifted from the base and where possible, with all packing and protection in position. If any other type of slinging is used, due care should be taken to ensure that the slings do not crush the casework or coil.

Lifting Dimensions

4 Point

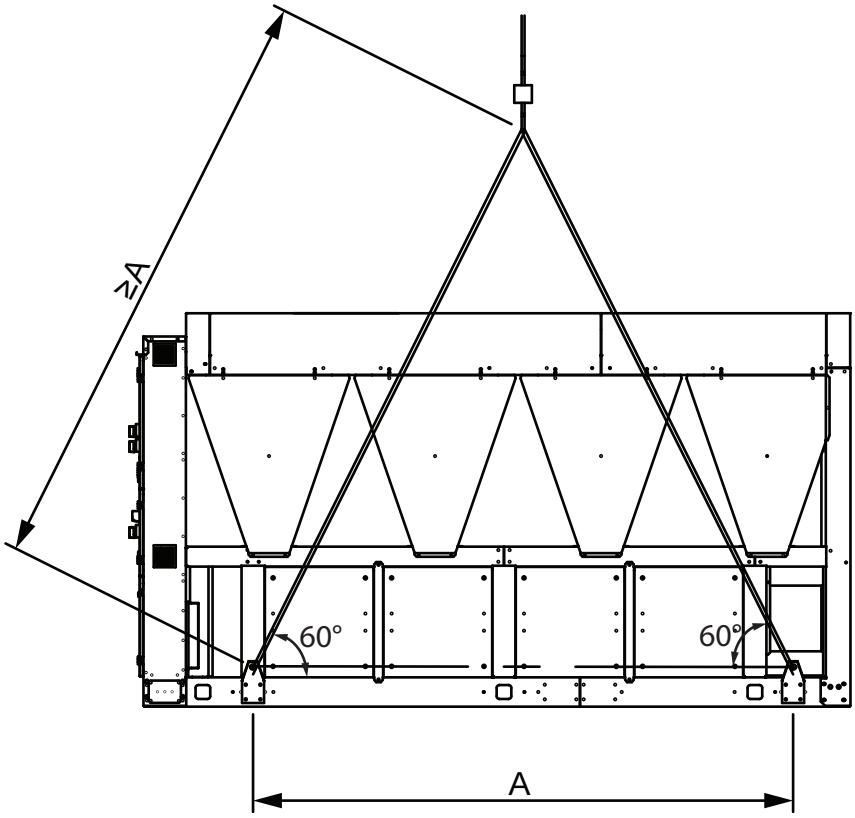

Number of Fans	Liftng Lug Size	A (mm)
4 Fan Unit	35	1533
6 Fan Unit	35	2332
8 Fan Unit	35	3464
10 fan Unit	35	4077

Installation Data

Lifting Dimensions

8 Point

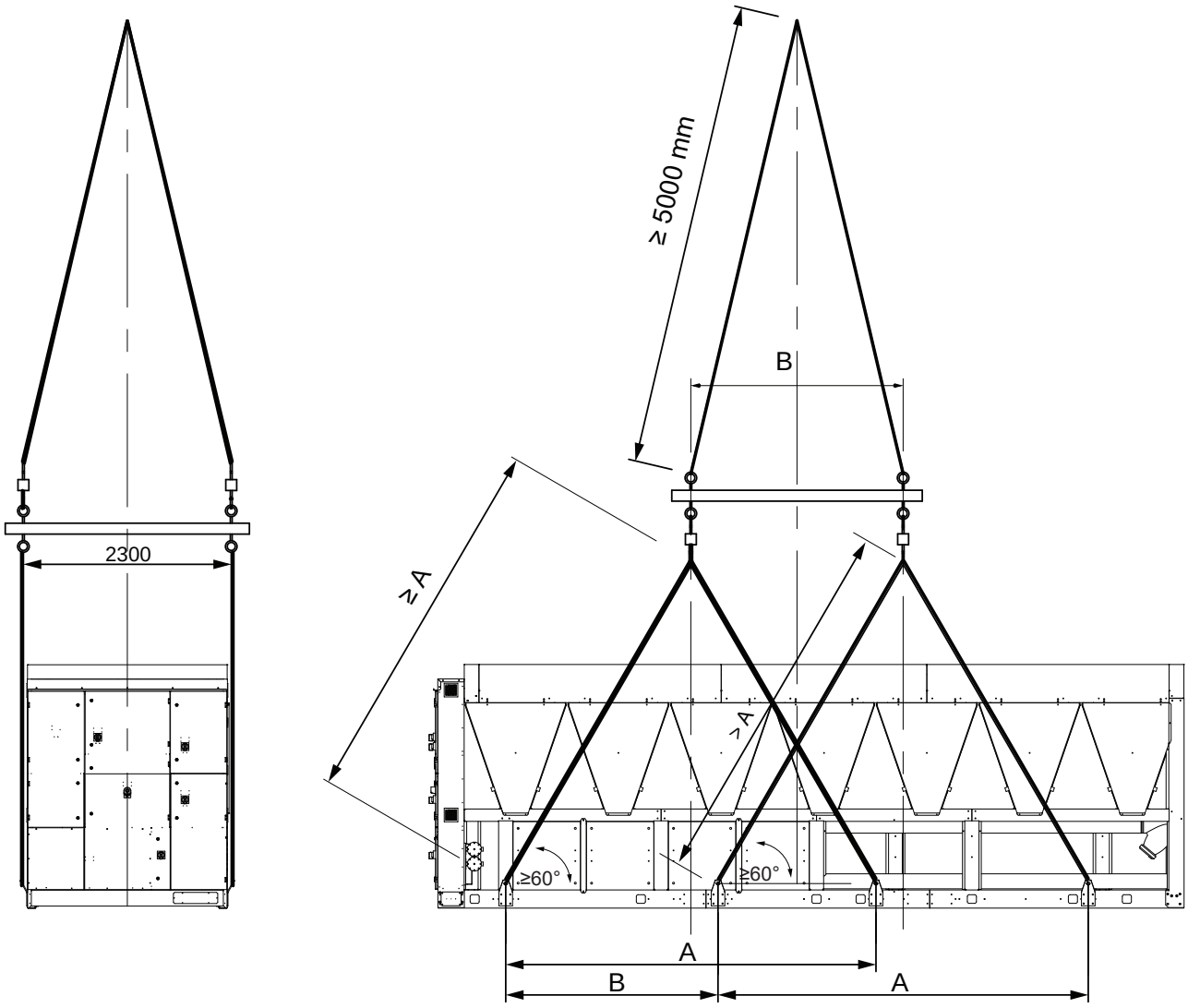

Number of Fans	Lifting Lug Size	Single Circuit Machines		Dual Circuit Machines	
		A (mm)	B (mm)	A (mm)	B (mm)
12 Fan Unit	35	3600	1536	3600	1490
14 Fan Unit	35	4500	1536	4500	1536
16 Fan Unit	35	4300	3100	4300	3100
18 Fan Unit	35	5500	2800	5200	2968
20 Fan Unit	35	6500	3164	6500	3139
22 Fan Unit	35	–	–	6650	3966
24 Fan Unit	35	–	–	6650	4950

Installation Data

General Arrangement

4 Fan

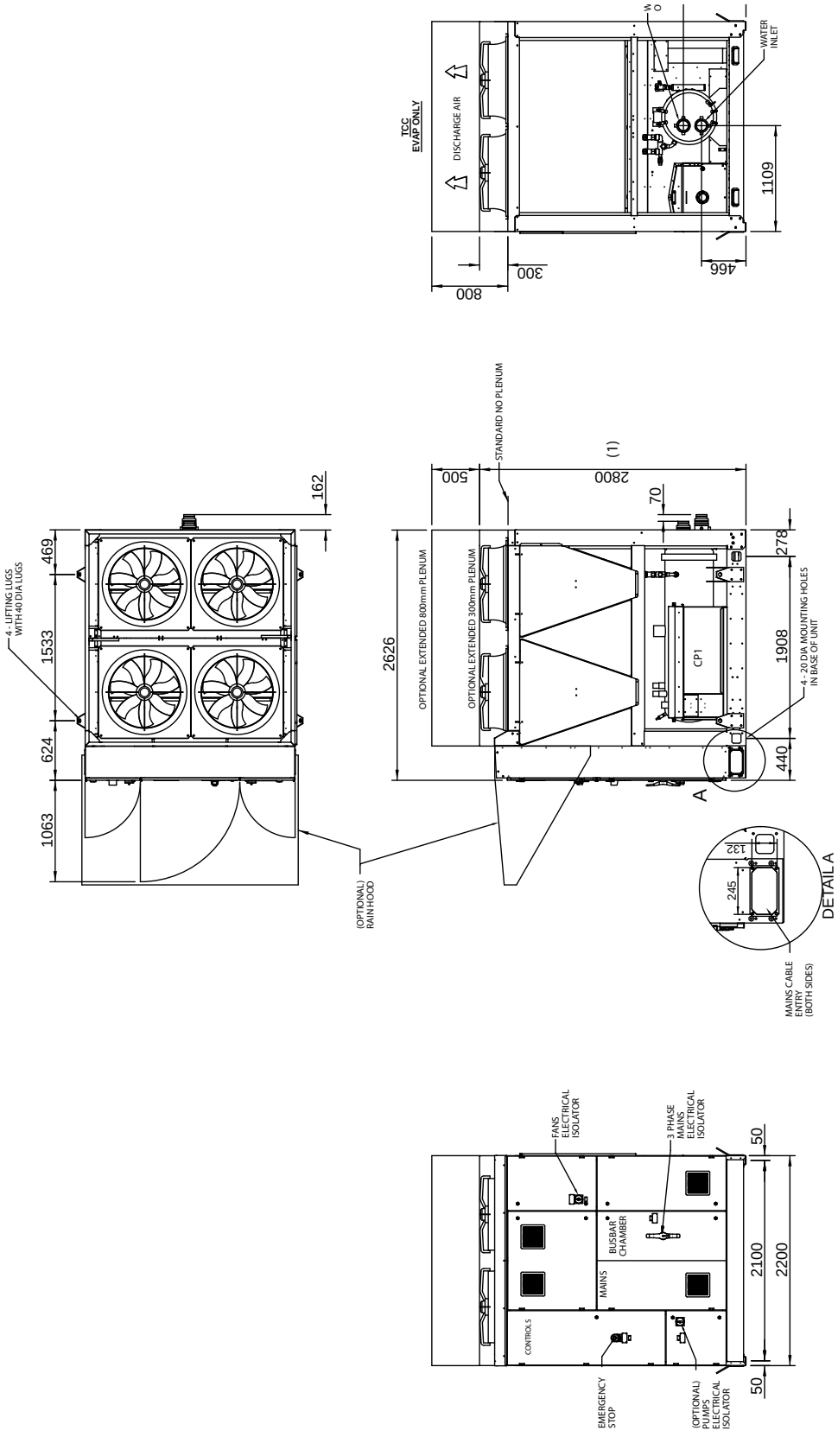

Installation

Installation Data

General Arrangement

6 Fan

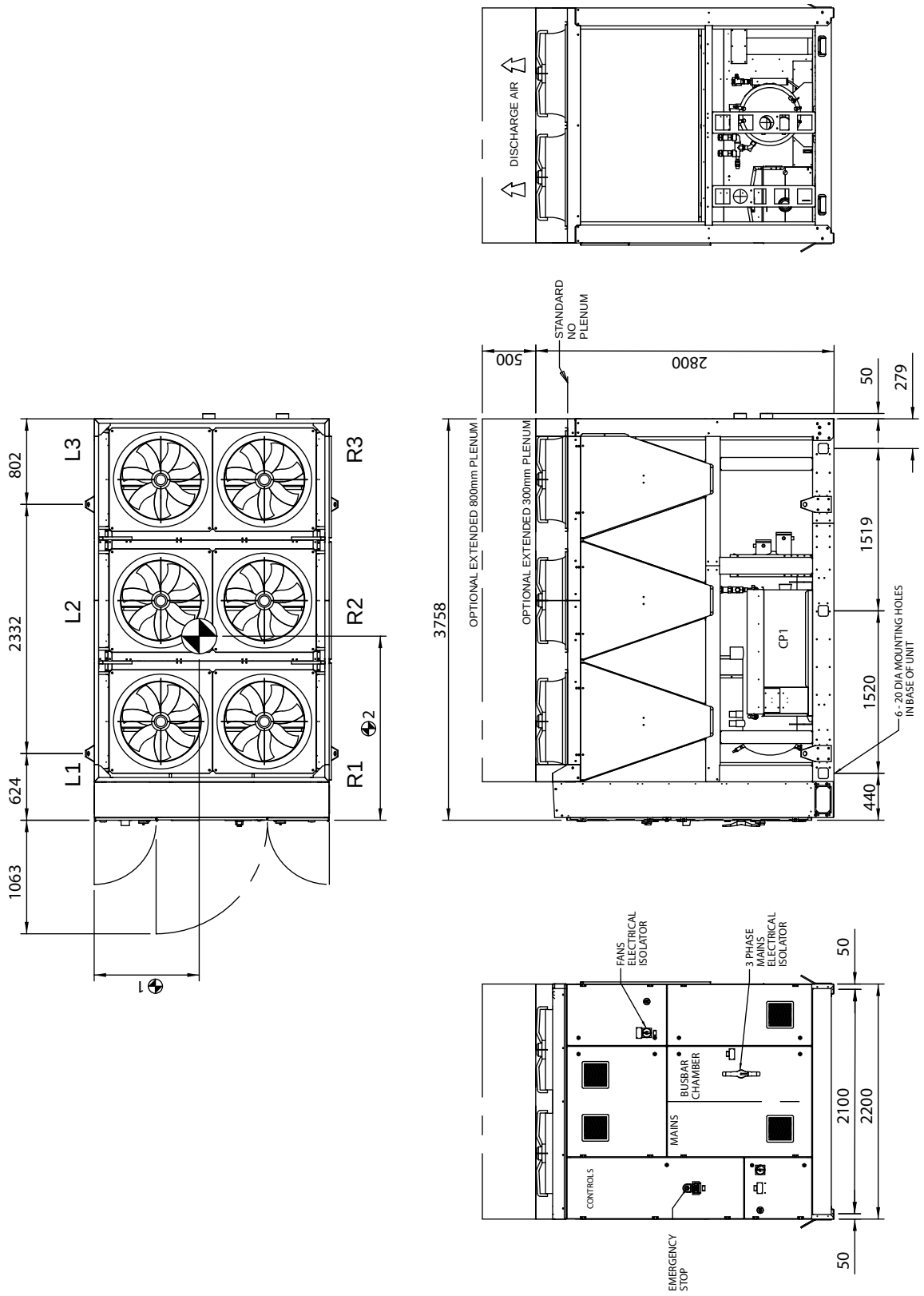

Installation Data

General Arrangement

8 Fan

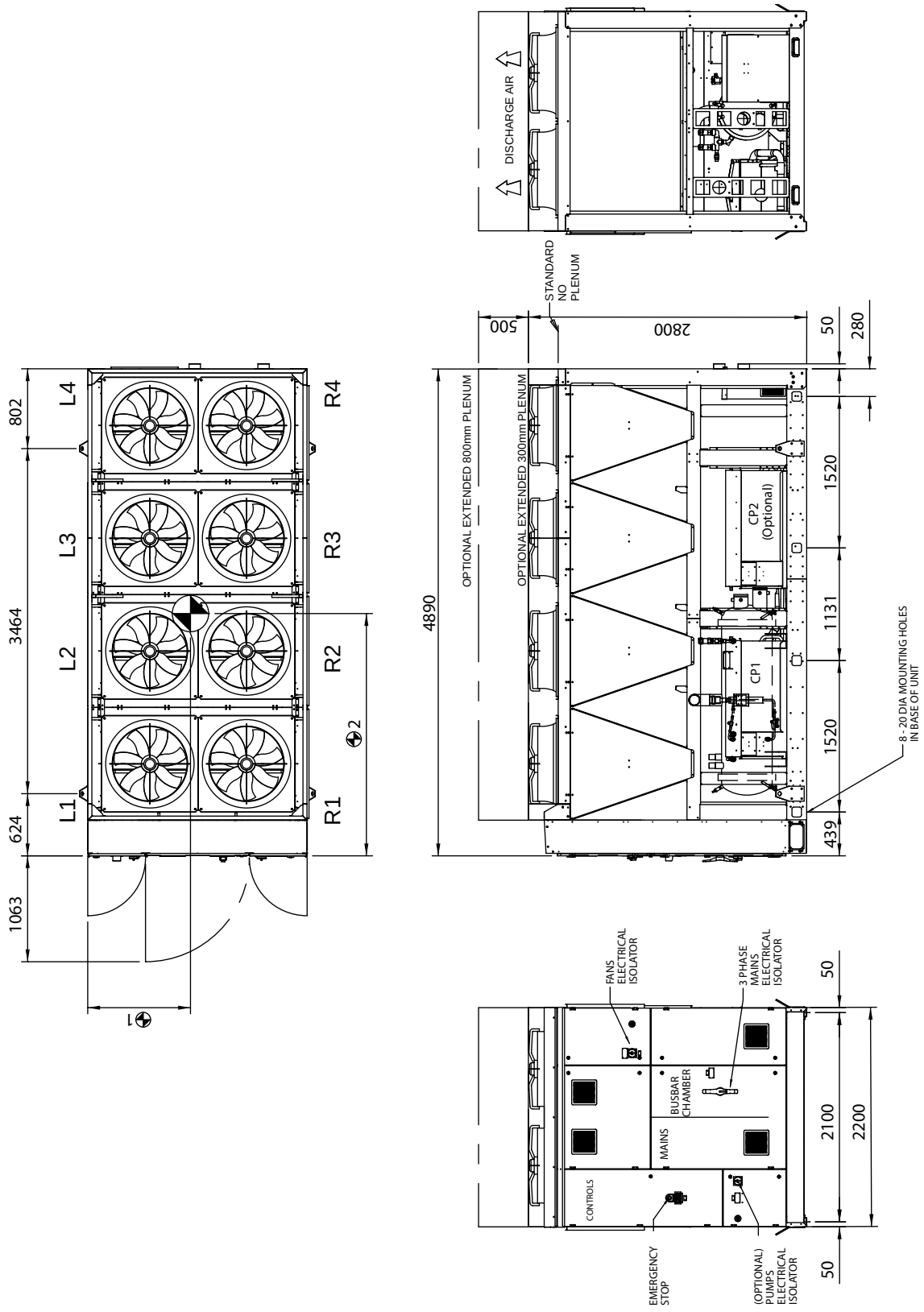

Installation

Installation Data

General Arrangement

10 Fan

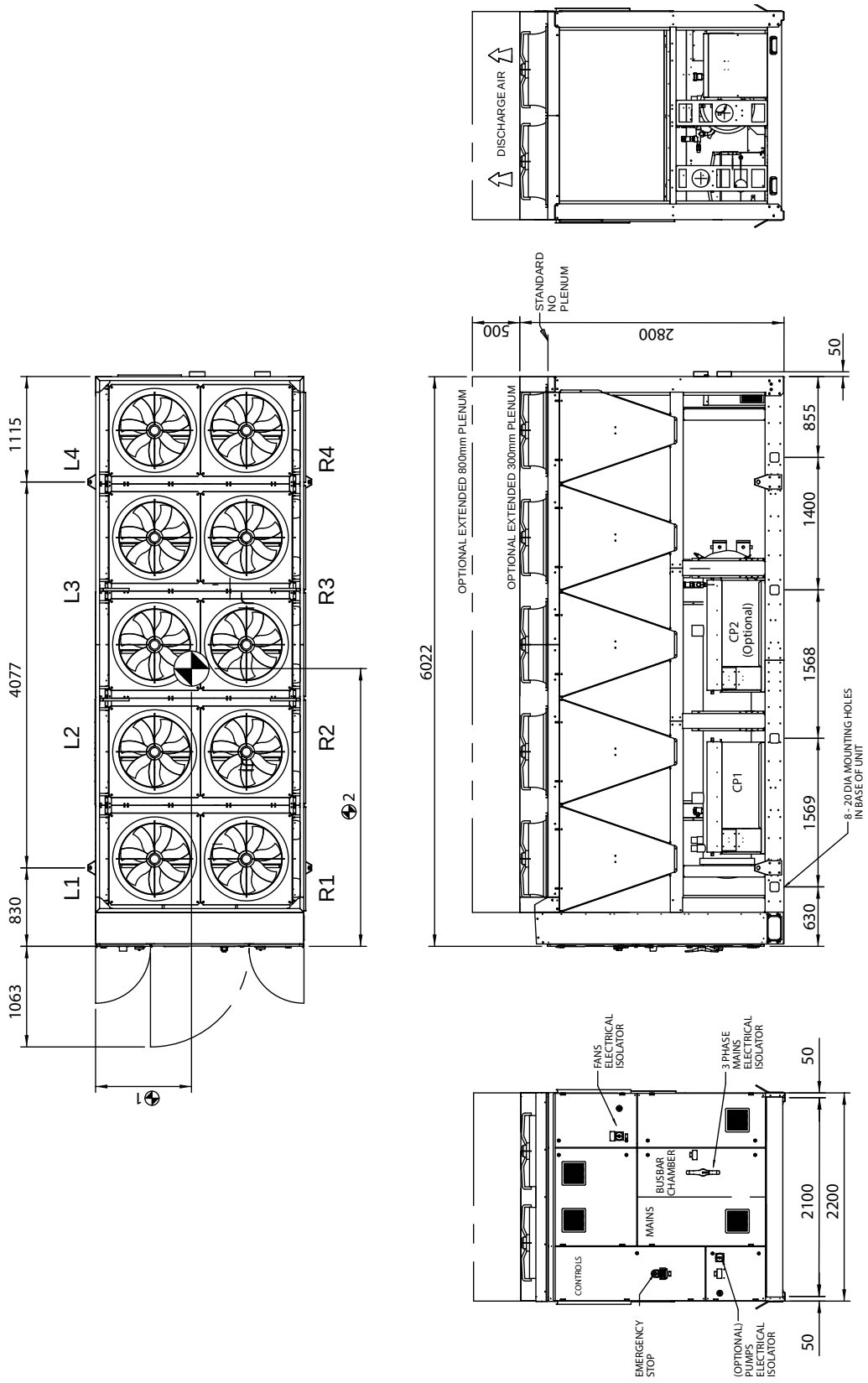

Installation Data

General Arrangement

12 Fan Single Circuit

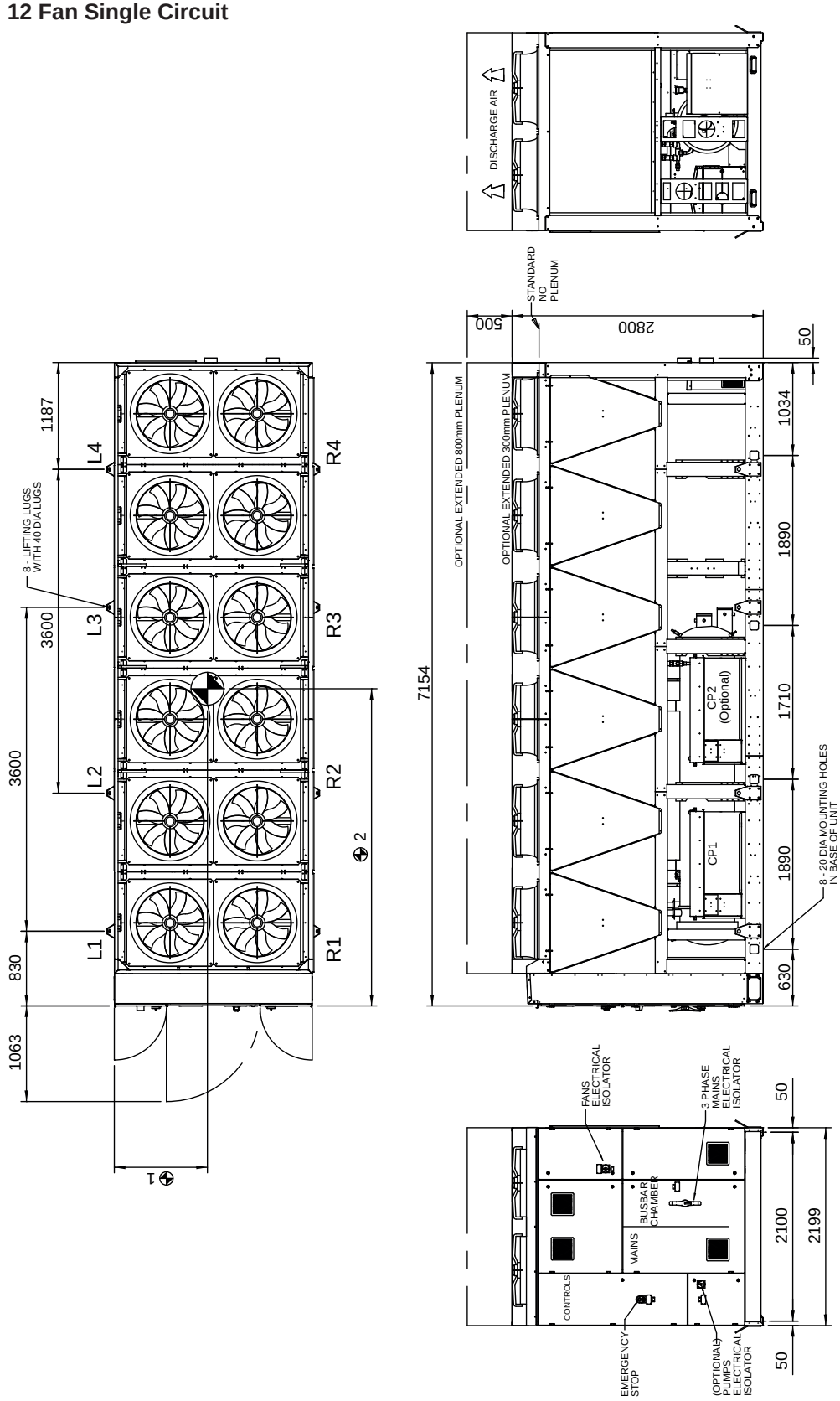

Installation

Installation Data

General Arrangement

12 Fan Dual Circuit

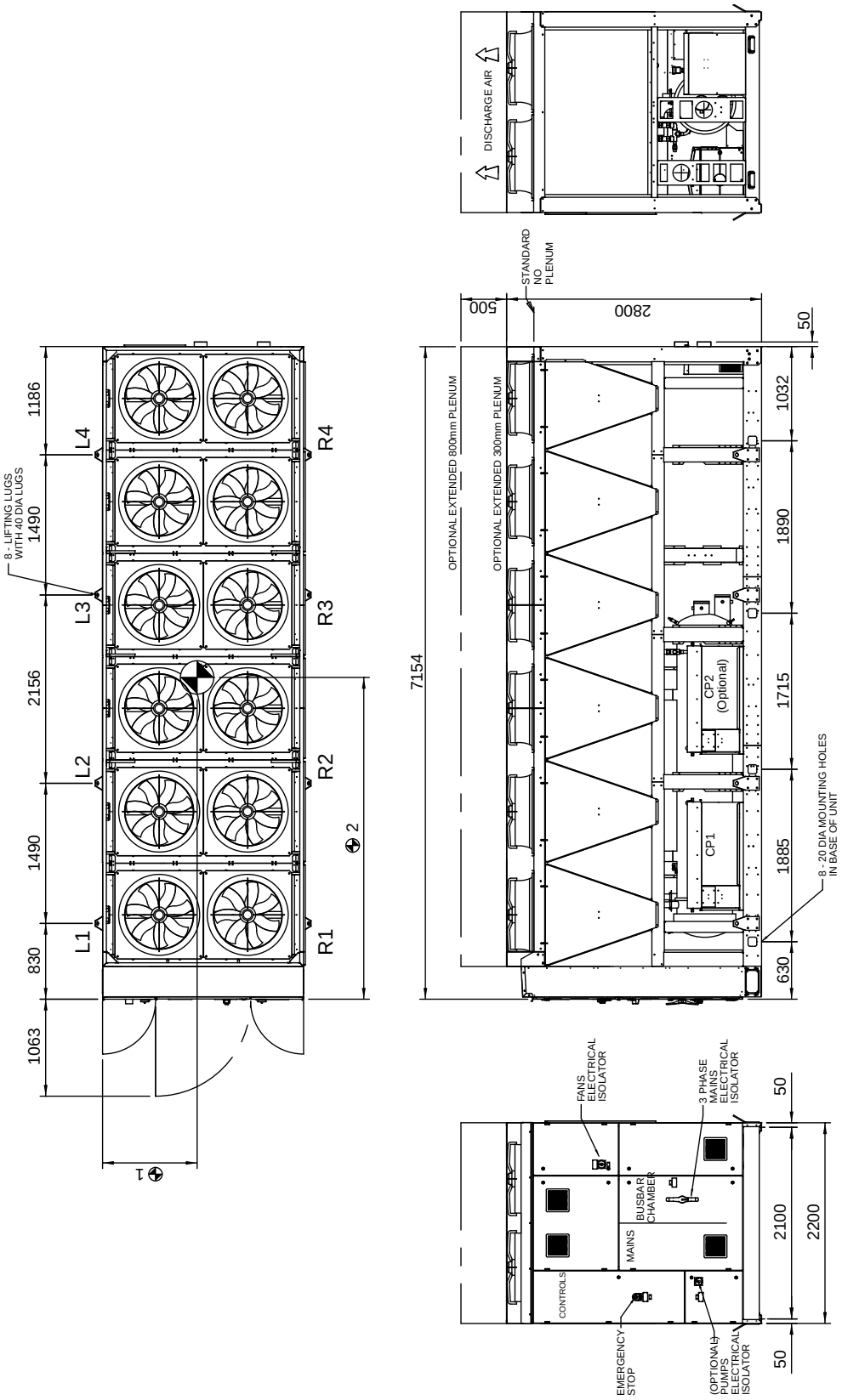

Installation

Installation Data

General Arrangement

14 Fan Single Circuit

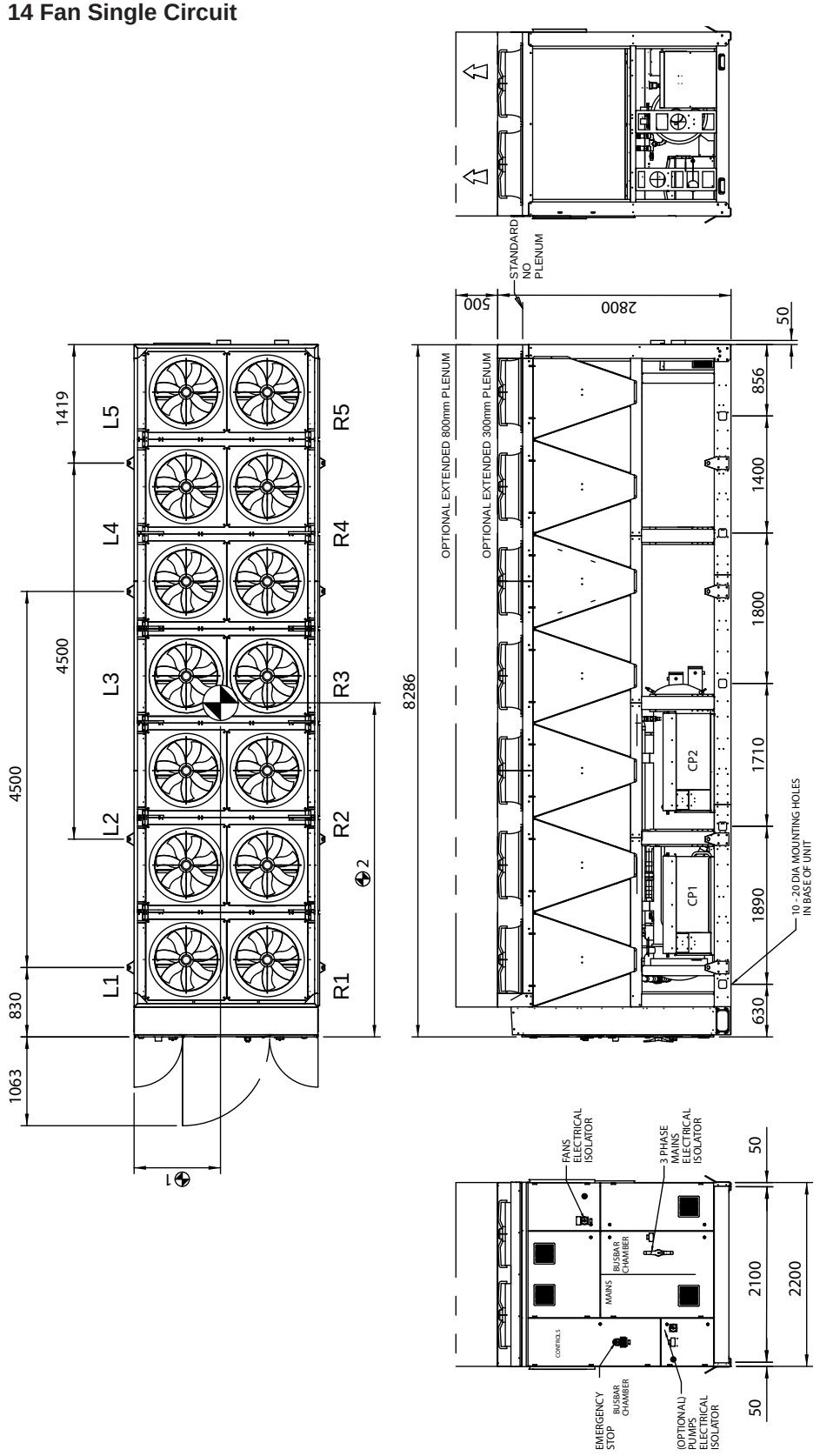

Installation

Installation Data

General Arrangement

14 Fan Dual Circuit

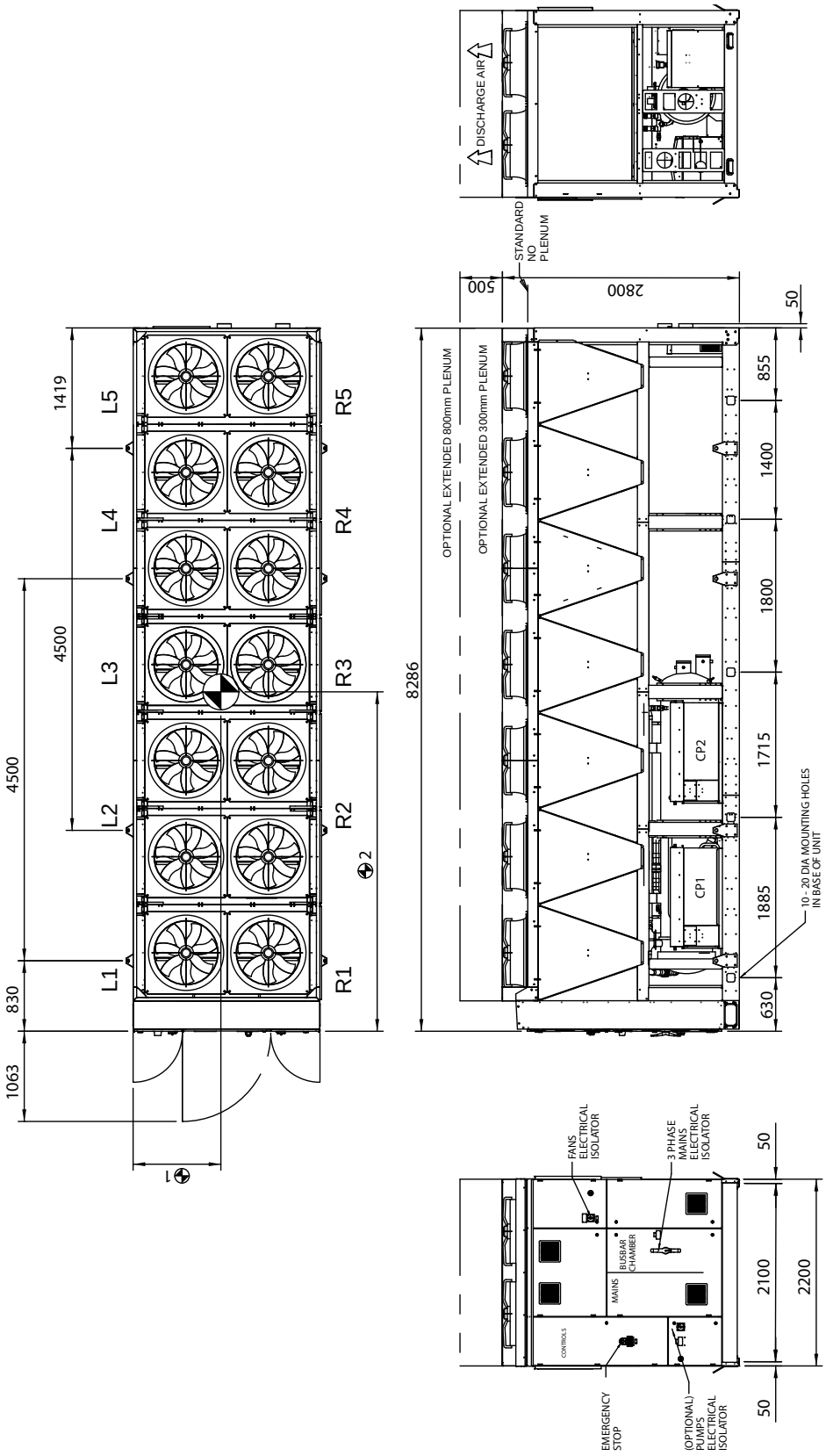

Installation Data

General Arrangement

16 Fan Single Circuit

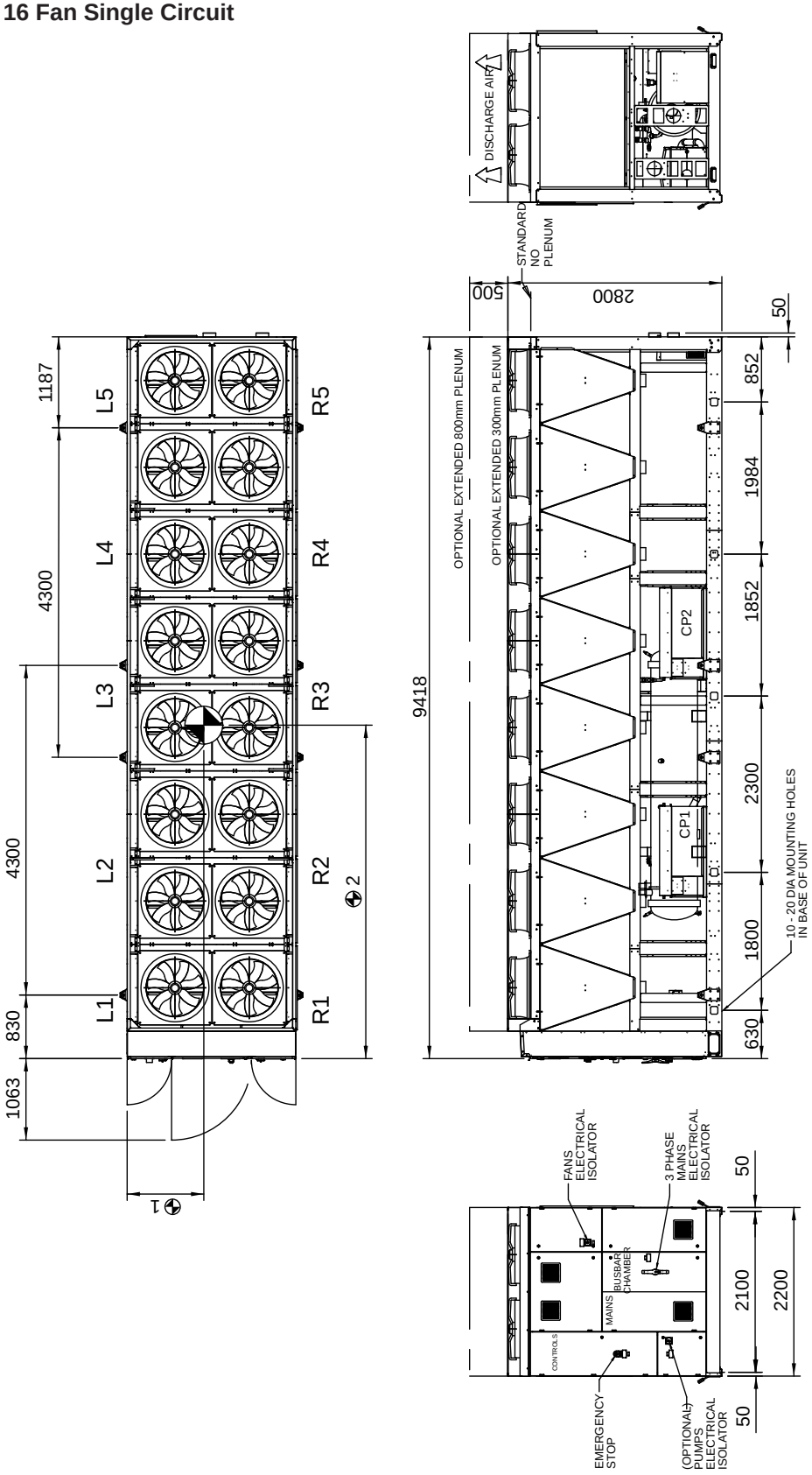

Installation

Installation Data

General Arrangement

16 Fan Dual Circuit

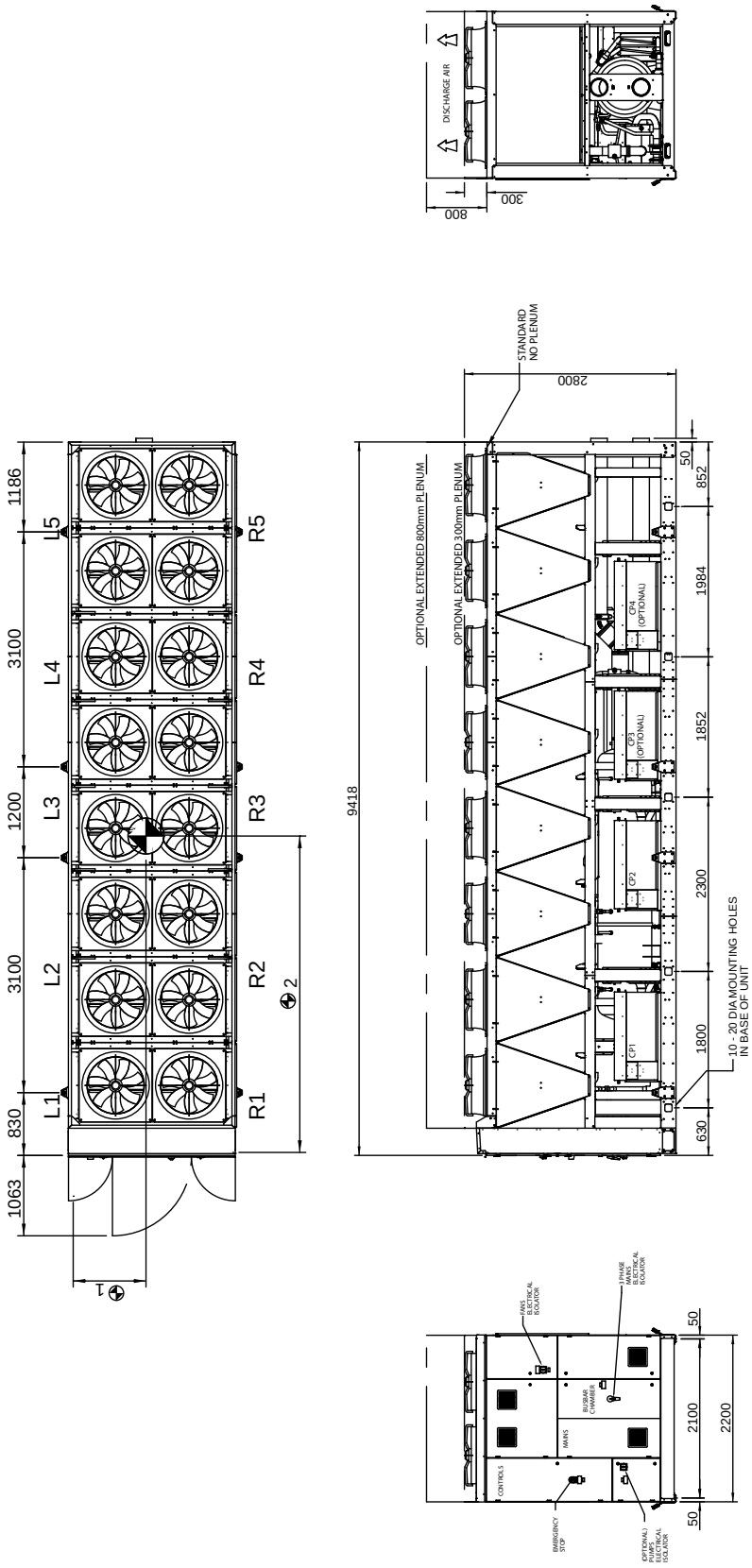

Installation

Installation Data

General Arrangement

18 Fan Single Circuit

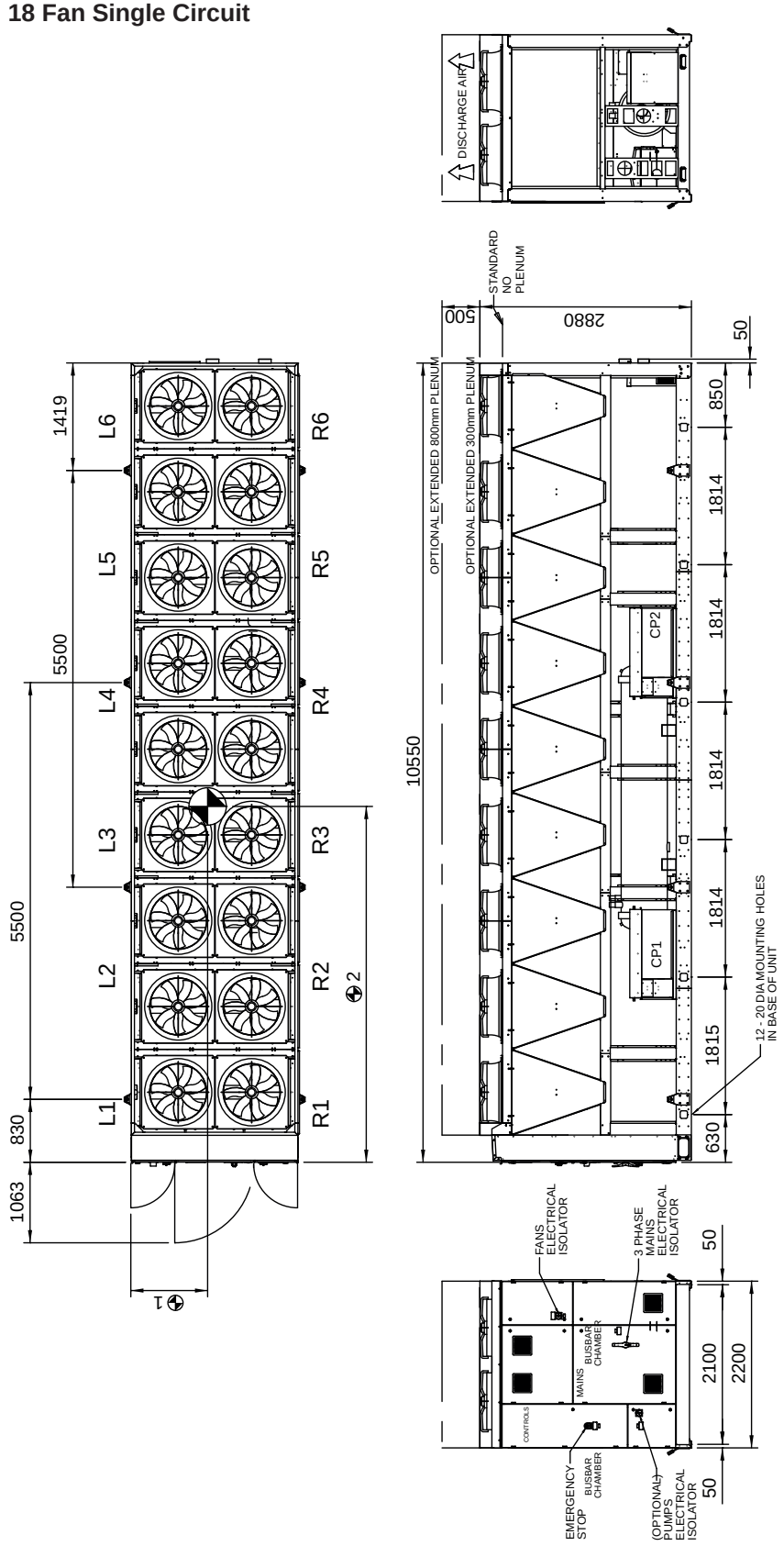

Installation

Installation Data

General Arrangement

18 Fan Dual Circuit

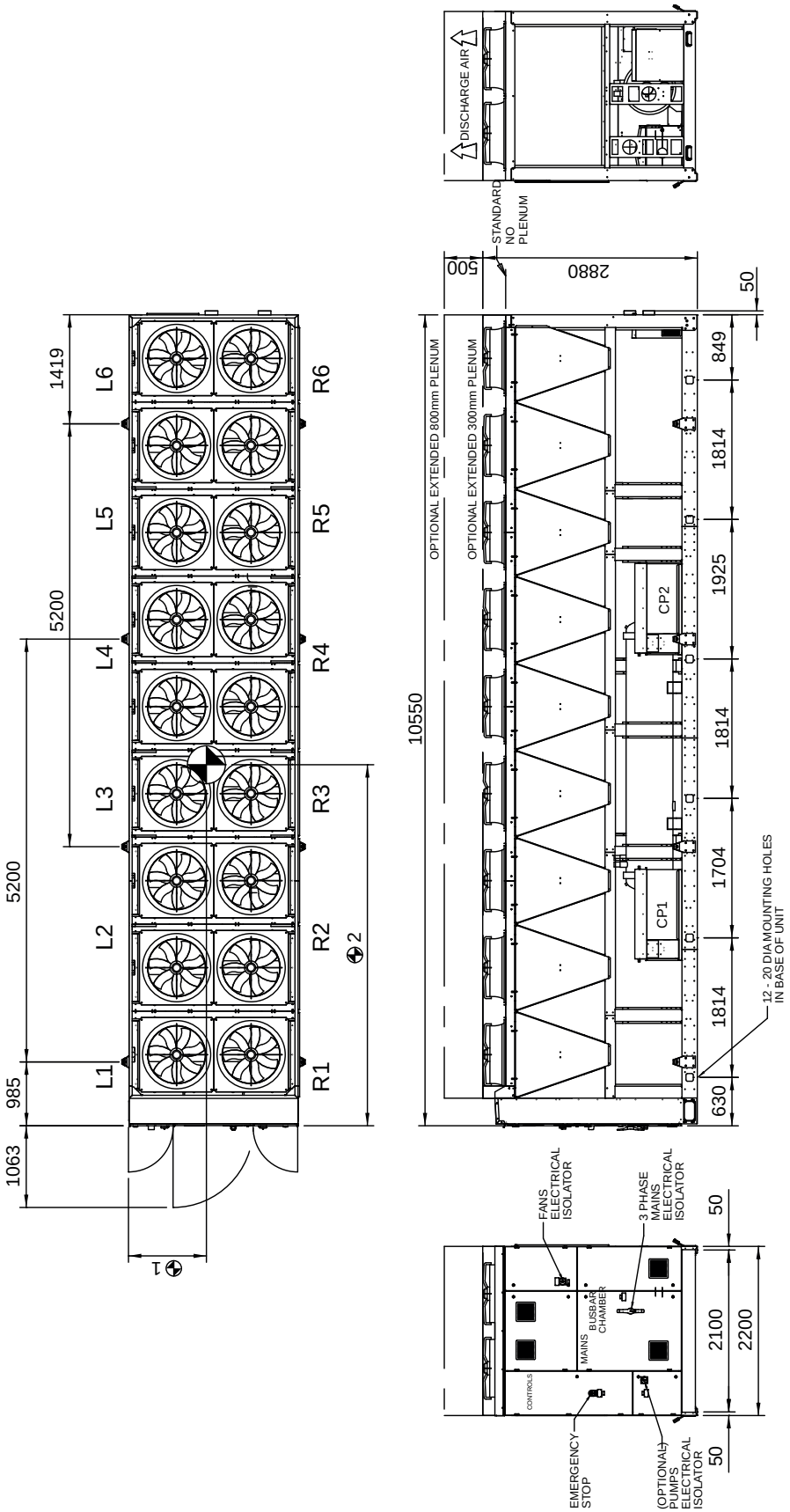

Installation Data

General Arrangement

20 Fan Single Circuit

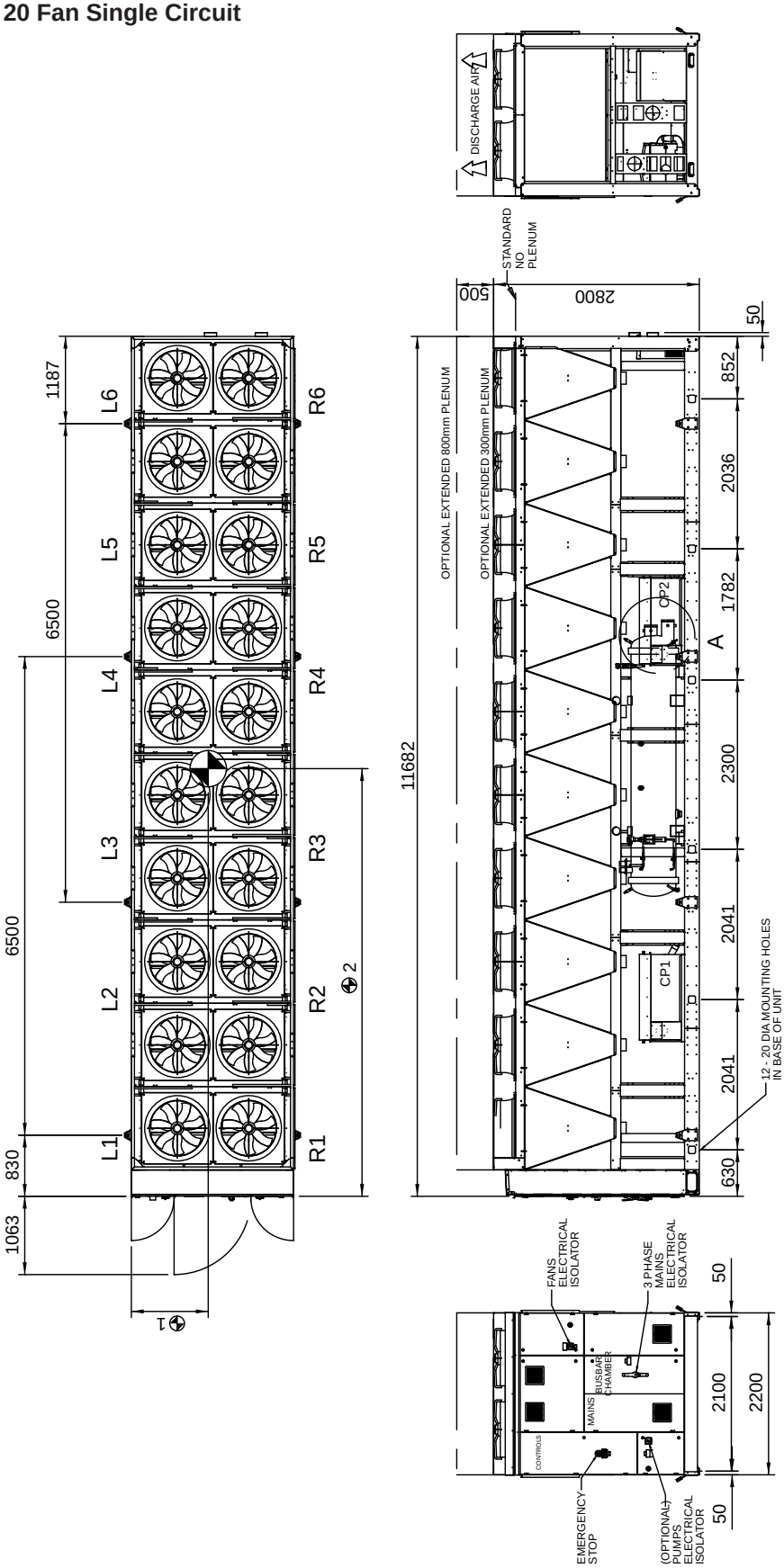

Installation

Installation Data

General Arrangement

20 Fan Dual Circuit

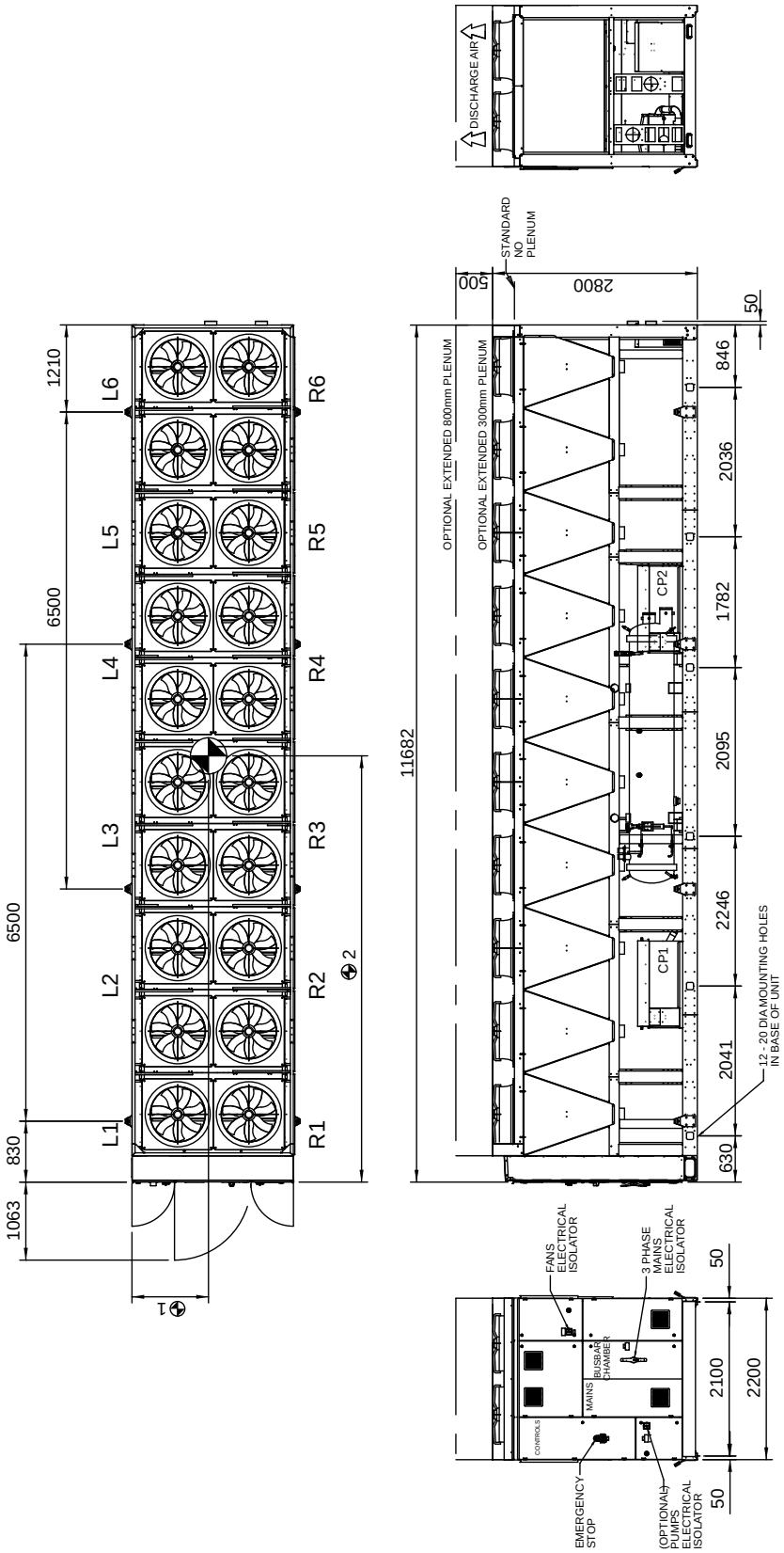

Installation

Installation Data

General Arrangement

22 Fan Dual Circuit

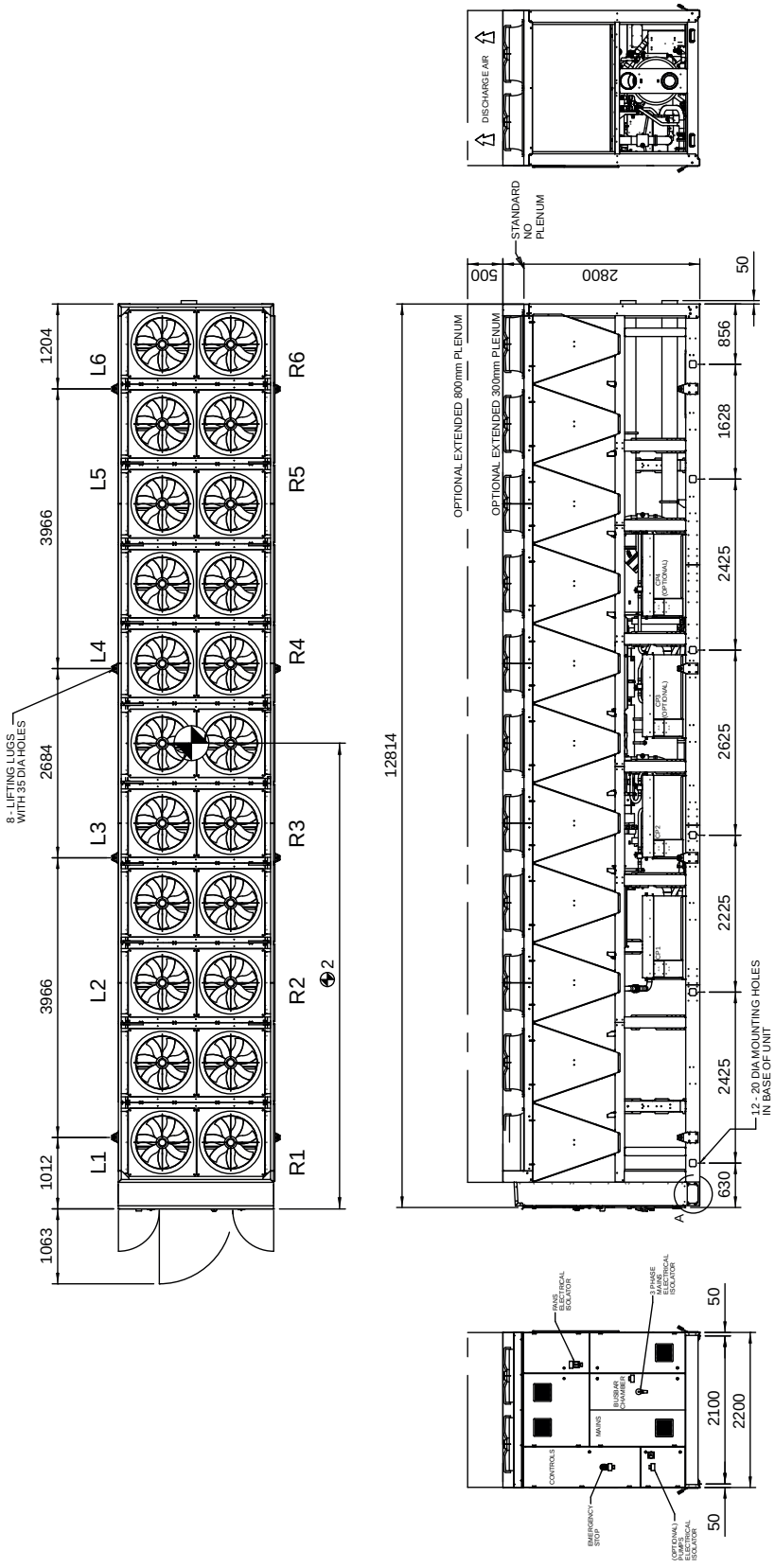

Installation

Installation Data

General Arrangement

24 Fan Dual Circuit

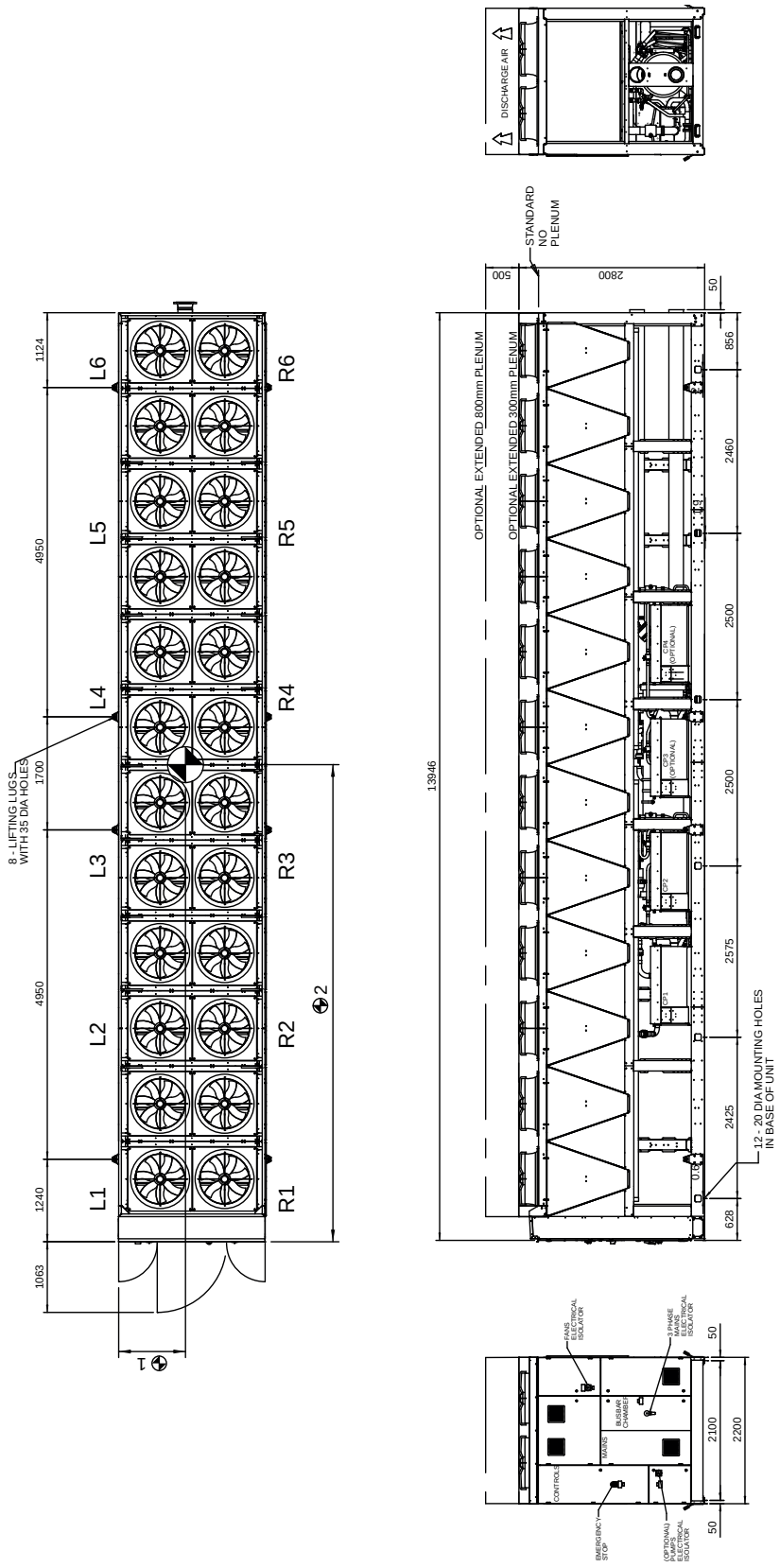

Installation

Installation Data

Positioning

The installation position should be selected with the following points in mind:

- Position on a stable and even base, levelled to ensure that the compressor operates correctly.
- Levelling should be to +/- 5mm.
- Where vibration transmission to the building structure is possible, fit spring anti-vibration mounts and flexible water connections.
- Observe airflow and maintenance clearances.
- Pipe work and electrical connections are readily accessible.
- Where multiple units are installed, due care should be taken to avoid the discharge air from each unit adversely affecting other units in the vicinity.
- Within a side enclosed installation, the fan MUST be higher than the enclosing structure.
- Increase airflow and maintenance clearances for side-enclosed or multiple unit applications.
- Ensure there are no obstructions directly above the fans.
- Allow free space above the fans to prevent air recirculation.
- If the unit is installed in particularly windy locations, the provision of wind breaks may be required. For such applications a vertical discharge unit is recommended or where horizontal airflow could be obstructed.

Airflow & Maintenance Clearances

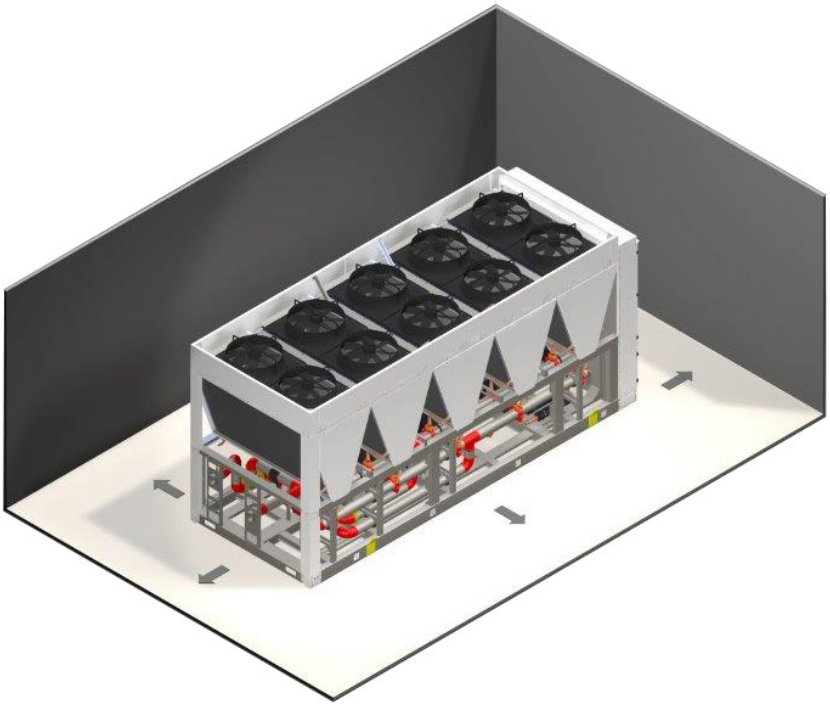

Application	Distance from Overall Base Dimension
Single unit	1300mm
Side-enclosed or multiple units	2600mm

Installation Data

Anti Vibration Mounting (Optional)

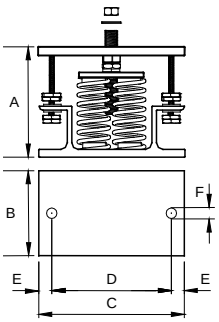

Spring Type

Each mount is coloured to indicate the different loads, refer to instructions supplied for correct allocation.

Dimensions

	A(1)	B	C	D	E	F
TCC / TCF Units	162	130	225	186	20	16

(1) Unloaded dimension

Components

1	Locating Screw	6b	Lower Retaining Nuts
2	Retaining Nut & Washer	7	Spring Assembly
3	Levelling Screw	8	Pressure Plate
4	Levelling Lock Nut	9	Top Plate
5	Retaining Studs	10	Bolting-down Holes
6a	Upper Retaining Nuts		

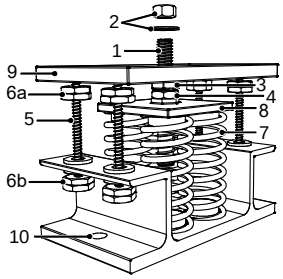

Installation

1. Locate and secure mount using bolting down holes (10) in base plate.
2. Ensure mounts are located in line with the unit base.
3. If applicable, remove compressor enclosure covers to allow access to mount fixing holes in the unit base.
4. Lock the upper retaining nuts (6a) to the underside of the top plate (9) before a load is applied.
5. Slacken levelling lock nut (4). (the levelling screw will not move if this is not slackened)
6. Remove retaining nut and washer (2), lower the unit onto the mounts and replace retaining nut and washer.

Beginning with the mount with the largest deflection adjust the height of each mount using the levelling screw (3). Mountings must be adjusted incrementally in turn.

CAUTION ⚠	Do not fully adjust 1 mount at a time as this may overload and damage springs. WHEN ALL MOUNTS ARE LEVEL, LOCK EACH INTO PLACE USING THE LEVELLING LOCK NUT (4).

7. Lock all retaining nuts (6a and 6b) to the extreme ends of the retaining studs (5).

CAUTION ⚠	Do not connect any services until all anti vibration mounts have been fully adjusted.

Pad Type

Components/Installation

1. M16 Bolt (Not Supplied)
2. Washer (Not Supplied)
3. Fixing Pad 6173231
4. A V Pad 6173223
5. 2 x M16 Nut (Not Supplied)
6. Unit Base
7. Unit Mounting Plinth

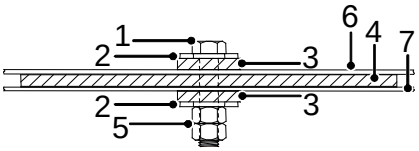

Anti Vibration Mount location to Unit and Plinth

The Anti Vibration mount is larger than the unit base. Consideration must be made with regard to steelwork / concrete plinth sizes. Full information is available on the approved General Arrangement drawings.

The base of the unit is open. Considerations must be made for service and maintenance requirements if the unit is installed on a gantry.

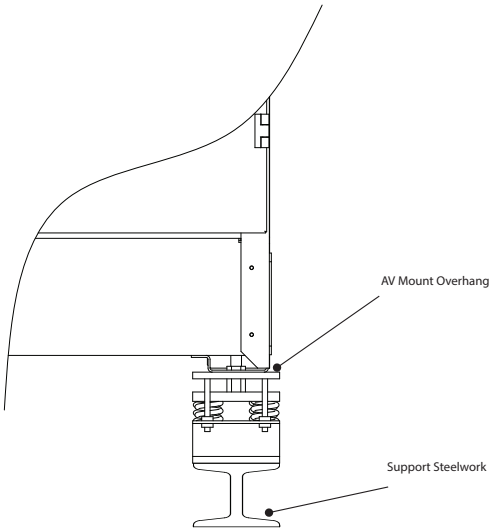

Interconnecting Wiring

General

As standard the equipment is designed for 400V, 3 phase, 3 wire 50Hz and a separate permanent 230V, 1 phase, 50Hz supply, to all relevant IEE regulations, British standards and IEC requirements.

The control voltage to the interlocks is 24V, always size the low voltage interlock and protection cabling for a maximum voltage drop of 2V.

Avoid large voltage drops on cable runs, particularly low voltage wiring.

CAUTION ⚠	A fused and isolated electrical supply of the appropriate phase, frequency and voltage should be installed. Wires should be capable of carrying the maximum load current under non-fault conditions at the stipulated voltage. A separately fused permanent single phase and neutral supply MUST BE FITTED for the evaporator trace heating and control circuits and for the leak detection and ventilation systems to work in the event of a leak being detected. FAILURE to do so will INVALIDATE WARRANTY. ALL work MUST be carried out by technically trained competent personnel. Isolate REMOTELY the mains incoming supply to the BUSBAR chamber prior to maintenance or repair work.

TURBOCHILL	**L1**	○	←		Mains Incoming Supply 400V/3PH/50Hz (Direct to 3 Phase Isolator)
	L2	○	←		
	L3	○	←		
	E	○	←		
	L4	○	←		Separate Permanent Supply 230V/1PH/50Hz (Direct to Control Panel Isolator)
	N	○	←		
	E	○	←		
	L4	○	→		External Trace Heating Connections 240V/500W max
	N	○	→		
	502	○	→	(1)	**Remote Pump Interlock 24VAC**
	508	○	←		
	502	○	→	(1)	**Evaporator Pump Water Flow Switch 24VAC**
	506	○	←		
	502	○	→		Unit Remote On/Off 24VAC
	507	○	←		
	502	○	→		Setback Setpoint Temperature Switch
	510	○	←		
	581	○	←	Non-Critical Alarm	Volt Free Common Alarm
	580	○	→		Volt Free Alarm N/O
	582	○	→		Volt Free Alarm N/C
	591	○	←	Critical Alarm	Volt Free Common Alarm
	590	○	→		Volt Free Alarm N/O
	592	○	→		Volt Free Alarm N/C
	RX-/Tx-	○	←		Network Connections (Inward Connection)
	RX+/Tx+	○	←		
	GND	○	←		
	RX-/Tx-	○	→		Network Connections (Outward Connection)
	RX+/Tx+	○	→		
	GND	○	→		

IMPORTANT ⚠	(1) MUST be directly wired to the chiller to validate warranty.

Power Quality & Harmonics

Variable speed drives are now common place due to their efficiency and versatility. Not ignoring these facts, care must be taken when installing VSD technology into new and existing installations. This is due to the effect the introduction of such technology may have on line harmonics of a buildings electrical system. VSDs by their nature cause distortion of the AC line by drawing current in pulses, rather than continuously from the supply resulting in harmonic generation. The useful power to a motor is that obtained from the fundamental frequency of 50Hz. The additional currents at the higher frequencies are not useful to the appliance and are therefore transmitted back onto the line.

Examples of other non-linear loads that cause harmonics are:-

Single phase loads, e.g.

- Switched mode power supplies
- Personal computers
- HF fluorescent ballasts
- Compact fluorescent lamps

Three phase loads, e.g.

- Variable frequency drives
- Inverters
- Large UPS systems

The distortion of the line caused by harmonics can cause the following associated issues:-

- Erroneous operation of control systems
- Nuisance tripping of circuit breakers
- Overloading of transformers
- Overloading of capacitors
- Overvoltage problems
- Excessive currents in neutral conductor

The 3rd, 5th, 7th and 9th harmonics are considered to be the predominant frequencies produced by non-linear loads. To minimize the harmonic effect, each Turbocor compressor is fitted with a 5% line reactor to help reduce the harmonics and improve the displacement power factor above 0.95[(1).] However, to further reduce the effects and to help meet limits for engineering recommendation (ER) G5/4, the following guidelines can be followed.

Current Harmonics

Harmonic currents contribute to system losses. Mitigation measures can be implemented in the following ways:

a) Install passive/active harmonic filters.

b) Install the unit as far from the source transformer as possible.

Voltage Harmonics

Harmonic voltage distortion causes disturbance to other loads and increases losses in them. Methods for harmonic voltage reduction can be achieved in the following ways:

a) Increase the size of the supply transformer.

b) Connect the unit to a point with a high fault level (low impedance).

c) Keep the unit as far from the point of common coupling (PCC) as possible.

Engineering Recommendation G5/4

It is important to understand that G5/4 is effectively an “Installation Standard” and applies to the total harmonic generating equipment installed by a consumer. G5/4 identifies consumers by their PCC to the supply and applies limits at that point. G5/4 is not a product or equipment standard and therefore no single item of equipment can be said to comply.

Note: (1) Based at full load conditions.

Liquid Level Sensor

The liquid level sensor is designed to measure the amount of refrigerant inside the flooded evaporator of a Turbochill and send a current signal between 4 and 20mA to the microprocessor.

This signal is used by the controller to control the flow of refrigerant into the evaporator for optimal and energy efficient performance. The liquid level sensor will be calibrated and located on the evaporator upon dispatch of the unit. However in the following section there is a quick guide on how to reset and recalibrate the sensor.

Step 1	Connect the USB cable (HBxC-USB) to the laptop. Connect the cable to the sensor. Open the HBLC Tool software.

Step 2	Once the following dialog is open, press “Start Scan for Sensor”.

Step 3	Once detected then the tool shown in Figure 3 will open. Change all parameters as per Figure 3 ensuring all avalible boxes are ticked.

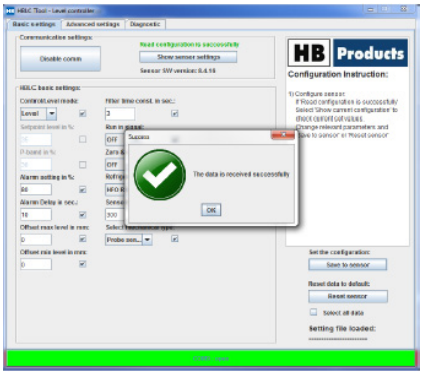

Step 4	Press the “Advanced Settings” tab, all setting stay the same as upon arrival.
Step 5	Click the “Save to sensor” button shown in Figure 4. Once the upload is complete Figure 5 will be shown and the program can be closed.

Installation

Pre Start Checks

CAUTION ⚠	ALL work MUST be carried out by technically trained competent personnel. The equipment contains live electrical and moving parts, ISOLATE prior to maintenance or repair work.

Water Flow

Make sure that you have the correct water flow rate before turning the unit on. (Refer to commissioning documentation)

CAUTION ⚠	If the unit is operated without water the unit will be damaged.

Shut Off Valves

All shut off valves must be opened prior to starting unit.

Electrical Power Supply

The power supply to the unit must be correct to design. The three phase power must be of correct phase orientation. A

CAUTION ⚠	The L4 permanent supply also provides power to the leak detector and compressor ventilation fans. Check phase rotation of electrical supply prior to running the compressor as it's direction sensitive.

Visual Inspection

Check that the unit is of satisfactory condition and that it has not been damaged.
A damaged component could indicate a reason why the unit is not operating. For example: A refrigerant leak etc.

Electrical Overloads

Check that circuit breakers are all turned on. If not investigate why they have tripped. This could be the reason why the unit has turned off.

pCO5+ Built In Display and Keypad

The in-built display is equipped with LCD display (8 rows x 22 columns) with 6 buttons.

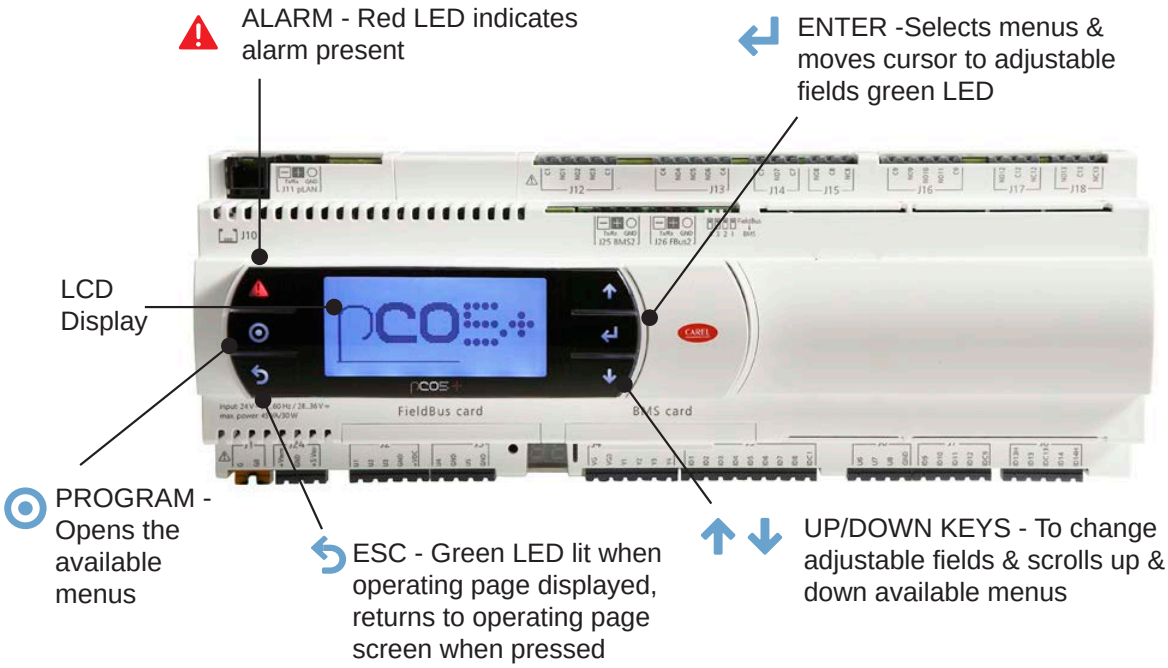

Display/Keypad

1		UP/DOWN KEYS - to change adjustable fields & scrolls up & down available menus
2		ENTER - selects menus & moves cursor to adjustable fields blue led
3		ESC - green LED lit when operating page displayed, returns to operating page screen when pressed
4		PROGRAM - opens the available menus
5		ALARM - red LED indicates alarm present
6		8 ROW LCD DISPLAY
7		CURSOR (FLASHING) Top left position = “HOME” indicates adjustable fields

Monitoring

The microprocessor also monitors and displays the following measured parameters:

- Supply water temperature
- Return water temperature
- Suction pressure of each circuit
- Liquid pressure of each circuit
- Suction temperature at each circuit
- Superheat for each circuit

Operation

Unit Operation

The unit must not be started unless the pre start checks have been carried out.

Restarting the Unit

To turn the unit on press the key to enter the program menu.

Using the or keys select the Unit On/Off option and press :

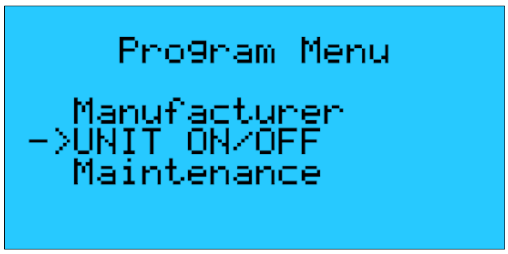

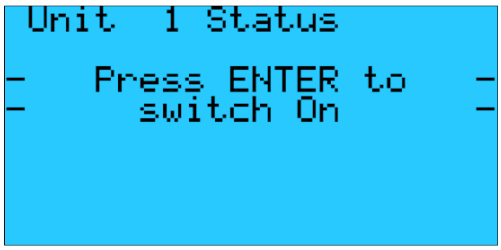

When is pressed the above screen will be shown.

To turn the unit on simply press the key again and the screen will change:

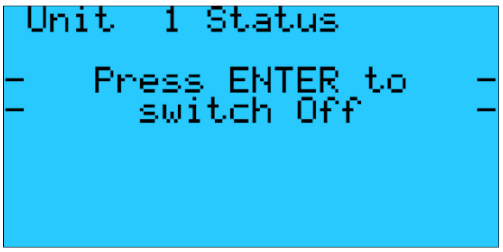

CAUTION ⚠	The chiller will be going through its start-up sequence. Pressing will turn the unit off.

Once the screen has changed to the above press the key which will return back to the main screen

Operation

Changing the Setpoint

To change the set point of the unit from the main screen press the button.

Use the and to scroll to the set point option as shown below and press

```
     Program Menu

  Clock
->SETPOINT
  User
```

The following screen will be shown:

```
                          S1
Current Supply Temp.
Setpoint:            7.0%
```

Using the or button scroll to the password screen

```
 Setpoint                 S2
Password

                  ****
```

Enter the password 4648 using the and keys and press after each number is entered. (The numbers start at 5555. So down one to 4, up one to 6 etc).
When the final number is entered the screen will jump to the set point adjustment screen:

```
                          S3
Supply Temperature
Setpoint:            7.0%
Deadband:            0.0%

Proportional Band:  8.0
Integral Time:      300s
Derivative Time:     15s
```

To adjust the set point press the key to highlight the set point, using the and keys enter the required set point and press the key until the cursor returns to the top of the screen.

Enabling Pumps

Pump Start-Up

Use the start-up guide for the general setting of the pump controller including the setting of the correct direction of rotation.
The start-up guide will be started the first time when the controller is connected to a supply voltage.

It can be restarted in the menu under GENERAL. Please note that in this case all previous settings will be erased.

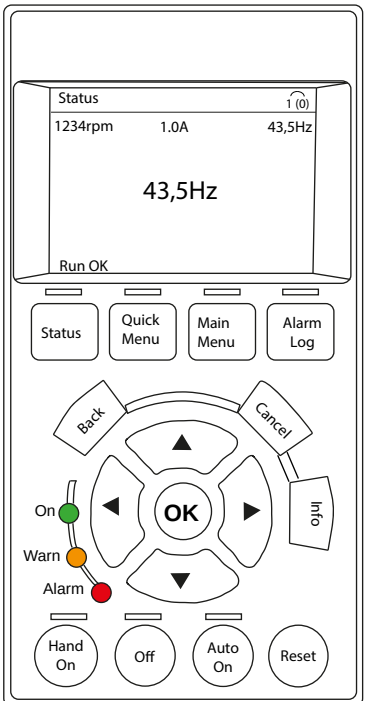

Editing Buttons

- OK — Select parameter marked by cursor and enables the change of parameters
- Hand On — Enables control of drive via the GLCP. Start the motor and allows speed setting using arrow keys.
- Off — Stops the motor.
- Auto On — Enables drive control via controls input(s).
- Reset — Resets the drive after an alarm (trip)

Indicator Lights

- On (green)
  - The pump is running or has stopped by a stop function
  - If flashing, the pump has been stopped by the user (CUE menu), external start/stop or bus.
- Warn (orange)
  The pump has been stopped with the on/off button.
- Alarm (red)
  Indicates an alarm or a warning.

Navigation Buttons

- ◀ ▶ — Navigates from one menu to another. When the menu is changed, the display shown will always be the top display of the new menu.
- ▲ ▼ — Navigates up and down in the individual menu.
- Back — Reverts to the previous step or layer in the navigation structure.
- Cancel — Last change or command will be cancelled as long as the display has not been changed.
- Info — Displays info about a command, parameter of function.
- Status — Indicates the status of the drive and / or motor.
- Quick Menu — Allows quick setup of the drive, most common parameters and functions can be accessed here.
- Main Menu — Used to access all parameters for programming.
- Alarm Log — Displays a list of the 10 latest alarms, Extra info can be obtained by selecting the alarms.

Running the pump alone for low ambient flow protection or during commissioning.

To run the pumps alone without operating the compressors, the following procedure is carried out:

1. Set the remote unit ON / OFF to the OFF position (Open Circuit).
2. Remote pump ON / OFF to ON position (Closed Circuit).
3. Turn the unit ON by display through the microprocessor.

The pumps on the chiller will start. Cooling will not be enabled until the remote unit ON / OFF is to the ON position.
This method is used to ensure that there is water flow through the chiller during periods of unit shut down.
To reinstate cooling the unit remote ON / OFF is to be Closed.

Operational Maintenance checks

Owners Responsibility

To ensure that the chiller can be maintained correctly ensure the following requirements are met.

Maintain a safe working environment around the chiller, free from obstructions and debris.
The unit shall follow the maintenance schedule below as a minimum.

CAUTION ⚠	The equipment contains live electrical and moving parts, ISOLATE prior to maintenance or repair work. Ensure lock off procedures are carried out accordingly. If inverter driven pumps are used ensured at least 5 minutes is allowed for them to discharge any electrical charge.

Maintenance

General Inspections

Task		Frequency		
		3 Mths	12 Mths	60 Mths
General Inspections	Check for visible mechanical damage to unit.	•		
	Visually inspect the unit for general wear and tear, treat metalwork.	•		
	Rust should be inhibited, primed and touched up with matching paint.			
	Check for excess vibration from other rotating equipment.	•		
	Clean Microchannel condenser coil	•		

Service Tools/Test Equipment

- Touch-up Paint
- Pressurised Air
- Soft Brush

Safety Equipment

- Safety Glasses / Goggles

Procedures

Coil Cleaning

The coil should be cleaned using pressurised air, which must not exceed 10 bar at any time, from a minimum distance of 300mm. The air should be directed in the same direction as the fins to avoid damage, fins should be combed back into position if they become misaligned.
The coil should never be exposed to substances which are abrasive to aluminium, including the use of copper bits and substances with a pH outside of 7 to 8..2, even during maintenance and cleaning. Such substances can seriously damage the coil. This applies both to the internal circuits and to the external surface of the coil.

Access to the coil for cleaning and maintenance purposes is through the removable side panel, as shown below.

Maintenance

Electrical Inspection

	Task	Frequency		
		3 Mths	12 Mths	60 Mths
Electrical Inspection	Check mains power supply voltages		●	
	Check electrical terminals are tight.		●	
	Check for signs of hot spots/ discolouration on power cables.		●	
	Check amperages are as per design.	●		

Service Tools/Test Equipment
- Voltmeter
- Screwdrivers / Allen Keys
- Ammeter

Safety Equipment
- Safety Glasses / Goggles

Procedures

Electrical Connections
Ensure all electrical connections are tight and correctly terminated.

Electrical Earthing
Check that the unit is correctly earthed.

Voltage
Measure the voltage at the following points and record on the maintenance sheet:
- Voltage at busbar.
- Dedicated power supply.
- Voltage at permanent supply.
- Control voltage at transformer (min 22.5V, max 25V).

The voltage measurements should be carried out with the unit MCB's turned off.

EC Fan Interrogation
The EC fans can be interrogated by connecting a hardware interface kit from the fan to a PC. The kit comprises of a USB to RS232 9-pin "D-type" adapter. This should be installed on the PC with the software supplied with the kit.
The "COM" port of the USB to RS232 adapter should be assigned to a free COM port between COM 1 and 4 via the system device manager.

Connect the RS232 to RS485 interface converter to the USB port of your PC via the USB to RS232 serial interface lead and connect the RS485 output to the fan.
Tx += RS A Tx - = RS B
(Except high airflow fans. Interogation is via a separate module avaliable from Airedale)

Maintenance

Refrigeration

	Task	Frequency		
		3 Mths	12 Mths	60 Mths
Refrigeration	Compare the following and compare results with commissioning records:			
	Suction, liquid and discharge pressures.	•		
	Refrigeration system temperatures, suction, liquid and discharge. Record superheat and sub cooling temperatures.	•		
	Check each circuit sight glass for dryness and bubbles for indication of leaks.	•		
	Head pressure control is maintained.	•		
	Record details on F-Gas record.	•		
	Pressure relief valves. (replace in accordance to building insurance)			•

Service Tools/Test Equipment

- Refrigerant Manifold Gauges
- Spanners
- Voltmeter

Safety Equipment

- Safety Glasses / Goggles
- Gloves
- Overalls

Procedures

HP / LP Safety Pressure Switch Settings

Check operation of HP/LP cut-out.

Settings

LP cut-out – (Auto reset for 3 times when the Low Pressure is detected over a period of 1 hour)
Has a 2 minute delay on start-up (similar to a Low ambient kit)
Low pressure cut-out 0.29 +/- 0.2 Barg
HP switch (Manual reset): High pressure switch 17.5 Barg +/- 0.7 Barg
HP limiting function 15.0 Barg / 1.5 Barg differential

Maintenance

Waterside

	Task	Frequency		
		3 Mths	12 Mths	60 Mths
Waterside	Check pressure drop of water strainer against graphs. If excessive clean the strainer.		•	
	Visually inspect pipe and pipework insulation. Ensure pipework clamps are secure.		•	
	Inspect for water leakage.	•		
	Check pressure drop of evaporator against graphs. Clean evaporator if excessive.	•		
	Check condition of Water / Glycol solution to ensure that the system is protected against corrosion, scale and microbiological fouling, ensuring maximum heat transfer efficiency.	•		

Service Tools/Test Equipment

- Spanners
- Manometer
- Thermometer
- Refractometer

Safety Equipment

- Safety Glasses / Goggles
- Gloves
- Overalls

Procedures

Water Strainer

A water strainer must be fitted to the inlet side of the chiller evaporator.
Failure to do so may result in severe damage and will void the AIREDALE warranty.

Water Flow Rate

Check that the design water flow rate is available to the unit. If not available do not turn unit on.

Waterside Pressure Drop

Measure the waterside pressure drop of the unit ensuring that the pump (if fitted) is operating.

Glycol Strength

Check and record the glycol type and strength. Low levels of glycol can cause freeze up problems when operating at low temperatures or during the unit off state during cold ambient conditions.
Glycol concentration is measured by use of a Refractometer.

Differential Pressure Sensor

Ensure that the differential pressure sensor operates satisfactorily; the best way to do this is to reduce the flow to the chiller.
From pressure curves determine the design flow rate / pressure drop
Make sure that any effects of glycol in the system are taken into account (flow rate and pressure drop).
Input into the controller the reduced pressure drop (kPa) value (normally 80% of design flow rate)
Once this value is programmed into the controller the water flow rate can be reduced to verify that the low flow alarm is activated.
Ensure that the tubes connected to the sensor are insulated.

Flow Switch

A “paddle” type flow switch is fitted, wired to the chiller control panel and tested. This should be fitted on the outlet of the evaporator and before isolation valves.
A flow switch must also be fitted on the condenser outlet (water cooled models).

Pump Interlock

Check that the pump interlock is fitted and functioning correctly.

Maintenance

Controls

	Task	Frequency		
		3 Mths	12 Mths	60 Mths
Controls	Change controller battery.		●	

The controller will keep the strategy for a short period of time with no battery.

Service Tools/Test Equipment

- Small Terminal Screwdriver

Safety Equipment

- Electrostatic Wristband

Procedures

The following controller settings are to be recorded on the maintenance sheet:

- Head pressure differential (bar)
- Minimum suction pressure (bar)
- Supply water set point (Summer / Day) (°C)
- Supply water set point (Winter / Night) (°C)
- Minimum supply water temperature (°C)

Maintenance

System

	Task	Frequency		
		3 Mths	12 Mths	60 Mths
System	Check the following against the commissioning records:			
	Record operating conditions.	●		
	Water on / off temperatures.	●		
	Water pressure drop.	●		

Unit Operation Checks

Record the following operating conditions of the unit at stable conditions:

- Suction pressure (bar)
- Liquid pressure (Bar)
- Discharge pressure (Bar)
- Suction temperature (°C)
- Liquid temperature (°C)
- Discharge temperature (°C)
- Superheat (K)
- Sub cooling (K)
- Water return temperature (°C)
- Water supply temperature (°C)

Low supply water trip

To check operation of the low temperature trip the following procedure can be carried out.
With the unit running increase the low temperature limit to the actual supply water temperature.
This will trip the unit in a safe manner without risk of freezing the evaporator.
Return the low temperature limit to correct value after test (this will allow the unit to operate correctly).

Liquid line sight glass

Record the status of the liquid line sight glass:

- Clear/Flashing
- Wet/Dry

The sight glass is used to indicate:

- The condition of the refrigerant in the system
- Lack of refrigerant
- Moisture content of the refrigerant

The colour of the sight glass depends on the moisture content of the refrigerant. The recommended moisture levels of a system should be below 75ppm.

An indication of green/dry are to be considered as perfect conditions meaning full protection by the filter drier against effects from moisture.

If the green colour starts to fade, the colour change from green to yellow has begun and the indicator should therefore be watched carefully. If the colour changes to yellow it is a clear signal that the capacity of the filter drier is exceeded and should be replaced as soon as possible.

F-Gas Leak Detection Checks

Perform an F-Gas refrigerant leak detection on the unit and ensure no refrigerant leaks are found.

Checks must also be carried out on the operation of the refrigerant leak detector in accordance to manufacturers instructions.

Troubleshooting

	Fault	Possible Cause	Remedy / Action
General	Unit will not start	No power.	Check power supply to the controller.
		Wired incorrectly.	Check wire connections in accordance with wiring diagram.
		Loose wires.	Check all wires, connections, terminals etc.
		Remote on/off.	Check that the remote on/ off is at the on position.
Refrigeration	Compressor not operating	No power to compressor.	Check isolator, fuses, MCBs, contactor and control circuit wiring.
		Low pressure cut-out operated (large or complete loss of refrigerant charge).	Recover refrigerant, repair, pressure test, evacuate and recharge system.
		Compressor showing fault on controller.	Determine fault, refer to alarm codes for further information.
	Head pressure too high / HP cut-out operated	Condenser coil clogged or dirty.	Clean condenser.
		Overcharge of refrigerant. Normally troublesome in warm weather.	Remove excess refrigerant from system using correct refrigerant handling techniques.
		Air or other non-condensable gas in system.	Evacuate system and re-charge with new refrigerant.
		Head pressure controller faulty.	Check EC fan control module - if faulty - replace.
		Fan not operating or operating inefficiently.	Check motor - if faulty - replace.
	Head pressure too low	Fan operating too fast in low ambient conditions.	Check EC fan control module - if faulty - replace.
	Suction pressure too low	Flash gas (bubbles in sight glass) at liquid line.	Investigate for refrigerant leaks, repair, pressure test, evacuate and re-charge system.
		Clogged filter drier (pressure / temperature drop across it).	Replace drier cores.
Condenser	Condenser fan not operating - power on	Power supply failure.	Check power supply at circuit breaker.
		Wiring to motors.	Check voltage at motor terminals.
		Motor / fan assembly jammed.	Isolate unit and check free rotation of motor/fan assembly. If faulty - replace.
		Motor internal overheat protector tripped.	Carry out continuity check at terminals “TK” in motor terminal box.
			If tripped and motor hot - check to see if the motor bearings have seized / fan difficult to turn.
			If tripped and motor cold - replace motor.
		Faulty motor windings / capacitor.	Motor humming would indicate fault in motor or capacitor. Check windings for continuity and if OK replace capacitor.
		Minimum speed set too low.	Adjust head pressure controller to suit.
	Condenser fan runs too fast	High ambient condition or excessive re-circulation of air around condenser coil.	Check installation against design.
		Minimum set speed setting incorrect.	Adjust as necessary.
		Incorrect pressure sensor setting.	Adjust via microprocessor.
		Faulty EC fan.	Replace fan.
		Faulty pressure sensor.	Replace sensor.
	Condenser fans runs only slowly	Incorrect pressure setting.	Adjust via microprocessor.
		Faulty EC fan.	Replace fan.
		Faulty pressure sensor.	Replace sensor.
		Motor / capacitor faulty.	Replace.
		Motor wired incorrectly.	Check against wiring diagram - correct as required.

Troubleshooting

	Fault	Possible Cause	Remedy / Action
Waterside	Pump not operating	No power to pump. Inverter tripped and does not auto reset (the microprocessor will try and auto reset 3 times)	Check isolator, fuses, MCBs, contactor and control circuit wiring. Reset inverter drive via microprocessor.
	No water flow	Strainer blocked.	Clean strainer
	Pump noisy	Air in water system. Pump cavitations.	Purge air from water system. Ensure there is 0.5m NPSH suction head to avoid cavitations.
	Unit not operating due to water pressure sensor low limit alarm.	Low flow alarm operating.	Check that the low flow pressure variable is set correctly. If too high the unit may have nuisance trips.
	Low temp limit alarm	Partial blockage in evaporator causing low flow.(1) No heatload on system	Clean evaporator Ensure heatload is avaliable for unit to operate
	Water/ Glycol freezing up (crystallizes)	Insufficient glycol / water concentration for operating temperatures.	Check glycol concentration and add accordingly.

(1) The water flow is reduced however the differential pressure switch may still remains healthy as the pressure would increase.

Alarms

Alarm Menu Display

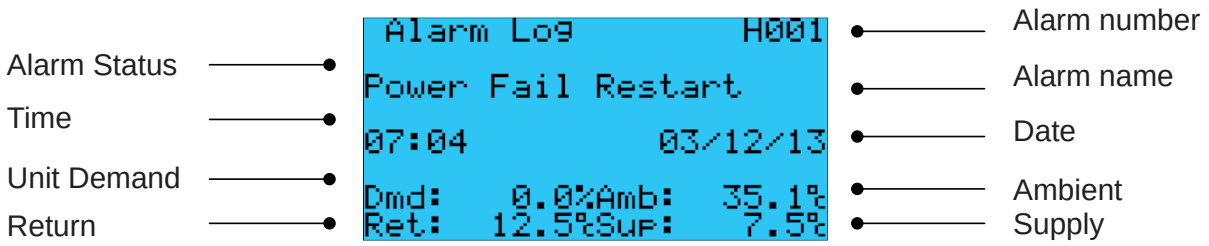

Alarm Log

The alarm page offers a log of the last 150 alarm messages in a scrolling log, pressing the alarm button will enter the alarm page.

Consequently the most recent alarm has the lowest log number (001) and will be displayed upon entering the alarm page. As another alarm occurs, the alarm number increases until 150 alarms have occurred. From this point on, alarm 001 moves to 002 and any new alarm will reside in position 001.

As new alarms are generated and cleared, the highest number logs (150) in the scroll will be lost.

Viewing the Alarm Log

By using the arrow keys, the last 150 alarms generated can be reviewed in chronological order. The display provides the alarm type information and the time and date of each alarm occurrence.

Alarm Detection

When the controller detects an alarm an output is generated to the relevant alarm relay which in turn illuminates the button. To see which alarm has accrued press the button and the most recent alarm will be displayed.

If the alarm light is on, the alarm page can be interrogated to identify which alarm is active.

Resetting the Alarm

The auto reset alarms will automatically reset once the conditions are within the set parameters. To clear a manual alarm press the button twice and the red LED will disappear.

Alarms

Code	Description	Auto Reset	Unit Disabled	Component Disabled	Cause	Action	Default Alarm Type
AL001	Comp1 MB Comms.Offline	●		●	Communication to the compressor has failed	Check: Wiring / modbus card / compressor communication board / compressor fuses and power	1 = Non critical
AL002	Comp2 MB Comms.Offline						
AL003	Comp3 MB Comms.Offline						
AL004	Comp4 MB Comms.Offline						
AL005	Power Meter MB Offline	●	●	●	Communication to the power meter has been lost	Check: wiring / modbus card / power meter	
AL006	Cond. Pressure1 Fault	●	●	●	The sensor has gone out of its operating range	Check: wiring / sensor	
AL007	Evap.Diff.Press. Fault		●	●			
AL008	Evap.Flow Meter Fault		●	●			
AL009	Return Temp. Fault		●	●			
AL010	Supply Temp. Fault		●	●			
AL011	Temp. Setpoint Fault			●			
AL012	Cond.Air On Temp Fault			●			
AL013	Clock Alarm	●		●	The internal clock has malfunctioned	Replace battery	
AL014	Phase Failure	●	●	●	The 3 phase power supply crossed / loss (wait 30s with a power meter on power up)	Check 3 phase connection	2 = Critical
AL015	Emergency Stop	●	●	●	The emergency stop button has been pressed	Release the emergency stop button	
AL016	Evaporator Flow Alarm	●	●	●	No evaporator flow has been detected	Check: pumps are running / flow	
AL017	Low Pressure 1 Switch	●	●	●	Circuit 1 suction pressure below 0.5 bar	Check: refrigerant charge / EEV operation	
AL018	Comp1 Status Alarm	●		●	Contactor has been switched on but has failed to operate	Check: high pressure switch / contactor. / wiring.	1 = Non critical
AL019	Comp2 Status Alarm			●			
AL020	Comp3 Status Alarm			●			
AL021	Comp4 Status Alarm			●			
AL022	Mains Failure	●	●	●	The permanent L4 supply has failed to the control panel	Check: L4 supply	2 = Critical
AL023	Pump1 Status Alarm		●	●	Contactor has been switched on but has failed to operate	Check: contactor / wiring	1 = Non critical
AL024	Pump2 Status Alarm		●	●			
AL025	Low Supply Temperature	●	●	●	The supply water temperature is too low	Check: flow rate / Unit TD	
AL026	High Cond. Pressure 1	●	●	●	Circuit 1 condensing pressure is higher than 13.6Bar	Check: condenser / condenser fans	

Alarms

Code	Description	Auto Reset	Unit Disabled	Component Disabled	Cause	Action	Default Alarm Type
AL027	pCO5 Module Offline	●		●	Communication to the pCOe expansion module has been lost	Check: communications link / wiring	1 = Non critical
AL028	Leak Detector 1 Fault	●		●	The output from the leak detector is out of range	Check: leak detector / wiring	
AL029	Leak Detector 2 Fault			●			
AL030	Leak Detector 3 Fault			●			
AL031	Leak Detector 4 Fault			●			
AL032	Possible Leak Comp.1	●			The reading from the leak detector is above the threshold	Check: pipe work around the leak detector	
AL033	Possible Leak Comp.2						
AL034	Possible Leak Comp.3						
AL035	Possible Leak Comp.4						
AL036	Inverter Temp. Comp.1	●		●	The temperature of the compressor inverter is high	Check: liquid line to the compressor / solenoid valves	
AL037	Discharge Temp. Comp.1	●		●	The temperature of the discharge gas is high	Check: refrigerant charge / discharge temperature sensor	
AL038	Suction Press. Comp.1	●		●	The suction pressure is too high / low at the compressor	Check: charge / system load / sensor / suction strainer	
AL039	Discharge Press.Comp.1	●		●	The discharge pressure has exceeded it limit	Check: The sensor / condenser/ shut off valves	
AL040	3Ph. Current Comp.1	●		●	Indicates there maybe an excessive load on the system		
AL041	Cavity Temp. Comp.1	●		●	The cavity temperature inside the compressor is high	Check: the liquid cooling line / solenoid valve	
AL042	Air/Water Temp. Comp.1	●		●	There maybe insufficient water flow due to air gaps	Check: Sensor limits	
AL043	Compress. Ratio Comp.1	●		●	The compression ratio of the compressor is out of range	Check: condenser / evaporator loads and settings	
AL044	Bearing Reset Comp.1	●		●	Low suction pressure / liquid	Check: refrigerant circuit	
AL045	SCR Temp. Comp.1	●		●	Indicates insufficient cooling to the SCR plate	Check: alarms limits in the compressor	
AL046	System Lockout Comp.1			●	When a SCR / inverter / cavity temperature fault occurs more than 3 time in 30minutes	Check: motor cooling line and solenoids valves / cycle compressor power	

Alarms

Code	Description	Auto Reset	Unit Disabled	Component Disabled	Cause	Action	Default Alarm Type
AL047	Inverter Temp. Comp.2	●		●	The temperature of the compressor inverter is high	Check: liquid line to the compressor / solenoid valves	1 = Non critical
AL048	Discharge Temp. Comp.2	●		●	The temperature of the discharge gas is high	Check: refrigerant charge / discharge temperature sensor	
AL049	Suction Press. Comp.2	●		●	The suction pressure is too high / low at the compressor	Check: charge / system load / sensor / suction strainer	
AL050	Discharge Press.Comp.2	●		●	The discharge pressure has exceeded it limit	Check: the sensor / condenser/ shut off valves	
AL051	3Ph. Current Comp.2	●		●	Indicates there may be an excessive load on the system		
AL052	Cavity Temp. Comp.2	●		●	The cavity temperature inside the compressor is high	Check: the liquid cooling line / solenoid valve	
AL053	Air/Water Temp. Comp.2	●		●	There maybe insufficient water flow due to air gaps	Check: sensor limits	
AL054	Compress. Ratio Comp.2	●		●	The compression ratio of the compressor is out of range	Check: condenser / evaporator loads and settings	
AL055	Bearing Reset Comp.2	●		●	Low suction / liquid	Check: refrigerant Circuit	
AL056	SCR Temp. Comp.2	●		●	Indicates insufficient cooling to the SCR plate	Check: alarms limits in the compressor	
AL057	System Lockout Comp.2			●	When a SCR / inverter / cavity temperature fault occurs more than 3 time in 30 minutes	Check: motor cooling line and solenoids valves / cycle power	
AL058	Inverter Temp. Comp.3	●		●	The temperature of the compressor inverter is high	Check: liquid line to the compressor / solenoid valves	
AL059	Discharge Temp. Comp.3	●		●	The temperature of the discharge gas is high	Check: refrigerant charge / discharge temperature sensor	
AL060	Suction Press. Comp.3	●		●	The suction pressure is too high / low at the compressor	Check: charge / system load / sensor / suction strainer	
AL061	Discharge Press.Comp.3	●		●	The discharge pressure has exceeded it limit	Check: the sensor / condenser/ shut off valves	
AL062	3Ph. Current Comp.3	●		●	Indicates there may be an excessive load on the system		
AL063	Cavity Temp. Comp.3	●		●	The cavity temperature inside the compressor is high	Check: the liquid cooling line / solenoid valve	

Alarms

Code	Description	Auto Reset	Unit Disabled	Component Disabled	Cause	Action	Default Alarm Type
AL064	Air/Water Temp. Comp.3	●		●	There may be insufficient water flow due to air gaps	Check: sensor limits	1 = Non critical
AL065	Compress. Ratio Comp.3	●		●	The compression ratio of the compressor is out of range	Check: condenser / evaporator loads and settings	
AL066	Bearing Reset Comp.3	●		●	Low suction / liquid	Check: refrigerant circuit	
AL067	SCR Temp. Comp.3	●		●	Indicates insufficient cooling to the SCR plate	Check: alarms limits in the compressor	
AL068	System Lockout Comp.3			●	When a SCR / inverter / cavity temperature fault occurs more than 3 time in 30 minutes	Check: motor cooling line and solenoids valves / cycle power	
AL069	Inverter Temp. Comp.4	●		●	The temperature of the compressor inverter is high	Check: liquid line to the compressor / solenoid valves	
AL070	Discharge Temp. Comp.4	●		●	The temperature of the discharge gas is high	Check: refrigerant charge / discharge temperature sensor	
AL071	Suction Press. Comp.4	●		●	The suction pressure is too high / low at the compressor	Check: charge / system load / sensor / suction strainer	
AL072	Discharge Press.Comp.4	●		●	The discharge pressure has exceeded it limit	Check: the sensor / condenser/ shut off valves	
AL073	3Ph. Current Comp.4	●		●	Indicates there may be an excessive load on the system		
AL074	Cavity Temp. Comp.4	●		●	The cavity temperature inside the compressor is high	Check: the liquid cooling line / solenoid valve	
AL075	Air/Water Temp. Comp.4	●		●	There maybe insufficient water flow due to air gaps	Check: sensor limits	
AL076	Compress. Ratio Comp.4	●		●	The compression ratio of the compressor is out of range	Check: condenser / evaporator loads and settings	
AL077	Bearing Reset Comp.4	●		●	Low suction / liquid	Check: refrigerant Circuit	
AL078	SCR Temp. Comp.4	●		●	Indicates insufficient cooling to the SCR plate	Check: alarms limits in the compressor	
AL079	System Lockout Comp.4			●	When a SCR/inverter/ cavity temperature fault occurs more than 3 time in 30minutes	Check: motor cooling line and solenoids valves / cycle power	

Alarms

Code	Description	Auto Reset	Unit Disabled	Component Disabled	Cause	Action	Default Alarm Type
AL080	Hours Limit Comp.1	●		●	The hours run for the compressor has exceeded the threshold	If component is functioning correctly perform maintenance and reset hours	1 = Non critical
AL081	Hours Limit Comp.2			●			
AL082	Hours Limit Comp.3			●			
AL083	Hours Limit Comp.4			●			
AL084	Hours Limit Pump 1	●		●	The hours run for the pumps has exceeded the threshold	If component is functioning correctly perform maintenance and reset hours	
AL085	Hours Limit Pump 2			●			
AL086	Liquid Level 1 Fault	●		●	Circuit 1 liquid level sensor has gone out of range	Check: the sensor / Wiring	
AL087	CW Valve FeedB(A)ck	●		●	Valve failed to open	Check: valve operation / Wiring	
AL088	Cond. Pressure2 Fault	●	●	●	Circuit 2 condensing pressure sensor has gone out of its operating range	Check: wiring / Sensor	
AL089	Low Pressure 2 Switch			●	Circuit 2 suction pressure is below 0.5 bar	Check: refrigerant charge / EEV operation	2 = Critical
AL090	High Cond. Pressure 2			●	Circuit 2 condensing pressure is higher than 13.6 Bar	Check: Condenser / Condenser Fans	1 = Non critical
AL091	Liquid Level 2 Fault	●	●	●	Circuit 2 liquid level sensor has gone out of range	Check: wiring / Sensor	
AL092	Evap.Inlet Temp. Fault	●	●	●	The sensor has gone out of its operating range	Check: wiring / sensor	
AL093	Serious Alarm Comp.1			●	The compressor has been in alarm more than 5 times in 2 hours	Check the operation of the compressor / circuit	
AL094	Serious Alarm Comp.2			●			
AL095	Serious Alarm Comp.3			●			
AL096	Serious Alarm Comp.4			●			
AL097	Evap. Low Flowrate		●	●	The evaporator flow rate is equal to or less than 20% of design	Check the evaporator strainer or for any other blockages	
AL098	Liq. Valve EVD1 Alarm			●	The electronic expansion valve driver used to position the flooded evaporator liquid level control valve is in alarm	Check the wiring between the EVD and the liquid level control valve / check the operation of the control valve stepper motor	2 = Critical
AL099	Liq. Valve EVD2 Alarm			●			

Alarms

Code	Description	Auto Reset	Unit Disabled	Component Disabled	Cause	Action	Default Alarm Type
AL100	High Liquid Level Cct1	●			High level of refrigerant in flooded evaporator	Check the operation of the liquid level control valve	1 = Non critical
AL101	Low Liquid Level Cct1	●			Low level of refrigerant in flooded evaporator	Check the operation of the liquid level control valve / refrigerant leak	
AL102	High Liquid Level Cct2	●			High level of refrigerant in flooded evaporator	Check the operation of the liquid level control valve	
AL103	Low Liquid Level Cct2	●			Low level of refrigerant in flooded evaporator	Check the operation of the liquid level control valve / refrigerant leak	
AL104	Cond.Return Temp.Fault	●	●	●	The sensor has gone out of its operating range	Check: wiring / sensor	
AL105	Cond.Supply Temp.Fault	●	●	●	The sensor has gone out of its operating range	Check: wiring / sensor	
AL106	Cond.Diff.Press. Fault	●	●	●	The sensor has gone out of its operating range	Check: wiring / sensor	
AL107	Condenser Flow Alarm	●			No condenser flow has been detected	Check: condenser pump is running / flow	2 = Critical
AL108	Unit Pump Down Cct1			●	The circuit has been partially pump down and disabled	Check for refrigerant loss and reset	
AL109	Unit Pump Down Cct2			●			
AL110	Possible Unit Ref.Leak	●			A possible unit refrigerant leak has been detected	Check for refrigerant loss	1 = Non critical
AL111	Mains Isolator Status Alarm	●	●	●	Mains isolator is off.	If safe to do so switch on.	2 = Critical
AL112	Circuit 1 Condenser Fan Trip	●			One or more condenser fans have tripped on circuit 1.	Check circuit 1 condenser fan operation / wiring.	1 = Non critical
AL113	Circuit 2 Condenser Fan Trip	●			One or more condenser fans have tripped on circuit 2.	Check circuit 2 condenser fan operation / wiring.	
AL114	Condenser Fan Isolator Status	●		●	Condenser fan isolator is off.	If safe to do so switch on.	
AL115	Pump Isolator Status	●		●	Pump isolator is off.	If safe to do so switch on.	
AL116	Refrigerant Leak Detector 1 MB Communications Offline	●			Communication to the leak detector has failed	Check: wiring / modbus connection / leak detector.	
AL117	Refrigerant Leak Detector 2 MB Communications Offline	●					
AL118	Refrigerant Leak Detector 3 MB Communications Offline	●					
AL119	Refrigerant Leak Detector 4 MB Communications Offline	●					

Pump Alarms

Code and display text	Warning	Status			Operating Mode	Re-setting
		Warning	Alarm	Locked Alarm		
1	Too high leakage current			●	Stop	Man.
2	Mains phase failure		●		Stop	Auto
3	External fault		●		Stop	Man.
16	Other fault		●		Stop	Auto
				●	Stop	Man.
30	Replace motor bearing	●			-	Man. (3)
32	Overvoltage	●			-	Auto
			●		Stop	Auto
40	Undervoltage	●			-	Auto
			●		Stop	Auto
48	Overload		●		Stop	Auto
				●	Stop	Man.
49	Overload		●		Stop	Auto
55	Overload	●			-	Auto
					Stop	Auto
57	Dry running	●			Stop	Auto
64	Too high CUE temperature	●			Stop	Auto
70	Too high motor temperature	●			Stop	Auto
77	Communication fault, duty / standby	●			-	Auto
89	Sensor 1 outside range		●		(1)	Auto
91	Temperature sensor 1 outside range	●			-	Auto
93	Sensor 2 outside range	●			-	Auto
96	Setpoint signal outside range	●			(1)	Auto
148	Too high bearing temperature	●				Auto
			●		Stop	Auto
149	Too high bearing temperature	●				Auto
			●			Auto
155	Inrush fault		●			Auto
175	Temperature sensor 2 outside range	●			-	Auto
240	Re-lubricate motor bearings	●			-	Man. (3)
241	Motor phase failure	●			-	Auto
			●		Stop	Auto
242	AMA did not succeed (2)	●			-	Man.

(1) in case of an alarm, the CUE will change the operating mode depending on the pump type

(2) AMA, Automatic Motor Adaption

(3) Warning is reset in display 3.20

Appendix - Ecodesign

The following tables of Ecodesign data is based on the following common information:

SEPR (Seasonal Energy Performance Ratio)

- Type of Condensing - Air Cooled Standard EC Fans.
- Refrigerant Fluid - R134a.
- Operating Temperature - +7°C (Outlet water).
- Operating Control - Variable.
- Outdoor Side Heat Exchanger - Air.
- Indoor Heat Exchanger - Water.
- Type Driven - Vapour Compression.
- Driver of Compressor - Electric Motor.
- Degradation coefficient - 0.9

Part load conditions for SEPR calculation for air cooled high temperature process chillers

Rating Point	Part load ratio (%)	Outdoor side heat exchanger	Indoor side heat exchanger
		Inlet air temperature (°C)	Evaportator inlet/ outlet water temperatures (°C)
			Fixed outlet
A	100	35	12/7
B	93	25	(*)/7
C	87	15	(*)/7
D	80	5	(*)/7

EU 2016/2281 Table 22.

(*) With the water flow rate determined during “A” test for units with a fixed water flow rate or with a variable flow rate.

SSCEE (Seasonal Space Cooling Energy Efficiency)

- Capacity Control - Variable.
- Standard Rating Condition - Low Temperature Operation.

Air to water comfort chillers

Rating Point	T_1 (°C)	Part load ratio (%)	Outdoor air dry bulb temperature (°C)	Fan coil application inlet/ outlet water temperature (°C)		Cooling floor application inlet/ outlet water temperatures (°C)
				Fixed outlet	Variable outlet (*)(*)	
A	35	100 %	35	12/7	12/7	23/18
B	30	74 %	30	(*)/7	(*)/8.5	(*)/18
C	25	47 %	25	(*)/7	(*)/10	(*)/18
D	20	21 %	20	(*)/7	(*)/11.5	(*)/18

EU 2016/2281 Table 21.

Technical Data - TCC R

TCC11R04S-01, TCC11R06S-01, TCC11R08S-01

Ecodesign

	Notes:		TCC11R04S-01	TCC11R06S-01	TCC11R08S-01
SEPR	1,3,5		7.4	7.9	8.3
SEPR Tier			Tier 2 (2021)	Tier 2 (2021)	Tier 2 (2021)
Annual Electricity Consumption		kWh/a	239238.5	247535.3	246750.0
Rated Refrigerant Capacity P_A	1,3,5	kW	239.2	264.0	273.9
Rated Power Input D_A		kW	71.3	73.3	72.5
Rated $EER_{DC,A}$			3.35	3.60	3.78
Declared Refrigerant Capacity P_B	1,3,5	kW	223.2	246.3	255.6
Declared Power Input D_B		kW	47.8	49.0	48.5
Declared $EER_{DC,B}$			4.67	5.03	5.27
Declared Refrigerant Capacity P_C	1,3,5	kW	207.2	228.7	237.3
Declared Power Input D_C		kW	31.1	32.1	31.8
Declared $EER_{DC,C}$			6.66	7.12	7.47
Declared Refrigerant Capacity P_D	1,3,5	kW	191.2	211.0	218.9
Declared Power Input D_D		kW	18.5	19.3	19.4
Declared $EER_{DC,D}$			10.34	10.96	11.28
SSCEE	2,3,5	%	202.6	218.6	229.1
SSCEE Tier			Tier 2 (2021)	Tier 2 (2021)	Tier 2 (2021)
Rated Cooling Capacity $P_{rated,c}$	2,4,5	kW	240.0	265.0	275.0
Declared Cooling Capacity 35°C Pdc	2,3,5	kW	239.2	264.0	273.9
Declared EER_d 35°C			3.35	3.60	3.78
Declared Cooling Capacity 30°C Pdc	2,3,5	kW	176.0	194.3	201.6
Declared EER_d 30°C			4.31	4.68	4.93
Declared Cooling Capacity 25°C Pdc	2,3,5	kW	112.9	124.5	129.2
Declared EER_d 25°C			5.81	6.16	6.44
Declared Cooling Capacity 20°C Pdc	2,3,5	kW	85.8	80.0	77.6
Declared EER_d 20°C			6.52	7.23	7.62
Sound Power Level		dB(A)	88	87	87
Air Volume		m³/h	82650	123975	165301
Off mode P_{OFF}		kW	0.249	0.249	0.249
Thermostat-off mode P_{TO}		kW	0.832	0.989	1.076
Standby Mode P_{SB}		kW	0.330	0.340	0.350
Crankcase heater mode P_{CK}		kW	0.000	0.000	0.000

(1) Nominal conditions as stated in EU 2016/2281 Table 22.
(2) Nominal conditions as stated in EU 2016/2281 Table 21
(3) Performance data (Nett) is supplied in accordance with EN14511-1:2013.
(4) Performance data (Gross) is supplied excluding absorbed pump power as per EN14511-1:2013.
(5) All performance data based upon standard waterside configuration.

Technical Data

TCC11R06L-02, TCC11R08L-03, TCC11R10L-03

Ecodesign

	Notes:		TCC11R06L-02	TCC11R08L-03	TCC11R10L-03
SEPR	1,3,5		7.0	6.9	7.0
SEPR Tier			Tier 2 (2021)	Tier 2 (2021)	Tier 2 (2021)
Annual Electricity Consumption		kWh/a	413233.0	455479.6	479692.3
Rated Refrigerant Capacity P_A	1,3,5	kW	389.4	423.1	447.8
Rated Power Input D_A		kW	129.1	137.0	141.8
Rated $EER_{DC,A}$			3.02	3.09	3.16
Declared Refrigerant Capacity P_B	1,3,5	kW	363.4	394.8	417.8
Declared Power Input D_B		kW	82.8	87.1	90.5
Declared $EER_{DC,B}$			4.39	4.53	4.62
Declared Refrigerant Capacity P_C	1,3,5	kW	337.4	366.4	387.8
Declared Power Input D_C		kW	53.2	56.0	58.3
Declared $EER_{DC,C}$			6.34	6.54	6.65
Declared Refrigerant Capacity P_D	1,3,5	kW	311.4	338.1	357.8
Declared Power Input D_D		kW	32.3	38.0	40.8
Declared $EER_{DC,D}$			9.64	8.90	8.78
SSCEE	2,3,5	%	186.6	201.1	207.1
SSCEE Tier			Tier 2 (2021)	Tier 2 (2021)	Tier 2 (2021)
Rated Cooling Capacity $P_{rated,c}$	2,4,5	kW	390.0	425.0	450.0
Declared Cooling Capacity 35°C Pdc	2,3,5	kW	389.4	423.1	447.8
Declared EER_d 35°C			3.02	3.09	3.16
Declared Cooling Capacity 30°C Pdc	2,3,5	kW	286.8	311.3	329.4
Declared EER_d 30°C			4.16	4.34	4.52
Declared Cooling Capacity 25°C Pdc	2,3,5	kW	184.2	199.4	211.0
Declared EER_d 25°C			4.36	5.56	5.81
Declared Cooling Capacity 20°C Pdc	2,3,5	kW	103.2	98.3	95.6
Declared EER_d 20°C			7.22	6.88	6.94
Sound Power Level		dB(A)	90	90	89
Air Volume		m³/h	123975	165301	206626
Off mode P_{OFF}		kW	0.249	0.249	0.249
Thermostat-off mode P_{TO}		kW	0.570	1.892	2.165
Standby Mode P_{SB}		kW	0.340	0.350	0.360
Crankcase heater mode P_{CK}		kW	0.000	0.000	0.000

(1) Nominal conditions as stated in EU 2016/2281 Table 22.
(2) Nominal conditions as stated in EU 2016/2281 Table 21
(3) Performance data (Nett) is supplied in accordance with EN14511-1:2013.
(4) Performance data (Gross) is supplied excluding absorbed pump power as per EN14511-1:2013.
(5) All performance data based upon standard waterside configuration.

Technical Data

TCC12R08S-04, TCC12R10S-04, TCC12R12S-04

Ecodesign

	Notes:		TCC12R08S-04	TCC12R10S-04	TCC12R12S-04
SEPR	1,3,5		7.3	7.6	7.7
SEPR Tier			Tier 2 (2021)	Tier 2 (2021)	Tier 2 (2021)
Annual Electricity Consumption		kWh/a	475941.2	488132.1	510420.6
Rated Refrigerant Capacity P_A	1,3,5	kW	468.6	498.4	528.2
Rated Power Input D_A		kW	143.1	145.8	151.7
Rated $EER_{DC,A}$			3.28	3.42	3.48
Declared Refrigerant Capacity P_B	1,3,5	kW	437.3	465.1	492.8
Declared Power Input D_B		kW	95.6	97.7	101.0
Declared $EER_{DC,B}$			4.58	4.76	4.88
Declared Refrigerant Capacity P_C	1,3,5	kW	406.0	431.7	457.5
Declared Power Input D_C		kW	61.8	63.5	66.1
Declared $EER_{DC,C}$			6.57	6.80	6.92
Declared Refrigerant Capacity P_D	1,3,5	kW	374.6	398.4	422.2
Declared Power Input D_D		kW	36.7	37.7	39.8
Declared $EER_{DC,D}$			10.20	10.58	10.60
SSCEE	2,3,5	%	190.8	216.2	206.7
SSCEE Tier			Tier 2 (2021)	Tier 2 (2021)	Tier 2 (2021)
Rated Cooling Capacity $P_{rated,c}$	2,4,5	kW	470.0	500.0	530.0
Declared Cooling Capacity 35°C Pdc	2,3,5	kW	468.6	498.4	528.2
Declared EER_d 35°C			3.28	3.42	3.48
Declared Cooling Capacity 30°C Pdc	2,3,5	kW	344.9	366.8	388.7
Declared EER_d 30°C			4.21	4.43	4.57
Declared Cooling Capacity 25°C Pdc	2,3,5	kW	221.3	235.3	249.2
Declared EER_d 25°C			5.81	5.91	6.32
Declared Cooling Capacity 20°C Pdc	2,3,5	kW	74.0	103.7	109.8
Declared EER_d 20°C			5.24	7.70	5.74
Sound Power Level		dB(A)	91	90	90
Air Volume		m³/h	165301	206626	247951
Off mode P_{OFF}		kW	0.30	0.30	0.30
Thermostat-off mode P_{TO}		kW	1.38	1.59	1.82
Standby Mode P_{SB}		kW	0.45	0.46	0.47
Crankcase heater mode P_{CK}		kW	0.00	0.00	0.00

(1) Nominal conditions as stated in EU 2016/2281 Table 22.
(2) Nominal conditions as stated in EU 2016/2281 Table 21
(3) Performance data (Nett) is supplied in accordance with EN14511-1:2013.
(4) Performance data (Gross) is supplied excluding absorbed pump power as per EN14511-1:2013.
(5) All performance data based upon standard waterside configuration.

Technical Data

TCC12R14S-02, TCC12R10L-05, TCC12R12L-06

Ecodesign

	Notes:		TCC12R14S-04	TCC12R10L-05	TCC12R12L-06
SEPR	1,3,5		7.7	7.0	7.2
SEPR Tier			Tier 2 (2021)	Tier 2 (2021)	Tier 2 (2021)
Annual Electricity Consumption		kWh/a	541142.5	633751.5	688770.9
Rated Refrigerant Capacity P_A	1,3,5	kW	557.9	598.2	668.2
Rated Power Input D_A		kW	158.9	198.8	214.4
Rated $EER_{DC,A}$			3.51	3.01	3.12
Declared Refrigerant Capacity P_B	1,3,5	kW	520.6	558.2	623.5
Declared Power Input D_B		kW	105.7	130.5	140.0
Declared $EER_{DC,B}$			4.92	4.28	4.45
Declared Refrigerant Capacity P_C	1,3,5	kW	483.3	518.2	578.9
Declared Power Input D_C		kW	69.7	82.2	89.2
Declared $EER_{DC,C}$			6.93	6.31	6.49
Declared Refrigerant Capacity P_D	1,3,5	kW	445.9	478.2	534.2
Declared Power Input D_D		kW	42.7	48.2	52.9
Declared $EER_{DC,D}$			10.44	9.91	10.09
SSCEE	2,3,5	%	224.5	203.6	207.1
SSCEE Tier			Tier 2 (2021)	Tier 2 (2021)	Tier 2 (2021)
Rated Cooling Capacity $P_{rated,c}$	2,4,5	kW	560.0	600.0	670.0
Declared Cooling Capacity 35°C Pdc	2,3,5	kW	557.9	598.2	668.2
Declared EER_d 35°C			3.51	3.01	3.12
Declared Cooling Capacity 30°C Pdc	2,3,5	kW	410.6	440.3	491.9
Declared EER_d 30°C			4.67	4.15	4.01
Declared Cooling Capacity 25°C Pdc	2,3,5	kW	263.2	282.4	315.6
Declared EER_d 25°C			6.34	5.86	6.03
Declared Cooling Capacity 20°C Pdc	2,3,5	kW	115.8	124.5	139.2
Declared EER_d 20°C			7.64	6.84	7.11
Sound Power Level		dB(A)	90	92	92
Air Volume		m³/h	289276	206626	247951
Off mode P_{OFF}		kW	0.301	0.301	0.301
Thermostat-off mode P_{TO}		kW	2.070	1.787	1.815
Standby Mode P_{SB}		kW	0.483	0.463	0.473
Crankcase heater mode P_{CK}		kW	0.000	0.000	0.000

(1) Nominal conditions as stated in EU 2016/2281 Table 22.
(2) Nominal conditions as stated in EU 2016/2281 Table 21
(3) Performance data (Nett) is supplied in accordance with EN14511-1:2013.
(4) Performance data (Gross) is supplied excluding absorbed pump power as per EN14511-1:2013.
(5) All performance data based upon standard waterside configuration.

Technical Data

TCC12R14L-06, TCC12R16L-06, TCC12R18L-06, TCC12R20L-06

Ecodesign

	Notes:		TCC12R14L-06	TCC12R16L-06	TCC12R18L-06	TCC12R20L-06
SEPR	1,3,5		7.2	7.1	6.8	6.7
SEPR Tier			Tier 2 (2021)	Tier 2 (2021)	Tier 2 (2021)	Tier 2 (2021)
Annual Electricity Consumption		kWh/a	776002.3	836788.0	926984.5	998156.6
Rated Refrigerant Capacity P_A	1,3,5	kW	747.6	797.2	846.8	896.3
Rated Power Input D_A		kW	240.8	255.7	279.6	299.3
Rated $EER_{DC,A}$			3.10	3.12	3.03	2.99
Declared Refrigerant Capacity P_B	1,3,5	kW	697.6	743.9	790.1	836.3
Declared Power Input D_B		kW	155.9	164.9	176.5	189.6
Declared $EER_{DC,B}$			4.48	4.51	4.48	4.41
Declared Refrigerant Capacity P_C	1,3,5	kW	647.6	690.6	733.5	776.3
Declared Power Input D_C		kW	99.8	106.1	112.8	121.1
Declared $EER_{DC,C}$			6.49	6.51	6.50	6.41
Declared Refrigerant Capacity P_D	1,3,5	kW	597.6	637.2	676.8	716.3
Declared Power Input D_D		kW	60.4	66.8	78.5	84.8
Declared $EER_{DC,D}$			9.90	9.54	8.62	8.45
SSCEE	2,3,5	%	209.8	200.7	211.4	210.5
SSCEE Tier			Tier 2 (2021)	Tier 2 (2021)	Tier 2 (2021)	Tier 2 (2021)
Rated Cooling Capacity $P_{rated,c}$	2,4,5	kW	750.0	800.0	850.0	900.0
Declared Cooling Capacity 35°C Pdc	2,3,5	kW	747.6	797.2	846.8	896.3
Declared EER_d 35°C			3.10	3.12	3.03	2.99
Declared Cooling Capacity 30°C Pdc	2,3,5	kW	550.3	586.7	623.1	659.5
Declared EER_d 30°C			4.12	4.23	4.31	4.36
Declared Cooling Capacity 25°C Pdc	2,3,5	kW	352.9	376.2	399.4	422.6
Declared EER_d 25°C			6.04	6.07	6.02	5.97
Declared Cooling Capacity 20°C Pdc	2,3,5	kW	155.5	165.7	175.8	185.8
Declared EER_d 20°C			7.32	5.98	7.39	7.36
Sound Power Level		dB(A)	92	92	92	92
Air Volume		m³/h	289276	330601	371926	413252
Off mode P_{OFF}		kW	0.301	0.301	0.301	0.301
Thermostat-off mode P_{TO}		kW	2.368	2.762	3.195	3.670
Standby Mode P_{SB}		kW	0.483	0.493	0.503	0.513
Crankcase heater mode P_{CK}		kW	0.000	0.000	0.000	0.000

(1) Nominal conditions as stated in EU 2016/2281 Table 22.
(2) Nominal conditions as stated in EU 2016/2281 Table 21
(3) Performance data (Nett) is supplied in accordance with EN14511-1:2013.
(4) Performance data (Gross) is supplied excluding absorbed pump power as per EN14511-1:2013.
(5) All performance data based upon standard waterside configuration.

Technical Data

TCC22R08S-14,TCC22R10S-14, TCC22R12S-14, TCC22R14S-14

Ecodesign

	Notes:		TCC22R08S-14	TCC22R10S-14	TCC22R12S-14	TCC22R14S-14
SEPR	1,3,5		7.4	7.7	7.8	7.8
SEPR Tier			Tier 2 (2021)	Tier 2 (2021)	Tier 2 (2021)	Tier 2 (2021)
Annual Electricity Consumption		kWh/a	468753.5	479102.0	500564.0	530251.9
Rated Refrigerant Capacity P_A	1,3,5	kW	468.8	498.6	528.4	558.2
Rated Power Input D_A		kW	141.5	143.9	149.3	156.1
Rated $EER_{DC,A}$			3.31	3.46	3.54	3.58
Declared Refrigerant Capacity P_B	1,3,5	kW	437.4	465.2	493.0	520.8
Declared Power Input D_B		kW	94.7	96.6	99.6	104.2
Declared $EER_{DC,B}$			4.62	4.82	4.95	5.00
Declared Refrigerant Capacity P_C	1,3,5	kW	406.1	431.9	457.7	483.5
Declared Power Input D_C		kW	61.1	62.6	65.1	68.6
Declared $EER_{DC,C}$			6.65	6.90	7.03	7.05
Declared Refrigerant Capacity P_D	1,3,5	kW	374.8	398.6	422.4	446.2
Declared Power Input D_D		kW	36.0	36.7	38.8	41.6
Declared $EER_{DC,D}$			10.42	10.87	10.90	10.73
SSCEE	2,3,5	%	183.4	211.3	216.5	220.0
SSCEE Tier			Tier 2 (2021)	Tier 2 (2021)	Tier 2 (2021)	Tier 2 (2021)
Rated Cooling Capacity $P_{rated,c}$	2,4,5	kW	470.0	500.0	530.0	560.0
Declared Cooling Capacity 35°C Pdc	2,3,5	kW	468.8	498.6	528.4	558.2
Declared EER_d 35°C			3.31	3.46	3.54	3.58
Declared Cooling Capacity 30°C Pdc	2,3,5	kW	345.1	367.0	388.9	410.8
Declared EER_d 30°C			4.23	4.46	4.61	4.72
Declared Cooling Capacity 25°C Pdc	2,3,5	kW	221.4	235.4	249.4	263.4
Declared EER_d 25°C			5.80	5.92	6.09	6.21
Declared Cooling Capacity 20°C Pdc	2,3,5	kW	82.1	103.8	110.0	116.1
Declared EER_d 20°C			4.54	6.90	7.02	7.10
Sound Power Level		dB(A)	91	90	90	90
Air Volume		m³/h	165301	206626	247951	289276
Off mode P_{OFF}		kW	0.322	0.322	0.322	0.322
Thermostat-off mode P_{TO}		kW	1.233	1.421	1.624	1.844
Standby Mode P_{SB}		kW	0.474	0.484	0.494	0.504
Crankcase heater mode P_{CK}		kW	0.000	0.000	0.000	0.000

(1) Nominal conditions as stated in EU 2016/2281 Table 22.
(2) Nominal conditions as stated in EU 2016/2281 Table 21
(3) Performance data (Nett) is supplied in accordance with EN14511-1:2013.
(4) Performance data (Gross) is supplied excluding absorbed pump power as per EN14511-1:2013.
(5) All performance data based upon standard waterside configuration.

Technical Data

TCC22R10L-15, TCC22R12L-15, TCC22R14L-15

Ecodesign

	Notes:		TCC22R10L-15	TCC22R12L-15	TCC22R14L-15
SEPR	1,3,5		7.2	7.4	7.4
SEPR Tier			Tier 2 (2021)	Tier 2 (2021)	Tier 2 (2021)
Annual Electricity Consumption		kWh/a	613943.8	670058.8	752210.7
Rated Refrigerant Capacity P_A	1,3,5	kW	598.6	668.2	747.6
Rated Power Input D_A		kW	193.1	208.5	232.9
Rated $EER_{DC,A}$			3.10	3.20	3.21
Declared Refrigerant Capacity P_B	1,3,5	kW	558.6	623.5	697.6
Declared Power Input D_B		kW	127.1	136.7	151.5
Declared $EER_{DC,B}$			4.40	4.56	4.60
Declared Refrigerant Capacity P_C	1,3,5	kW	518.6	578.9	647.6
Declared Power Input D_C		kW	79.7	87.0	97.2
Declared $EER_{DC,C}$			6.50	6.65	6.66
Declared Refrigerant Capacity P_D	1,3,5	kW	478.6	534.2	597.6
Declared Power Input D_D		kW	46.6	51.2	58.2
Declared $EER_{DC,D}$			10.27	10.43	10.28
SSCEE	2,3,5	%	180.7	190.4	194.9
SSCEE Tier			Tier 2 (2021)	Tier 2 (2021)	Tier 2 (2021)
Rated Cooling Capacity $P_{rated,c}$	2,4,5	kW	600.0	670.0	750.0
Declared Cooling Capacity 35°C Pdc	2,3,5	kW	598.6	668.2	747.6
Declared EER_d 35°C			3.10	3.20	3.21
Declared Cooling Capacity 30°C Pdc	2,3,5	kW	440.7	491.9	550.3
Declared EER_d 30°C			3.89	4.07	4.21
Declared Cooling Capacity 25°C Pdc	2,3,5	kW	282.8	315.6	352.9
Declared EER_d 25°C			4.81	5.29	5.41
Declared Cooling Capacity 20°C Pdc	2,3,5	kW	124.9	139.2	155.5
Declared EER_d 20°C			5.98	6.04	6.23
Sound Power Level		dB(A)	92	92	92
Air Volume		m³/h	206626	273346	289276
Off mode P_{OFF}		kW	0.322	0.322	0.322
Thermostat-off mode P_{TO}		kW	1.396	1.805	2.350
Standby Mode P_{SB}		kW	0.484	0.494	0.504
Crankcase heater mode P_{CK}		kW	0.000	0.000	0.000

(1) Nominal conditions as stated in EU 2016/2281 Table 22.
(2) Nominal conditions as stated in EU 2016/2281 Table 21
(3) Performance data (Nett) is supplied in accordance with EN14511-1:2013.
(4) Performance data (Gross) is supplied excluding absorbed pump power as per EN14511-1:2013.
(5) All performance data based upon standard waterside configuration.

Technical Data

TCC22R16L-16, TCC22R18L-16, TCC22R20L-16

Ecodesign

	Notes:		TCC22R16L-16	TCC22R18L-16	TCC22R20L-16
SEPR	1,3,5		7.4	7.1	7.0
SEPR Tier			Tier 2 (2021)	Tier 2 (2021)	Tier 2 (2021)
Annual Electricity Consumption		kWh/a	806431.2	891282.7	958576.6
Rated Refrigerant Capacity P_A	1,3,5	kW	797.5	847.1	896.7
Rated Power Input D_A		kW	245.7	266.6	284.8
Rated $EER_{DC,A}$			3.25	3.18	3.15
Declared Refrigerant Capacity P_B	1,3,5	kW	744.2	790.5	836.7
Declared Power Input D_B		kW	159.1	169.9	181.7
Declared $EER_{DC,B}$			4.68	4.65	4.60
Declared Refrigerant Capacity P_C	1,3,5	kW	690.8	733.8	776.7
Declared Power Input D_C		kW	102.5	108.9	116.8
Declared $EER_{DC,C}$			6.74	6.74	6.65
Declared Refrigerant Capacity P_D	1,3,5	kW	637.5	677.1	716.7
Declared Power Input D_D		kW	64.2	75.2	81.3
Declared $EER_{DC,D}$			9.93	9.00	8.81
SSCEE	2,3,5	%	187.7	193.4	195.6
SSCEE Tier			Tier 2 (2021)	Tier 2 (2021)	Tier 2 (2021)
Rated Cooling Capacity $P_{rated,c}$	2,4,5	kW	800.0	850.0	900.0
Declared Cooling Capacity 35°C Pdc	2,3,5	kW	797.5	847.1	896.7
Declared EER_d 35°C			3.25	3.18	3.15
Declared Cooling Capacity 30°C Pdc	2,3,5	kW	587.0	623.4	659.9
Declared EER_d 30°C			4.35	4.44	4.50
Declared Cooling Capacity 25°C Pdc	2,3,5	kW	376.5	399.8	423.0
Declared EER_d 25°C			5.58	5.69	5.80
Declared Cooling Capacity 20°C Pdc	2,3,5	kW	165.9	176.1	186.2
Declared EER_d 20°C			5.04	5.42	5.47
Sound Power Level		dB(A)	92	92	92
Air Volume		m³/h	330601	371926	413252
Off mode P_{OFF}		kW	0.322	0.322	0.322
Thermostat-off mode P_{TO}		kW	2.495	2.880	3.299
Standby Mode P_{SB}		kW	0.514	0.524	0.534
Crankcase heater mode P_{CK}		kW	0.000	0.000	0.000

(1) Nominal conditions as stated in EU 2016/2281 Table 22.
(2) Nominal conditions as stated in EU 2016/2281 Table 21
(3) Performance data (Nett) is supplied in accordance with EN14511-1:2013.
(4) Performance data (Gross) is supplied excluding absorbed pump power as per EN14511-1:2013.
(5) All performance data based upon standard waterside configuration.

Technical Data

TCC23R12S-17, TCC23R14S-17, TCC23R16S-17, TCC23R18S-17

Ecodesign

	Notes:		TCC23R12S-17	TCC23R14S-17	TCC23R16S-17	TCC23R18S-17
SEPR	1,3,5		7.6	7.7	7.8	7.7
SEPR Tier			Tier 2 (2021)	Tier 2 (2021)	Tier 2 (2021)	Tier 2 (2021)
Annual Electricity Consumption		kWh/a	611326.4	651395.0	694095.7	745726.1
Rated Refrigerant Capacity P_A	1,3,5	kW	628.7	678.4	728.2	777.8
Rated Power Input D_A		kW	189.4	199.4	210.2	223.8
Rated $EER_{DC,A}$			3.32	3.40	3.46	3.48
Declared Refrigerant Capacity P_B	1,3,5	kW	586.7	633.1	679.5	725.8
Declared Power Input D_B		kW	126.0	133.0	140.5	149.1
Declared $EER_{DC,B}$			4.66	4.76	4.83	4.87
Declared Refrigerant Capacity P_C	1,3,5	kW	544.7	587.8	630.8	673.8
Declared Power Input D_C		kW	80.3	85.1	90.7	97.0
Declared $EER_{DC,C}$			6.78	6.90	6.96	6.95
Declared Refrigerant Capacity P_D	1,3,5	kW	502.7	542.4	582.2	621.8
Declared Power Input D_D		kW	46.0	49.6	53.0	57.7
Declared $EER_{DC,D}$			10.93	10.95	10.98	10.78
SSCEE	2,3,5	%	220.1	224.3	226.4	227.6
SSCEE Tier			Tier 2 (2021)	Tier 2 (2021)	Tier 2 (2021)	Tier 2 (2021)
Rated Cooling Capacity $P_{rated,c}$	2,4,5	kW	630.0	680.0	730.0	780.0
Declared Cooling Capacity 35°C Pdc	2,3,5	kW	628.7	678.4	728.2	777.8
Declared EER_d 35°C			3.32	3.40	3.46	3.48
Declared Cooling Capacity 30°C Pdc	2,3,5	kW	462.9	499.5	536.1	572.6
Declared EER_d 30°C			4.41	4.49	4.48	4.52
Declared Cooling Capacity 25°C Pdc	2,3,5	kW	297.1	320.5	343.9	367.3
Declared EER_d 25°C			5.88	6.06	6.09	6.19
Declared Cooling Capacity 20°C Pdc	2,3,5	kW	131.3	141.6	151.8	162.1
Declared EER_d 20°C			8.25	8.31	8.55	8.45
Sound Power Level		dB(A)	92	92	92	92
Air Volume		m³/h	247951	289276	330601	371926
Off mode P_{OFF}		kW	0.375	0.375	0.375	0.375
Thermostat-off mode P_{TO}		kW	1.304	1.560	1.843	2.155
Standby Mode P_{SB}		kW	0.596	0.606	0.616	0.626
Crankcase heater mode P_{CK}		kW	0.000	0.000	0.000	0.000

(1) Nominal conditions as stated in EU 2016/2281 Table 22.
(2) Nominal conditions as stated in EU 2016/2281 Table 21
(3) Performance data (Nett) is supplied in accordance with EN14511-1:2013.
(4) Performance data (Gross) is supplied excluding absorbed pump power as per EN14511-1:2013.
(5) All performance data based upon standard waterside configuration.

Technical Data

TCC23R16L-19, TCC23R18L-19

Ecodesign

	Notes:		TCC23R16L-19	TCC23R18L-19
SEPR	1,3,5		7.3	7.4
SEPR Tier			Tier 2 (2021)	Tier 2 (2021)
Annual Electricity Consumption		kWh/a	851896.0	898383.5
Rated Refrigerant Capacity P_A	1,3,5	kW	838.3	898.0
Rated Power Input D_A		kW	272.5	284.5
Rated $EER_{DC,A}$			3.08	3.16
Declared Refrigerant Capacity P_B	1,3,5	kW	782.3	838.0
Declared Power Input D_B		kW	178.1	186.4
Declared $EER_{DC,B}$			4.39	4.50
Declared Refrigerant Capacity P_C	1,3,5	kW	726.3	778.0
Declared Power Input D_C		kW	110.8	116.5
Declared $EER_{DC,C}$			6.56	6.68
Declared Refrigerant Capacity P_D	1,3,5	kW	670.3	718.0
Declared Power Input D_D		kW	64.2	68.2
Declared $EER_{DC,D}$			10.44	10.52
SSCEE	2,3,5	%	208.2	212.6
SSCEE Tier			Tier 2 (2021)	Tier 2 (2021)
Rated Cooling Capacity $P_{rated,c}$	2,4,5	kW	840.0	900.0
Declared Cooling Capacity 35°C Pdc	2,3,5	kW	838.3	898.0
Declared EER_d 35°C			3.08	3.16
Declared Cooling Capacity 30°C Pdc	2,3,5	kW	617.2	661.1
Declared EER_d 30°C			4.21	4.33
Declared Cooling Capacity 25°C Pdc	2,3,5	kW	396.2	424.3
Declared EER_d 25°C			5.49	5.65
Declared Cooling Capacity 20°C Pdc	2,3,5	kW	175.1	187.4
Declared EER_d 20°C			7.84	7.87
Sound Power Level		dB(A)	93	93
Air Volume		m³/h	330601	371926
Off mode P_{OFF}		kW	0.375	0.375
Thermostat-off mode P_{TO}		kW	1.722	2.027
Standby Mode P_{SB}		kW	0.616	0.626
Crankcase heater mode P_{CK}		kW	0.000	0.000

(1) Nominal conditions as stated in EU 2016/2281 Table 22.
(2) Nominal conditions as stated in EU 2016/2281 Table 21
(3) Performance data (Nett) is supplied in accordance with EN14511-1:2013.
(4) Performance data (Gross) is supplied excluding absorbed pump power as per EN14511-1:2013.
(5) All performance data based upon standard waterside configuration.

Technical Data

TCC23R20L-20, TCC23R22L-20, TCC23R24L-20

Ecodesign

	Notes:		TCC23R20L-20	TCC23R22L-20	TCC23R24L-20
SEPR	1,3,5		7.5	7.5	7.5
SEPR Tier			Tier 2 (2021)	Tier 2 (2021)	Tier 2 (2021)
Annual Electricity Consumption		kWh/a	949037.2	1003282.1	1064142.7
Rated Refrigerant Capacity P_A	1,3,5	kW	957.8	1017.5	1077.1
Rated Power Input D_A		kW	297.4	313.9	331.7
Rated $EER_{DC,A}$			3.22	3.24	3.25
Declared Refrigerant Capacity P_B	1,3,5	kW	893.8	949.5	1005.1
Declared Power Input D_B		kW	194.9	204.6	215.3
Declared $EER_{DC,B}$			4.59	4.64	4.67
Declared Refrigerant Capacity P_C	1,3,5	kW	829.8	881.5	933.1
Declared Power Input D_C		kW	122.9	130.0	137.2
Declared $EER_{DC,C}$			6.75	6.78	6.80
Declared Refrigerant Capacity P_D	1,3,5	kW	765.8	813.5	861.1
Declared Power Input D_D		kW	72.6	76.9	82.3
Declared $EER_{DC,D}$			10.55	10.57	10.46
SSCEE	2,3,5	%	214.2	216.9	217.3
SSCEE Tier			Tier 2 (2021)	Tier 2 (2021)	Tier 2 (2021)
Rated Cooling Capacity $P_{rated,c}$	2,4,5	kW	960.0	1020.0	1080.0
Declared Cooling Capacity 35°C Pdc	2,3,5	kW	957.8	1017.5	1077.1
Declared EER_d 35°C			3.22	3.24	3.25
Declared Cooling Capacity 30°C Pdc	2,3,5	kW	705.2	749.0	792.9
Declared EER_d 30°C			4.38	4.35	4.35
Declared Cooling Capacity 25°C Pdc	2,3,5	kW	452.5	480.6	508.7
Declared EER_d 25°C			5.77	5.81	5.92
Declared Cooling Capacity 20°C Pdc	2,3,5	kW	199.9	212.2	224.5
Declared EER_d 20°C			7.69	8.06	7.94
Sound Power Level		dB(A)	93	93	93
Air Volume		m³/h	413252	454577	495902
Off mode P_{OFF}		kW	0.375	0.375	0.375
Thermostat-off mode P_{TO}		kW	2.191	2.532	2.904
Standby Mode P_{SB}		kW	0.636	0.646	0.656
Crankcase heater mode P_{CK}		kW	0.000	0.000	0.000

(1) Nominal conditions as stated in EU 2016/2281 Table 22.
(2) Nominal conditions as stated in EU 2016/2281 Table 21
(3) Performance data (Nett) is supplied in accordance with EN14511-1:2013.
(4) Performance data (Gross) is supplied excluding absorbed pump power as per EN14511-1:2013.
(5) All performance data based upon standard waterside configuration.

Technical Data

TCC24R16S-18, TCC24R18S-18

Ecodesign

	Notes:		TCC24R16S-18	TCC24R18S-18
SEPR	1,3,5		7.6	7.7
SEPR Tier			Tier 2 (2021)	Tier 2 (2021)
Annual Electricity Consumption		kWh/a	801087.0	825448.3
Rated Refrigerant Capacity P_A	1,3,5	kW	818.1	857.9
Rated Power Input D_A		kW	249.1	255.8
Rated $EER_{DC,A}$			3.28	3.35
Declared Refrigerant Capacity P_B	1,3,5	kW	763.4	800.5
Declared Power Input D_B		kW	165.6	170.0
Declared $EER_{DC,B}$			4.61	4.71
Declared Refrigerant Capacity P_C	1,3,5	kW	708.8	743.2
Declared Power Input D_C		kW	105.1	108.4
Declared $EER_{DC,C}$			6.74	6.86
Declared Refrigerant Capacity P_D	1,3,5	kW	654.1	685.9
Declared Power Input D_D		kW	60.2	62.1
Declared $EER_{DC,D}$			10.86	11.05
SSCEE	2,3,5	%	220.8	222.4
SSCEE Tier			Tier 2 (2021)	Tier 2 (2021)
Rated Cooling Capacity $P_{rated,c}$	2,4,5	kW	820.0	860.0
Declared Cooling Capacity 35°C Pdc	2,3,5	kW	818.1	857.9
Declared EER_d 35°C			3.28	3.35
Declared Cooling Capacity 30°C Pdc	2,3,5	kW	602.3	631.6
Declared EER_d 30°C			4.42	4.39
Declared Cooling Capacity 25°C Pdc	2,3,5	kW	386.5	405.2
Declared EER_d 25°C			6.18	6.26
Declared Cooling Capacity 20°C Pdc	2,3,5	kW	170.7	178.9
Declared EER_d 20°C			7.81	7.87
Sound Power Level		dB(A)	94	93
Air Volume		m³/h	330601	371926
Off mode P_{OFF}		kW	0.427	0.427
Thermostat-off mode P_{TO}		kW	1.900	2.124
Standby Mode P_{SB}		kW	0.719	0.729
Crankcase heater mode P_{CK}		kW	0.000	0.000

(1) Nominal conditions as stated in EU 2016/2281 Table 22.
(2) Nominal conditions as stated in EU 2016/2281 Table 21
(3) Performance data (Nett) is supplied in accordance with EN14511-1:2013.
(4) Performance data (Gross) is supplied excluding absorbed pump power as per EN14511-1:2013.
(5) All performance data based upon standard waterside configuration.

Technical Data

TCC24R20S-18, TCC24R22S-18, TCC24R24S-18

Ecodesign

	Notes:		TCC24R20S-18	TCC24R22S-18	TCC24R24S-18
SEPR	1,3,5		7.8	7.8	7.8
SEPR Tier			Tier 2 (2021)	Tier 2 (2021)	Tier 2 (2021)
Annual Electricity Consumption		kWh/a	857467.8	903647.5	954380.5
Rated Refrigerant Capacity P_A	1,3,5	kW	897.6	947.3	997.0
Rated Power Input D_A		kW	263.1	275.2	287.7
Rated $EER_{DC,A}$			3.41	3.44	3.46
Declared Refrigerant Capacity P_B	1,3,5	kW	837.6	884.0	930.3
Declared Power Input D_B		kW	175.3	183.3	192.3
Declared $EER_{DC,B}$			4.78	4.82	4.84
Declared Refrigerant Capacity P_C	1,3,5	kW	777.6	820.6	863.6
Declared Power Input D_C		kW	112.1	117.8	124.4
Declared $EER_{DC,C}$			6.94	6.97	6.94
Declared Refrigerant Capacity P_D	1,3,5	kW	717.6	757.3	797.0
Declared Power Input D_D		kW	65.1	69.1	73.2
Declared $EER_{DC,D}$			11.02	10.97	10.89
SSCEE	2,3,5	%	222.5	224.8	227.8
SSCEE Tier			Tier 2 (2021)	Tier 2 (2021)	Tier 2 (2021)
Rated Cooling Capacity $P_{rated,c}$	2,4,5	kW	900.0	950.0	1000.0
Declared Cooling Capacity 35°C Pdc	2,3,5	kW	897.6	947.3	997.0
Declared EER_d 35°C			3.41	3.44	3.46
Declared Cooling Capacity 30°C Pdc	2,3,5	kW	660.8	697.3	733.8
Declared EER_d 30°C			4.43	4.47	4.49
Declared Cooling Capacity 25°C Pdc	2,3,5	kW	424.0	447.3	470.7
Declared EER_d 25°C			6.32	6.35	6.34
Declared Cooling Capacity 20°C Pdc	2,3,5	kW	187.1	197.3	207.5
Declared EER_d 20°C			7.68	7.88	8.30
Sound Power Level		dB(A)	93	93	93
Air Volume		m³/h	413252	454577	495902
Off mode P_{OFF}		kW	0.427	0.427	0.427
Thermostat-off mode P_{TO}		kW	2.363	2.684	3.030
Standby Mode P_{SB}		kW	0.739	0.749	0.759
Crankcase heater mode P_{CK}		kW	0.000	0.000	0.000

(1) Nominal conditions as stated in EU 2016/2281 Table 22.
(2) Nominal conditions as stated in EU 2016/2281 Table 21
(3) Performance data (Nett) is supplied in accordance with EN14511-1:2013.
(4) Performance data (Gross) is supplied excluding absorbed pump power as per EN14511-1:2013.
(5) All performance data based upon standard waterside configuration.

Technical Data

TCC24R20L-21, TCC24R22L-21, TCC24R24L-21

Ecodesign

	Notes:		TCC24R20L-21	TCC24R22L-21	TCC24R24L-21
SEPR	1,3,5		7.2	6.8	7.4
SEPR Tier			Tier 2 (2021)	Tier 2 (2021)	Tier 2 (2021)
Annual Electricity Consumption		kWh/a	1066201.5	1199019.7	1166151.1
Rated Refrigerant Capacity P_A	1,3,5	kW	1038.0	1097.7	1157.5
Rated Power Input D_A		kW	341.4	359.2	371.8
Rated $EER_{DC,A}$			3.04	3.06	3.11
Declared Refrigerant Capacity P_B	1,3,5	kW	968.7	1024.4	1080.1
Declared Power Input D_B		kW	220.3	231.8	242.8
Declared $EER_{DC,B}$			4.40	4.42	4.45
Declared Refrigerant Capacity P_C	1,3,5	kW	899.4	951.1	1002.8
Declared Power Input D_C		kW	139.2	173.2	150.9
Declared $EER_{DC,C}$			6.46	5.49	6.65
Declared Refrigerant Capacity P_D	1,3,5	kW	830.0	877.7	925.5
Declared Power Input D_D		kW	80.6	84.3	88.6
Declared $EER_{DC,D}$			10.30	10.41	10.45
SSCEE	2,3,5	%	215.0	217.0	207.4
SSCEE Tier			Tier 2 (2021)	Tier 2 (2021)	Tier 2 (2021)
Rated Cooling Capacity $P_{rated,c}$	2,4,5	kW	1040.0	1100.0	1160.0
Declared Cooling Capacity 35°C Pdc	2,3,5	kW	1038.0	1097.7	1157.5
Declared EER_d 35°C			3.04	3.06	3.11
Declared Cooling Capacity 30°C Pdc	2,3,5	kW	764.3	808.3	852.2
Declared EER_d 30°C			4.43	4.42	4.39
Declared Cooling Capacity 25°C Pdc	2,3,5	kW	490.7	518.8	546.9
Declared EER_d 25°C			5.93	6.02	6.09
Declared Cooling Capacity 20°C Pdc	2,3,5	kW	217.0	229.3	241.7
Declared EER_d 20°C			7.56	7.68	6.34
Sound Power Level		dB(A)	95	95	94
Air Volume		m³/h	413252	454577	495902
Off mode P_{OFF}		kW	0.427	0.427	0.427
Thermostat-off mode P_{TO}		kW	1.978	2.252	2.548
Standby Mode P_{SB}		kW	0.739	0.749	0.759
Crankcase heater mode P_{CK}		kW	0.000	0.000	0.000

(1) Nominal conditions as stated in EU 2016/2281 Table 22.
(2) Nominal conditions as stated in EU 2016/2281 Table 21
(3) Performance data (Nett) is supplied in accordance with EN14511-1:2013.
(4) Performance data (Gross) is supplied excluding absorbed pump power as per EN14511-1:2013.
(5) All performance data based upon standard waterside configuration.

Technical Data - TCC X

TCC11X04S-01, TCC11X06S-01, TCC11X08S-01

Ecodesign

	Notes:		TCC11X04S-01	TCC11X06S-01	TCC11X08S-01
SEPR	1,3,5		8.1	8.7	9.2
SEPR Tier			Tier 2 (2021)	Tier 2 (2021)	Tier 2 (2021)
Annual Electricity Consumption		kWh/a	182178.3	190678.3	189981.8
Rated Refrigerant Capacity P_A	1,3,5	kW	199.4	224.3	234.2
Rated Power Input D_A		kW	58.4	58.5	58.1
Rated $EER_{DC,A}$			3.41	3.83	4.03
Declared Refrigerant Capacity P_B	1,3,5	kW	186.1	209.3	218.5
Declared Power Input D_B		kW	37.8	39.1	38.8
Declared $EER_{DC,B}$			4.92	5.35	5.64
Declared Refrigerant Capacity P_C	1,3,5	kW	172.7	194.3	202.9
Declared Power Input D_C		kW	23.9	24.9	24.6
Declared $EER_{DC,C}$			7.23	7.80	8.26
Declared Refrigerant Capacity P_D	1,3,5	kW	159.4	179.3	187.2
Declared Power Input D_D		kW	13.6	14.4	14.6
Declared $EER_{DC,D}$			11.71	12.42	12.84
SSCEE	2,3,5	%	184.0	223.7	233.4
SSCEE Tier			Tier 2 (2021)	Tier 2 (2021)	Tier 2 (2021)
Rated Cooling Capacity $P_{rated,c}$	2,4,5	kW	200.0	225.0	235.0
Declared Cooling Capacity 35°C Pdc	2,3,5	kW	199.4	224.3	234.2
Declared EER_d 35°C			3.41	3.83	4.03
Declared Cooling Capacity 30°C Pdc	2,3,5	kW	146.8	165.1	172.4
Declared EER_d 30°C			4.41	4.83	5.08
Declared Cooling Capacity 25°C Pdc	2,3,5	kW	111.5	105.8	110.5
Declared EER_d 25°C			4.53	6.51	6.74
Declared Cooling Capacity 20°C Pdc	2,3,5	kW	86.6	80.7	80.1
Declared EER_d 20°C			6.81	7.63	8.02
Sound Power Level		dB(A)	86	87	86
Air Volume		m³/h	82650	123975	165301
Off mode P_{OFF}		kW	0.427	0.427	0.427
Thermostat-off mode P_{TO}		kW	0.595	0.738	0.800
Standby Mode P_{SB}		kW	0.739	0.749	0.759
Crankcase heater mode P_{CK}		kW	0.000	0.000	0.000

(1) Nominal conditions as stated in EU 2016/2281 Table 22.
(2) Nominal conditions as stated in EU 2016/2281 Table 21
(3) Performance data (Nett) is supplied in accordance with EN14511-1:2013.
(4) Performance data (Gross) is supplied excluding absorbed pump power as per EN14511-1:2013.
(5) All performance data based upon standard waterside configuration.

Technical Data

TCC11X06L-02, TCC11X08L-03, TCC11X10L-03

Ecodesign

	Notes:		TCC11X06L-02	TCC11X08L-03	TCC11X10L-03
SEPR	1,3,5		7.5	7.8	7.5
SEPR Tier			Tier 2 (2021)	Tier 2 (2021)	Tier 2 (2021)
Annual Electricity Consumption		kWh/a	344944.1	366576.5	402592.9
Rated Refrigerant Capacity P_A	1,3,5	kW	349.5	383.5	408.3
Rated Power Input D_A		kW	113.6	115.1	117.8
Rated $EER_{DC,A}$			3.08	3.33	3.47
Declared Refrigerant Capacity P_B	1,3,5	kW	326.2	357.8	380.9
Declared Power Input D_B		kW	71.0	73.1	75.5
Declared $EER_{DC,B}$			4.59	4.90	5.05
Declared Refrigerant Capacity P_C	1,3,5	kW	302.9	332.2	353.6
Declared Power Input D_C		kW	44.5	47.0	48.8
Declared $EER_{DC,C}$			6.81	7.06	7.25
Declared Refrigerant Capacity P_D	1,3,5	kW	279.5	306.5	326.3
Declared Power Input D_D		kW	26.5	28.6	34.5
Declared $EER_{DC,D}$			10.56	10.71	9.46
SSCEE	2,3,5	%	192.2	206.1	213.3
SSCEE Tier			Tier 2 (2021)	Tier 2 (2021)	Tier 2 (2021)
Rated Cooling Capacity $P_{rated,c}$	2,4,5	kW	350.0	385.0	410.0
Declared Cooling Capacity 35°C Pdc	2,3,5	kW	349.5	383.5	408.3
Declared EER_d 35°C			3.08	3.33	3.47
Declared Cooling Capacity 30°C Pdc	2,3,5	kW	257.4	282.2	300.4
Declared EER_d 30°C			4.24	4.49	4.70
Declared Cooling Capacity 25°C Pdc	2,3,5	kW	165.3	180.9	192.5
Declared EER_d 25°C			4.77	5.72	5.98
Declared Cooling Capacity 20°C Pdc	2,3,5	kW	103.6	99.0	96.4
Declared EER_d 20°C			7.29	7.11	7.21
Sound Power Level		dB(A)	87	87	87
Air Volume		m³/h	123975	165301	206626
Off mode P_{OFF}		kW	0.427	0.427	0.427
Thermostat-off mode P_{TO}		kW	0.456	1.503	1.740
Standby Mode P_{SB}		kW	0.739	0.749	0.759
Crankcase heater mode P_{CK}		kW	0.000	0.000	0.000

(1) Nominal conditions as stated in EU 2016/2281 Table 22.
(2) Nominal conditions as stated in EU 2016/2281 Table 21
(3) Performance data (Nett) is supplied in accordance with EN14511-1:2013.
(4) Performance data (Gross) is supplied excluding absorbed pump power as per EN14511-1:2013.
(5) All performance data based upon standard waterside configuration.

Technical Data

TCC12X08S-04, TCC12X10S-04, TCC12X12S-04

Ecodesign

	Notes:		TCC12X08S-04	TCC12X10S-04	TCC12X12S-04
SEPR	1,3,5		7.8	8.1	8.3
SEPR Tier			Tier 2 (2021)	Tier 2 (2021)	Tier 2 (2021)
Annual Electricity Consumption		kWh/a	407458.2	419171.9	437004.7
Rated Refrigerant Capacity P_A	1,3,5	kW	428.9	458.7	488.5
Rated Power Input D_A		kW	129.4	129.3	132.4
Rated $EER_{DC,A}$			3.31	3.55	3.69
Declared Refrigerant Capacity P_B	1,3,5	kW	400.2	428.0	455.8
Declared Power Input D_B		kW	84.0	85.4	88.5
Declared $EER_{DC,B}$			4.76	5.01	5.15
Declared Refrigerant Capacity P_C	1,3,5	kW	371.5	397.4	423.1
Declared Power Input D_C		kW	53.3	54.7	57.1
Declared $EER_{DC,C}$			6.97	7.26	7.41
Declared Refrigerant Capacity P_D	1,3,5	kW	342.9	366.7	390.5
Declared Power Input D_D		kW	30.7	31.9	33.3
Declared $EER_{DC,D}$			11.17	11.50	11.72
SSCEE	2,3,5	%	210.7	216.6	214.1
SSCEE Tier			Tier 2 (2021)	Tier 2 (2021)	Tier 2 (2021)
Rated Cooling Capacity $P_{rated,c}$	2,4,5	kW	430.0	460.0	490.0
Declared Cooling Capacity 35°C Pdc	2,3,5	kW	428.9	458.7	488.5
Declared EER_d 35°C			3.31	3.55	3.69
Declared Cooling Capacity 30°C Pdc	2,3,5	kW	315.7	337.6	359.5
Declared EER_d 30°C			4.45	4.57	4.73
Declared Cooling Capacity 25°C Pdc	2,3,5	kW	202.6	216.6	230.6
Declared EER_d 25°C			6.20	6.38	6.29
Declared Cooling Capacity 20°C Pdc	2,3,5	kW	75.2	73.0	101.6
Declared EER_d 20°C			6.43	6.55	6.12
Sound Power Level		dB(A)	89	90	90
Air Volume		m³/h	165301	206626	247951
Off mode P_{OFF}		kW	0.249	0.249	0.249
Thermostat-off mode P_{TO}		kW	1.128	1.314	1.518
Standby Mode P_{SB}		kW	0.340	0.350	0.340
Crankcase heater mode P_{CK}		kW	0.000	0.000	0.000

(1) Nominal conditions as stated in EU 2016/2281 Table 22.
(2) Nominal conditions as stated in EU 2016/2281 Table 21
(3) Performance data (Nett) is supplied in accordance with EN14511-1:2013.
(4) Performance data (Gross) is supplied excluding absorbed pump power as per EN14511-1:2013.
(5) All performance data based upon standard waterside configuration.

Technical Data

TCC12X14S-04, TCC12X10L-05, TCC12X12L-06

Ecodesign

	Notes:		TCC12X14S-04	TCC12X10L-05	TCC12X12L-06
SEPR	1,3,5		8.3	7.4	7.6
SEPR Tier			Tier 2 (2021)	Tier 2 (2021)	Tier 2 (2021)
Annual Electricity Consumption		kWh/a	462468.7	561624.4	612192.3
Rated Refrigerant Capacity P_A	1,3,5	kW	518.3	558.5	628.4
Rated Power Input D_A		kW	138.4	187.6	198.5
Rated $EER_{DC,A}$			3.74	2.98	3.17
Declared Refrigerant Capacity P_B	1,3,5	kW	483.6	521.1	586.4
Declared Power Input D_B		kW	92.5	118.9	126.3
Declared $EER_{DC,B}$			5.23	4.38	4.64
Declared Refrigerant Capacity P_C	1,3,5	kW	448.9	483.8	544.4
Declared Power Input D_C		kW	60.0	72.7	79.1
Declared $EER_{DC,C}$			7.48	6.66	6.88
Declared Refrigerant Capacity P_D	1,3,5	kW	414.3	446.5	502.4
Declared Power Input D_D		kW	35.8	42.1	46.7
Declared $EER_{DC,D}$			11.58	10.61	10.76
SSCEE	2,3,5	%	236.6	210.9	206.3
SSCEE Tier			Tier 2 (2021)	Tier 2 (2021)	Tier 2 (2021)
Rated Cooling Capacity $P_{rated,c}$	2,4,5	kW	520.0	560.0	630.0
Declared Cooling Capacity 35°C Pdc	2,3,5	kW	518.3	558.5	628.4
Declared EER_d 35°C			3.74	2.98	3.17
Declared Cooling Capacity 30°C Pdc	2,3,5	kW	381.4	411.1	462.6
Declared EER_d 30°C			4.85	4.45	4.36
Declared Cooling Capacity 25°C Pdc	2,3,5	kW	244.6	263.7	296.8
Declared EER_d 25°C			6.65	6.06	6.25
Declared Cooling Capacity 20°C Pdc	2,3,5	kW	107.7	113.0	131.1
Declared EER_d 20°C			8.08	6.92	6.07
Sound Power Level		dB(A)	90	90	90
Air Volume		m³/h	289276	206626	247951
Off mode P_{OFF}		kW	0.249	0.249	0.301
Thermostat-off mode P_{TO}		kW	1.741	1.524	1.572
Standby Mode P_{SB}		kW	0.350	0.360	0.453
Crankcase heater mode P_{CK}		kW	0.000	0.000	0.000

(1) Nominal conditions as stated in EU 2016/2281 Table 22.
(2) Nominal conditions as stated in EU 2016/2281 Table 21
(3) Performance data (Nett) is supplied in accordance with EN14511-1:2013.
(4) Performance data (Gross) is supplied excluding absorbed pump power as per EN14511-1:2013.
(5) All performance data based upon standard waterside configuration.

Technical Data

TCC12X14L-06, TCC12X16L-06, TCC12X18L-06, TCC12X20L-06

Ecodesign

	Notes:		TCC12X14L-06	TCC12X16L-06	TCC12X18L-06	TCC12X20L-06
SEPR	1,3,5		7.7	7.7	7.6	7.2
SEPR Tier			Tier 2 (2021)	Tier 2 (2021)	Tier 2 (2021)	Tier 2 (2021)
Annual Electricity Consumption		kWh/a	687342.0	733458.2	793424.8	884663.6
Rated Refrigerant Capacity P_A	1,3,5	kW	707.9	757.6	807.2	856.7
Rated Power Input D_A		kW	220.0	231.9	245.8	267.0
Rated $EER_{DC,A}$			3.22	3.27	3.28	3.21
Declared Refrigerant Capacity P_B	1,3,5	kW	660.6	706.9	753.2	799.4
Declared Power Input D_B		kW	139.5	147.1	155.9	167.3
Declared $EER_{DC,B}$			4.74	4.81	4.83	4.78
Declared Refrigerant Capacity P_C	1,3,5	kW	613.3	656.2	699.2	742.0
Declared Power Input D_C		kW	88.6	94.2	100.4	107.2
Declared $EER_{DC,C}$			6.92	6.97	6.96	6.92
Declared Refrigerant Capacity P_D	1,3,5	kW	565.9	605.6	645.2	684.7
Declared Power Input D_D		kW	53.0	57.1	63.5	75.5
Declared $EER_{DC,D}$			10.68	10.60	10.17	9.07
SSCEE	2,3,5	%	200.8	210.4	214.1	225.5
SSCEE Tier			Tier 2 (2021)	Tier 2 (2021)	Tier 2 (2021)	Tier 2 (2021)
Rated Cooling Capacity $P_{rated,c}$	2,4,5	kW	710.0	760.0	810.0	860.0
Declared Cooling Capacity 35°C Pdc	2,3,5	kW	707.9	757.6	807.2	856.7
Declared EER_d 35°C			3.22	3.27	3.28	3.21
Declared Cooling Capacity 30°C Pdc	2,3,5	kW	521.1	557.6	594.0	630.4
Declared EER_d 30°C			4.29	4.41	4.51	4.58
Declared Cooling Capacity 25°C Pdc	2,3,5	kW	334.2	357.6	380.8	404.1
Declared EER_d 25°C			6.29	6.34	6.34	6.28
Declared Cooling Capacity 20°C Pdc	2,3,5	kW	147.4	157.6	167.7	177.8
Declared EER_d 20°C			5.53	6.33	6.63	8.25
Sound Power Level		dB(A)	90	90	90	90
Air Volume		m³/h	289276	330601	371926	413252
Off mode P_{OFF}		kW	0.301	0.301	0.301	0.301
Thermostat-off mode P_{TO}		kW	2.080	2.443	2.845	3.287
Standby Mode P_{SB}		kW	0.463	0.473	0.483	0.473
Crankcase heater mode P_{CK}		kW	0.000	0.000	0.000	0.000

(1) Nominal conditions as stated in EU 2016/2281 Table 22.
(2) Nominal conditions as stated in EU 2016/2281 Table 21
(3) Performance data (Nett) is supplied in accordance with EN14511-1:2013.
(4) Performance data (Gross) is supplied excluding absorbed pump power as per EN14511-1:2013.
(5) All performance data based upon standard waterside configuration.

Technical Data

TCC22X08S-14, TCC22X10S-14, TCC22X12S-14, TCC22X14S-14

Ecodesign

	Notes:		TCC22X08S-14	TCC22X10S-14	TCC22X12S-14	TCC22X14S-14
SEPR	1,3,5		7.8	8.1	8.3	8.4
SEPR Tier			Tier 2 (2021)	Tier 2 (2021)	Tier 2 (2021)	Tier 2 (2021)
Annual Electricity Consumption		kWh/a	407145.3	418217.2	434896.0	459937.6
Rated Refrigerant Capacity P_A	1,3,5	kW	429.0	458.8	488.6	518.4
Rated Power Input D_A		kW	130.1	129.7	132.6	138.4
Rated $EER_{DC,A}$			3.30	3.54	3.69	3.75
Declared Refrigerant Capacity P_B	1,3,5	kW	400.3	428.2	456.0	483.8
Declared Power Input D_B		kW	84.4	85.6	88.6	92.5
Declared $EER_{DC,B}$			4.74	5.00	5.14	5.23
Declared Refrigerant Capacity P_C	1,3,5	kW	371.7	397.5	423.3	449.1
Declared Power Input D_C		kW	53.5	54.8	57.0	59.9
Declared $EER_{DC,C}$			6.95	7.26	7.42	7.50
Declared Refrigerant Capacity P_D	1,3,5	kW	343.0	366.8	390.6	414.4
Declared Power Input D_D		kW	30.5	31.6	32.9	35.3
Declared $EER_{DC,D}$			11.26	11.59	11.86	11.72
SSCEE	2,3,5	%	199.3	206.1	224.1	227.4
SSCEE Tier			Tier 2 (2021)	Tier 2 (2021)	Tier 2 (2021)	Tier 2 (2021)
Rated Cooling Capacity $P_{rated,c}$	2,4,5	kW	430.0	460.0	490.0	520.0
Declared Cooling Capacity 35°C Pdc	2,3,5	kW	429.0	458.8	488.6	518.4
Declared EER_d 35°C			3.30	3.54	3.69	3.75
Declared Cooling Capacity 30°C Pdc	2,3,5	kW	315.8	337.8	359.7	381.6
Declared EER_d 30°C			4.36	4.54	4.71	4.83
Declared Cooling Capacity 25°C Pdc	2,3,5	kW	202.7	216.7	230.7	244.8
Declared EER_d 25°C			6.06	6.16	6.25	6.30
Declared Cooling Capacity 20°C Pdc	2,3,5	kW	83.8	80.4	101.8	107.9
Declared EER_d 20°C			5.57	5.81	7.43	7.54
Sound Power Level		dB(A)	89	90	90	90
Air Volume		m³/h	165301	206626	247951	289276
Off mode P_{OFF}		kW	0.301	0.301	0.301	0.301
Thermostat-off mode P_{TO}		kW	1.007	1.174	1.357	1.555
Standby Mode P_{SB}		kW	0.483	0.493	0.503	0.513
Crankcase heater mode P_{CK}		kW	0.000	0.000	0.000	0.000

(1) Nominal conditions as stated in EU 2016/2281 Table 22.
(2) Nominal conditions as stated in EU 2016/2281 Table 21
(3) Performance data (Nett) is supplied in accordance with EN14511-1:2013.
(4) Performance data (Gross) is supplied excluding absorbed pump power as per EN14511-1:2013.
(5) All performance data based upon standard waterside configuration.

Technical Data

TCC22X10L-15, TCC22X12L-15, TCC22X14L-15

Ecodesign

	Notes:		TCC22X10L-15	TCC22X12L-15	TCC22X14L-15
SEPR	1,3,5		7.6	7.7	7.7
SEPR Tier			Tier 2 (2021)	Tier 2 (2021)	Tier 2 (2021)
Annual Electricity Consumption		kWh/a	506080.0	608547.1	681269.3
Rated Refrigerant Capacity P_A	1,3,5	kW	519.0	628.4	707.9
Rated Power Input D_A		kW	170.6	197.6	218.1
Rated $EER_{DC,A}$			3.04	3.18	3.25
Declared Refrigerant Capacity P_B	1,3,5	kW	484.3	586.4	660.6
Declared Power Input D_B		kW	108.2	125.9	138.6
Declared $EER_{DC,B}$			4.48	4.66	4.77
Declared Refrigerant Capacity P_C	1,3,5	kW	449.7	544.4	613.3
Declared Power Input D_C		kW	65.4	78.7	88.0
Declared $EER_{DC,C}$			6.88	6.92	6.97
Declared Refrigerant Capacity P_D	1,3,5	kW	415.0	502.4	565.9
Declared Power Input D_D		kW	37.8	46.3	52.3
Declared $EER_{DC,D}$			10.97	10.85	10.81
SSCEE	2,3,5	%	190.3	193.4	200.0
SSCEE Tier			Tier 2 (2021)	Tier 2 (2021)	Tier 2 (2021)
Rated Cooling Capacity $P_{rated,c}$	2,4,5	kW	520.0	630.0	710.0
Declared Cooling Capacity 35°C Pdc	2,3,5	kW	519.0	628.4	707.9
Declared EER_d 35°C			3.04	3.18	3.25
Declared Cooling Capacity 30°C Pdc	2,3,5	kW	382.2	462.6	521.1
Declared EER_d 30°C			3.95	4.12	4.29
Declared Cooling Capacity 25°C Pdc	2,3,5	kW	245.3	296.9	334.2
Declared EER_d 25°C			4.90	5.22	5.53
Declared Cooling Capacity 20°C Pdc	2,3,5	kW	108.7	131.1	147.4
Declared EER_d 20°C			7.03	6.46	6.49
Sound Power Level		dB(A)	90	90	90
Air Volume		m³/h	206626	247951	289276
Off mode P_{OFF}		kW	0.322	0.322	0.322
Thermostat-off mode P_{TO}		kW	1.003	1.564	2.067
Standby Mode P_{SB}		kW	0.484	0.494	0.504
Crankcase heater mode P_{CK}		kW	0.000	0.000	0.000

(1) Nominal conditions as stated in EU 2016/2281 Table 22.
(2) Nominal conditions as stated in EU 2016/2281 Table 21
(3) Performance data (Nett) is supplied in accordance with EN14511-1:2013.
(4) Performance data (Gross) is supplied excluding absorbed pump power as per EN14511-1:2013.
(5) All performance data based upon standard waterside configuration.

Technical Data

TCC22X16L-16, TCC22X18L-16, TCC22X20L-16

Ecodesign

	Notes:		TCC22X16L-16	TCC22X18L-16	TCC22X20L-16
SEPR	1,3,5		7.8	7.7	7.3
SEPR Tier			Tier 2 (2021)	Tier 2 (2021)	Tier 2 (2021)
Annual Electricity Consumption		kWh/a	722554.0	780427.4	869174.9
Rated Refrigerant Capacity P_A	1,3,5	kW	757.8	807.4	857.0
Rated Power Input D_A		kW	228.4	241.6	261.3
Rated $EER_{DC,A}$			3.32	3.34	3.28
Declared Refrigerant Capacity P_B	1,3,5	kW	707.1	753.4	799.7
Declared Power Input D_B		kW	145.3	153.7	164.7
Declared $EER_{DC,B}$			4.87	4.90	4.86
Declared Refrigerant Capacity P_C	1,3,5	kW	656.5	699.4	742.4
Declared Power Input D_C		kW	93.1	99.0	105.7
Declared $EER_{DC,C}$			7.05	7.06	7.02
Declared Refrigerant Capacity P_D	1,3,5	kW	605.8	645.4	685.0
Declared Power Input D_D		kW	56.1	62.2	73.9
Declared $EER_{DC,D}$			10.80	10.37	9.27
SSCEE	2,3,5	%	191.2	212.7	205.9
SSCEE Tier			Tier 2 (2021)	Tier 2 (2021)	Tier 2 (2021)
Rated Cooling Capacity $P_{rated,c}$	2,4,5	kW	760.0	810.0	860.0
Declared Cooling Capacity 35°C Pdc	2,3,5	kW	757.8	807.4	857.0
Declared EER_d 35°C			3.32	3.34	3.28
Declared Cooling Capacity 30°C Pdc	2,3,5	kW	557.8	594.3	630.7
Declared EER_d 30°C			4.44	4.55	4.63
Declared Cooling Capacity 25°C Pdc	2,3,5	kW	357.8	381.1	404.4
Declared EER_d 25°C			5.67	5.82	5.91
Declared Cooling Capacity 20°C Pdc	2,3,5	kW	157.8	168.0	178.1
Declared EER_d 20°C			5.12	7.14	6.16
Sound Power Level		dB(A)	90	90	90
Air Volume		m³/h	330601	371926	413252
Off mode P_{OFF}		kW	0.322	0.322	0.322
Thermostat-off mode P_{TO}		kW	2.211	2.569	2.961
Standby Mode P_{SB}		kW	0.494	0.504	0.514
Crankcase heater mode P_{CK}		kW	0.000	0.000	0.000

(1) Nominal conditions as stated in EU 2016/2281 Table 22.
(2) Nominal conditions as stated in EU 2016/2281 Table 21
(3) Performance data (Nett) is supplied in accordance with EN14511-1:2013.
(4) Performance data (Gross) is supplied excluding absorbed pump power as per EN14511-1:2013.
(5) All performance data based upon standard waterside configuration.

Technical Data

TCC23X12S-17, TCC23X14S-17, TCC23X16S-17, TCC23X18S-17

Ecodesign

	Notes:		TCC23X12S-17	TCC23X14S-17	TCC23X16S-17	TCC23X18S-17
SEPR	1,3,5		7.5	8.1	8.2	8.2
SEPR Tier			Tier 2 (2021)	Tier 2 (2021)	Tier 2 (2021)	Tier 2 (2021)
Annual Electricity Consumption		kWh/a	581145.3	582481.1	624736.7	668654.1
Rated Refrigerant Capacity P_A	1,3,5	kW	588.9	638.6	688.4	738.1
Rated Power Input D_A		kW	177.4	184.3	193.5	203.7
Rated $EER_{DC,A}$			3.32	3.46	3.56	3.62
Declared Refrigerant Capacity P_B	1,3,5	kW	549.6	596.0	642.4	688.8
Declared Power Input D_B		kW	114.9	120.9	128.1	136.0
Declared $EER_{DC,B}$			4.78	4.93	5.02	5.06
Declared Refrigerant Capacity P_C	1,3,5	kW	511.1	553.3	596.4	639.4
Declared Power Input D_C		kW	72.3	76.7	81.8	87.6
Declared $EER_{DC,C}$			7.06	7.21	7.29	7.30
Declared Refrigerant Capacity P_D	1,3,5	kW	471.7	510.6	550.4	590.1
Declared Power Input D_D		kW	47.6	43.5	47.3	50.8
Declared $EER_{DC,D}$			9.91	11.75	11.64	11.62
SSCEE	2,3,5	%	225.3	231.3	231.0	235.0
SSCEE Tier			Tier 2 (2021)	Tier 2 (2021)	Tier 2 (2021)	Tier 2 (2021)
Rated Cooling Capacity $P_{rated,c}$	2,4,5	kW	590.0	640.0	690.0	740.0
Declared Cooling Capacity 35°C Pdc	2,3,5	kW	588.8	638.6	688.4	738.1
Declared EER_d 35°C			3.32	3.46	3.56	3.62
Declared Cooling Capacity 30°C Pdc	2,3,5	kW	433.6	470.2	506.8	543.4
Declared EER_d 30°C			4.47	4.63	4.56	4.66
Declared Cooling Capacity 25°C Pdc	2,3,5	kW	278.4	301.8	325.2	348.6
Declared EER_d 25°C			6.04	6.25	6.22	6.34
Declared Cooling Capacity 20°C Pdc	2,3,5	kW	123.1	133.4	143.6	153.9
Declared EER_d 20°C			8.54	8.53	8.68	8.79
Sound Power Level		dB(A)	91	91	91	91
Air Volume		m³/h	247951	289276	330601	371926
Off mode P_{OFF}		kW	0.322	0.322	0.375	0.375
Thermostat-off mode P_{TO}		kW	1.119	1.353	1.614	1.903
Standby Mode P_{SB}		kW	0.524	0.534	0.596	0.606
Crankcase heater mode P_{CK}		kW	0.000	0.000	0.000	0.000

(1) Nominal conditions as stated in EU 2016/2281 Table 22.
(2) Nominal conditions as stated in EU 2016/2281 Table 21
(3) Performance data (Nett) is supplied in accordance with EN14511-1:2013.
(4) Performance data (Gross) is supplied excluding absorbed pump power as per EN14511-1:2013.
(5) All performance data based upon standard waterside configuration.

Technical Data

TCC23X16L-19, TCC23X18L-19

Ecodesign

	Notes:		TCC23X16L-19	TCC23X18L-19
SEPR	1,3,5		7.6	7.8
SEPR Tier			Tier 2 (2021)	Tier 2 (2021)
Annual Electricity Consumption		kWh/a	757181.1	798376.8
Rated Refrigerant Capacity P_A	1,3,5	kW	778.6	838.3
Rated Power Input D_A		kW	253.5	262.5
Rated $EER_{DC,A}$			3.07	3.19
Declared Refrigerant Capacity P_B	1,3,5	kW	726.6	782.3
Declared Power Input D_B		kW	161.3	168.1
Declared $EER_{DC,B}$			4.51	4.65
Declared Refrigerant Capacity P_C	1,3,5	kW	674.6	726.3
Declared Power Input D_C		kW	97.8	103.6
Declared $EER_{DC,C}$			6.90	7.01
Declared Refrigerant Capacity P_D	1,3,5	kW	622.6	670.3
Declared Power Input D_D		kW	56.8	60.0
Declared $EER_{DC,D}$			10.97	11.17
SSCEE	2,3,5	%	213.6	217.6
SSCEE Tier			Tier 2 (2021)	Tier 2 (2021)
Rated Cooling Capacity $P_{rated,c}$	2,4,5	kW	780.0	840.0
Declared Cooling Capacity 35°C Pdc	2,3,5	kW	778.6	838.3
Declared EER_d 35°C			3.07	3.19
Declared Cooling Capacity 30°C Pdc	2,3,5	kW	573.3	617.2
Declared EER_d 30°C			4.21	4.41
Declared Cooling Capacity 25°C Pdc	2,3,5	kW	368.0	396.2
Declared EER_d 25°C			5.80	5.78
Declared Cooling Capacity 20°C Pdc	2,3,5	kW	162.8	175.1
Declared EER_d 20°C			8.02	8.13
Sound Power Level		dB(A)	92	92
Air Volume		m³/h	330601	371926
Off mode P_{OFF}		kW	0.375	0.375
Thermostat-off mode P_{TO}		kW	1.446	1.722
Standby Mode P_{SB}		kW	0.616	0.626
Crankcase heater mode P_{CK}		kW	0.000	0.000

(1) Nominal conditions as stated in EU 2016/2281 Table 22.
(2) Nominal conditions as stated in EU 2016/2281 Table 21
(3) Performance data (Nett) is supplied in accordance with EN14511-1:2013.
(4) Performance data (Gross) is supplied excluding absorbed pump power as per EN14511-1:2013.
(5) All performance data based upon standard waterside configuration.

Technical Data

TCC23X20L-20, TCC23X22L-20, TCC23X24L-20

Ecodesign

	Notes:		TCC23X20L-20	TCC23X22L-20	TCC23X24L-20
SEPR	1,3,5		7.9	7.9	8.0
SEPR Tier			Tier 2 (2021)	Tier 2 (2021)	Tier 2 (2021)
Annual Electricity Consumption		kWh/a	845034.5	894784.7	946611.3
Rated Refrigerant Capacity P_A	1,3,5	kW	898.1	957.8	1017.5
Rated Power Input D_A		kW	273.5	284.5	299.5
Rated $EER_{DC,A}$			3.28	3.37	3.40
Declared Refrigerant Capacity P_B	1,3,5	kW	838.1	893.8	949.5
Declared Power Input D_B		kW	176.1	184.1	193.6
Declared $EER_{DC,B}$			4.76	4.86	4.91
Declared Refrigerant Capacity P_C	1,3,5	kW	778.1	829.8	881.5
Declared Power Input D_C		kW	109.4	115.6	122.7
Declared $EER_{DC,C}$			7.11	7.18	7.18
Declared Refrigerant Capacity P_D	1,3,5	kW	718.1	765.8	813.5
Declared Power Input D_D		kW	64.0	68.5	72.4
Declared $EER_{DC,D}$			11.21	11.18	11.23
SSCEE	2,3,5	%	222.1	221.7	225.9
SSCEE Tier			Tier 2 (2021)	Tier 2 (2021)	Tier 2 (2021)
Rated Cooling Capacity $P_{rated,c}$	2,4,5	kW	900.0	960.0	1020.0
Declared Cooling Capacity 35°C Pdc	2,3,5	kW	898.1	957.8	1017.5
Declared EER_d 35°C			3.28	3.37	3.40
Declared Cooling Capacity 30°C Pdc	2,3,5	kW	661.3	705.2	749.0
Declared EER_d 30°C			4.52	4.49	4.55
Declared Cooling Capacity 25°C Pdc	2,3,5	kW	424.4	452.5	480.6
Declared EER_d 25°C			5.91	5.95	6.06
Declared Cooling Capacity 20°C Pdc	2,3,5	kW	187.6	199.9	212.2
Declared EER_d 20°C			8.21	8.06	8.33
Sound Power Level		dB(A)	92	92	92
Air Volume		m³/h	413252	454577	495902
Off mode P_{OFF}		kW	0.375	0.375	0.375
Thermostat-off mode P_{TO}		kW	1.879	2.191	2.532
Standby Mode P_{SB}		kW	0.626	0.636	0.646
Crankcase heater mode P_{CK}		kW	0.000	0.000	0.000

(1) Nominal conditions as stated in EU 2016/2281 Table 22.
(2) Nominal conditions as stated in EU 2016/2281 Table 21
(3) Performance data (Nett) is supplied in accordance with EN14511-1:2013.
(4) Performance data (Gross) is supplied excluding absorbed pump power as per EN14511-1:2013.
(5) All performance data based upon standard waterside configuration.

Technical Data

TCC24X16S-18 , TCC24X18S-18, TCC24X20S-18

Ecodesign

	Notes:		TCC24X16S-18	TCC24X18S-18	TCC24X20S-18
SEPR	1,3,5		7.8	8.0	8.2
SEPR Tier			Tier 2 (2021)	Tier 2 (2021)	Tier 2 (2021)
Annual Electricity Consumption		kWh/a	755731.4	765075.1	778549.6
Rated Refrigerant Capacity P_A	1,3,5	kW	798.2	828.0	857.9
Rated Power Input D_A		kW	245.3	242.9	244.9
Rated $EER_{DC,A}$			3.25	3.41	3.50
Declared Refrigerant Capacity P_B	1,3,5	kW	744.9	772.7	800.5
Declared Power Input D_B		kW	157.9	159.1	161.4
Declared $EER_{DC,B}$			4.72	4.86	4.96
Declared Refrigerant Capacity P_C	1,3,5	kW	691.5	717.4	743.2
Declared Power Input D_C		kW	99.2	100.6	102.5
Declared $EER_{DC,C}$			6.97	7.13	7.25
Declared Refrigerant Capacity P_D	1,3,5	kW	638.2	662.0	685.9
Declared Power Input D_D		kW	56.3	57.1	58.1
Declared $EER_{DC,D}$			11.33	11.60	11.80
SSCEE	2,3,5	%	225.4	228.7	230.8
SSCEE Tier			Tier 2 (2021)	Tier 2 (2021)	Tier 2 (2021)
Rated Cooling Capacity $P_{rated,c}$	2,4,5	kW	800.0	830.0	860.0
Declared Cooling Capacity 35°C Pdc	2,3,5	kW	798.2	828.0	857.9
Declared EER_d 35°C			3.25	3.41	3.50
Declared Cooling Capacity 30°C Pdc	2,3,5	kW	587.7	609.6	631.6
Declared EER_d 30°C			4.55	4.57	4.57
Declared Cooling Capacity 25°C Pdc	2,3,5	kW	377.2	391.2	405.2
Declared EER_d 25°C			6.29	6.40	6.48
Declared Cooling Capacity 20°C Pdc	2,3,5	kW	166.6	172.8	178.9
Declared EER_d 20°C			8.01	8.11	8.19
Sound Power Level		dB(A)	92	92	93
Air Volume		m³/h	330601	371926	413252
Off mode P_{OFF}		kW	0.375	0.427	0.427
Thermostat-off mode P_{TO}		kW	1.793	1.954	2.124
Standby Mode P_{SB}		kW	0.656	0.719	0.729
Crankcase heater mode P_{CK}		kW	0.000	0.000	0.000

(1) Nominal conditions as stated in EU 2016/2281 Table 22.
(2) Nominal conditions as stated in EU 2016/2281 Table 21
(3) Performance data (Nett) is supplied in accordance with EN14511-1:2013.
(4) Performance data (Gross) is supplied excluding absorbed pump power as per EN14511-1:2013.
(5) All performance data based upon standard waterside configuration.

Technical Data

TCC24X22S-18, TCC24X24S-18

Ecodesign

	Notes:		TCC24X22S-18	TCC24X24S-18
SEPR	1,3,5		8.2	8.2
SEPR Tier			Tier 2 (2021)	Tier 2 (2021)
Annual Electricity Consumption		kWh/a	825216.7	871424.7
Rated Refrigerant Capacity P_A	1,3,5	kW	907.6	957.2
Rated Power Input D_A		kW	255.0	266.5
Rated $EER_{DC,A}$			3.56	3.59
Declared Refrigerant Capacity P_B	1,3,5	kW	846.9	893.2
Declared Power Input D_B		kW	169.2	177.3
Declared $EER_{DC,B}$			5.00	5.04
Declared Refrigerant Capacity P_C	1,3,5	kW	786.2	829.2
Declared Power Input D_C		kW	108.0	113.8
Declared $EER_{DC,C}$			7.28	7.28
Declared Refrigerant Capacity P_D	1,3,5	kW	725.6	765.2
Declared Power Input D_D		kW	62.4	66.3
Declared $EER_{DC,D}$			11.62	11.54
SSCEE	2,3,5	%	242.6	233.9
SSCEE Tier			Tier 2 (2021)	Tier 2 (2021)
Rated Cooling Capacity $P_{rated,c}$	2,4,5	kW	910.0	960.0
Declared Cooling Capacity 35°C Pdc	2,3,5	kW	907.6	957.2
Declared EER_d 35°C			3.56	3.59
Declared Cooling Capacity 30°C Pdc	2,3,5	kW	668.1	704.6
Declared EER_d 30°C			4.62	4.65
Declared Cooling Capacity 25°C Pdc	2,3,5	kW	428.6	452.0
Declared EER_d 25°C			6.50	6.52
Declared Cooling Capacity 20°C Pdc	2,3,5	kW	189.2	199.4
Declared EER_d 20°C			9.86	8.38
Sound Power Level		dB(A)	93	93
Air Volume		m³/h	454577	495902
Off mode P_{OFF}		kW	0.427	0.427
Thermostat-off mode P_{TO}		kW	2.426	2.752
Standby Mode P_{SB}		kW	0.739	0.749
Crankcase heater mode P_{CK}		kW	0.000	0.000

(1) Nominal conditions as stated in EU 2016/2281 Table 22.
(2) Nominal conditions as stated in EU 2016/2281 Table 21
(3) Performance data (Nett) is supplied in accordance with EN14511-1:2013.
(4) Performance data (Gross) is supplied excluding absorbed pump power as per EN14511-1:2013.
(5) All performance data based upon standard waterside configuration.

Technical Data

TCC24X20L-21, TCC24X22L-21, TCC24X24L-21

Ecodesign

	Notes:		TCC24X20L-21	TCC24X22L-21	TCC24X24L-21
SEPR	1,3,5		7.5	7.7	7.8
SEPR Tier			Tier 2 (2021)	Tier 2 (2021)	Tier 2 (2021)
Annual Electricity Consumption		kWh/a	988401.1	1007208.5	1029159.0
Rated Refrigerant Capacity P_A	1,3,5	kW	998.2	1038.0	1077.8
Rated Power Input D_A		kW	338.1	336.8	340.2
Rated $EER_{DC,A}$			2.95	3.08	3.17
Declared Refrigerant Capacity P_B	1,3,5	kW	931.5	968.7	1005.8
Declared Power Input D_B		kW	208.2	212.4	216.9
Declared $EER_{DC,B}$			4.47	4.56	4.64
Declared Refrigerant Capacity P_C	1,3,5	kW	864.9	899.4	933.8
Declared Power Input D_C		kW	128.6	130.4	133.2
Declared $EER_{DC,C}$			6.73	6.90	7.01
Declared Refrigerant Capacity P_D	1,3,5	kW	798.2	830.0	861.8
Declared Power Input D_D		kW	73.9	75.8	77.5
Declared $EER_{DC,D}$			10.80	10.95	11.12
SSCEE	2,3,5	%	210.7	223.5	226.9
SSCEE Tier			Tier 2 (2021)	Tier 2 (2021)	Tier 2 (2021)
Rated Cooling Capacity $P_{rated,c}$	2,4,5	kW	1000.0	1040.0	1080.0
Declared Cooling Capacity 35°C Pdc	2,3,5	kW	998.2	1038.0	1077.8
Declared EER_d 35°C			2.95	3.08	3.17
Declared Cooling Capacity 30°C Pdc	2,3,5	kW	735.0	764.3	793.6
Declared EER_d 30°C			4.60	4.63	4.65
Declared Cooling Capacity 25°C Pdc	2,3,5	kW	471.9	490.7	509.4
Declared EER_d 25°C			6.05	6.16	6.27
Declared Cooling Capacity 20°C Pdc	2,3,5	kW	208.7	217.0	225.2
Declared EER_d 20°C			6.60	7.89	8.06
Sound Power Level		dB(A)	93	93	93
Air Volume		m³/h	413252	454577	495902
Off mode P_{OFF}		kW	0.427	0.427	0.427
Thermostat-off mode P_{TO}		kW	1.807	1.978	2.159
Standby Mode P_{SB}		kW	0.759	0.749	0.759
Crankcase heater mode P_{CK}		kW	0.000	0.000	0.000

(1) Nominal conditions as stated in EU 2016/2281 Table 22.
(2) Nominal conditions as stated in EU 2016/2281 Table 21
(3) Performance data (Nett) is supplied in accordance with EN14511-1:2013.
(4) Performance data (Gross) is supplied excluding absorbed pump power as per EN14511-1:2013.
(5) All performance data based upon standard waterside configuration.

Technical Data - TCF R

TCF11R06S-07, TCF11R08S-07, TCF11R06L-11

Ecodesign

	Notes:		TCF11R06S-07	TCF11R08S-07	TCF11R06L-11
SEPR	1,3,5		8.0	8.2	6.9
SEPR Tier			Tier 2 (2021)	Tier 2 (2021)	Tier 2 (2021)
Annual Electricity Consumption		kWh/a	254702.0	270866.7	416477.8
Rated Refrigerant Capacity P_A	1,3,5	kW	272.9	297.6	386.7
Rated Power Input D_A		kW	86.3	93.0	152.5
Rated $EER_{DC,A}$			3.16	3.20	2.54
Declared Refrigerant Capacity P_B	1,3,5	kW	254.6	277.6	360.7
Declared Power Input D_B		kW	57.8	61.8	96.8
Declared $EER_{DC,B}$			4.41	4.49	3.73
Declared Refrigerant Capacity P_C	1,3,5	kW	236.3	257.6	334.7
Declared Power Input D_C		kW	38.3	41.0	62.6
Declared $EER_{DC,C}$			6.17	6.28	5.35
Declared Refrigerant Capacity P_D	1,3,5	kW	217.9	237.6	308.7
Declared Power Input D_D		kW	15.1	15.8	24.0
Declared $EER_{DC,D}$			14.47	15.06	12.86
SSCEE	2,3,5	%	181.6	187.7	160.3
SSCEE Tier			Tier 2 (2021)	Tier 2 (2021)	Tier 1 (2018)
Rated Cooling Capacity $P_{rated,c}$	2,4,5	kW	275.0	300.0	390.0
Declared Cooling Capacity 35°C Pdc	2,3,5	kW	272.9	297.6	386.7
Declared EER_d 35°C			3.16	3.20	2.54
Declared Cooling Capacity 30°C Pdc	2,3,5	kW	200.6	218.7	284.0
Declared EER_d 30°C			4.17	4.36	3.54
Declared Cooling Capacity 25°C Pdc	2,3,5	kW	128.2	139.7	181.4
Declared EER_d 25°C			5.45	5.62	4.52
Declared Cooling Capacity 20°C Pdc	2,3,5	kW	78.8	75.1	101.0
Declared EER_d 20°C			5.36	5.58	5.48
Sound Power Level		dB(A)	88	87	90
Air Volume		m³/h	123975	165301	123975
Off mode P_{OFF}		kW	0.249	0.249	0.249
Thermostat-off mode P_{TO}		kW	2.075	2.365	3.337
Standby Mode P_{SB}		kW	0.330	0.340	0.350
Crankcase heater mode P_{CK}		kW	0.000	0.000	0.000

(1) Nominal conditions as stated in EU 2016/2281 Table 22.
(2) Nominal conditions as stated in EU 2016/2281 Table 21
(3) Performance data (Nett) is supplied in accordance with EN14511-1:2013.
(4) Performance data (Gross) is supplied excluding absorbed pump power as per EN14511-1:2013.
(5) All performance data based upon standard waterside configuration.

Technical Data

TCF11R08L-08, TCF11R10L-10, TCF12R08S-09

Ecodesign

	Notes:		TCF11R08L-08	TCF11R10L-10	TCF12R08S-09
SEPR	1,3,5		7.3	7.7	6.8
SEPR Tier			Tier 2 (2021)	Tier 2 (2021)	Tier 2 (2021)
Annual Electricity Consumption		kWh/a	430285.9	413232.5	513943.2
Rated Refrigerant Capacity P_A	1,3,5	kW	422.3	427.1	466.7
Rated Power Input D_A		kW	163.5	152.2	150.7
Rated $EER_{DC,A}$			2.58	2.81	3.10
Declared Refrigerant Capacity P_B	1,3,5	kW	394.0	398.4	435.4
Declared Power Input D_B		kW	102.0	95.9	101.5
Declared $EER_{DC,B}$			3.86	4.16	4.29
Declared Refrigerant Capacity P_C	1,3,5	kW	365.6	369.7	404.1
Declared Power Input D_C		kW	65.3	61.5	66.7
Declared $EER_{DC,C}$			5.60	6.01	6.05
Declared Refrigerant Capacity P_D	1,3,5	kW	337.3	341.1	372.7
Declared Power Input D_D		kW	24.2	24.3	39.6
Declared $EER_{DC,D}$			13.92	14.04	9.42
SSCEE	2,3,5	%	174.8	181.8	178.5
SSCEE Tier			Tier 1 (2018)	Tier 2 (2021)	Tier 1 (2018)
Rated Cooling Capacity $P_{rated,c}$	2,4,5	kW	425.0	430.0	470.0
Declared Cooling Capacity 35°C Pdc	2,3,5	kW	422.3	427.1	466.7
Declared EER_d 35°C			2.58	2.81	3.10
Declared Cooling Capacity 30°C Pdc	2,3,5	kW	310.5	313.9	343.0
Declared EER_d 30°C			3.78	4.02	3.96
Declared Cooling Capacity 25°C Pdc	2,3,5	kW	198.6	200.7	219.4
Declared EER_d 25°C			4.93	5.14	5.37
Declared Cooling Capacity 20°C Pdc	2,3,5	kW	97.7	95.0	74.2
Declared EER_d 20°C			6.05	6.12	5.26
Sound Power Level		dB(A)	90	89	91
Air Volume		m³/h	165301	206626	165301
Off mode P_{OFF}		kW	0.249	0.249	0.249
Thermostat-off mode P_{TO}		kW	2.700	2.940	3.281
Standby Mode P_{SB}		kW	0.340	0.350	0.360
Crankcase heater mode P_{CK}		kW	0.000	0.000	0.000

(1) Nominal conditions as stated in EU 2016/2281 Table 22.
(2) Nominal conditions as stated in EU 2016/2281 Table 21
(3) Performance data (Nett) is supplied in accordance with EN14511-1:2013.
(4) Performance data (Gross) is supplied excluding absorbed pump power as per EN14511-1:2013.
(5) All performance data based upon standard waterside configuration.

Technical Data

TCF12R10S-05, TCF12R12S-05, TCF12R14S-05

Ecodesign

	Notes:		TCF12R10S-05	TCF12R12S-05	TCF12R14S-05
SEPR	1,3,5		8.6	8.8	8.7
SEPR Tier			Tier 2 (2021)	Tier 2 (2021)	Tier 2 (2021)
Annual Electricity Consumption		kWh/a	431600.1	448792.7	475351.3
Rated Refrigerant Capacity P_A	1,3,5	kW	496.3	526.0	555.6
Rated Power Input D_A		kW	149.7	155.1	161.9
Rated $EER_{DC,A}$			3.32	3.39	3.43
Declared Refrigerant Capacity P_B	1,3,5	kW	463.0	490.7	518.2
Declared Power Input D_B		kW	101.2	104.1	108.8
Declared $EER_{DC,B}$			4.58	4.71	4.76
Declared Refrigerant Capacity P_C	1,3,5	kW	429.6	455.3	480.9
Declared Power Input D_C		kW	66.8	69.1	72.7
Declared $EER_{DC,C}$			6.43	6.59	6.61
Declared Refrigerant Capacity P_D	1,3,5	kW	396.3	420.0	443.6
Declared Power Input D_D		kW	24.0	25.3	27.3
Declared $EER_{DC,D}$			16.51	16.61	16.28
SSCEE	2,3,5	%	194.7	199.2	201.1
SSCEE Tier			Tier 2 (2021)	Tier 2 (2021)	Tier 2 (2021)
Rated Cooling Capacity $P_{rated,c}$	2,4,5	kW	500.0	530.0	560.0
Declared Cooling Capacity 35°C Pdc	2,3,5	kW	496.3	526.0	555.6
Declared EER_d 35°C			3.32	3.39	3.43
Declared Cooling Capacity 30°C Pdc	2,3,5	kW	364.7	386.5	408.2
Declared EER_d 30°C			4.22	4.37	4.47
Declared Cooling Capacity 25°C Pdc	2,3,5	kW	233.2	247.0	260.8
Declared EER_d 25°C			5.46	5.63	5.72
Declared Cooling Capacity 20°C Pdc	2,3,5	kW	101.6	107.6	113.5
Declared EER_d 20°C			6.67	6.71	6.68
Sound Power Level		dB(A)	91	90	90
Air Volume		m³/h	206626	247951	289276
Off mode P_{OFF}		kW	0.301	0.301	0.301
Thermostat-off mode P_{TO}		kW	3.688	4.009	4.437
Standby Mode P_{SB}		kW	0.453	0.463	0.473
Crankcase heater mode P_{CK}		kW	0.000	0.000	0.000

(1) Nominal conditions as stated in EU 2016/2281 Table 22.
(2) Nominal conditions as stated in EU 2016/2281 Table 21
(3) Performance data (Nett) is supplied in accordance with EN14511-1:2013.
(4) Performance data (Gross) is supplied excluding absorbed pump power as per EN14511-1:2013.
(5) All performance data based upon standard waterside configuration.

Technical Data

TCF12R12L-12, TCF12R14L-12, TCF12R16L-12

Ecodesign

	Notes:		TCF12R12L-12	TCF12R14L-12	TCF12R16L-12
SEPR	1,3,5		6.3	8.0	8.0
SEPR Tier			Tier 2 (2021)	Tier 2 (2021)	Tier 2 (2021)
Annual Electricity Consumption		kWh/a	790678.0	696523.2	736984.8
Rated Refrigerant Capacity P_A	1,3,5	kW	665.5	744.5	793.8
Rated Power Input D_A		kW	219.1	245.0	259.1
Rated $EER_{DC,A}$			3.04	3.04	3.06
Declared Refrigerant Capacity P_B	1,3,5	kW	620.9	694.5	740.5
Declared Power Input D_B		kW	144.6	160.2	168.9
Declared $EER_{DC,B}$			4.29	4.33	4.38
Declared Refrigerant Capacity P_C	1,3,5	kW	576.2	644.5	687.2
Declared Power Input D_C		kW	93.5	104.1	110.2
Declared $EER_{DC,C}$			6.16	6.19	6.24
Declared Refrigerant Capacity P_D	1,3,5	kW	531.5	594.5	633.8
Declared Power Input D_D		kW	69.9	41.0	43.4
Declared $EER_{DC,D}$			7.60	14.51	14.60
SSCEE	2,3,5	%	173.1	175.6	184.7
SSCEE Tier			Tier 1 (2018)	Tier 1 (2018)	Tier 2 (2021)
Rated Cooling Capacity $P_{rated,c}$	2,4,5	kW	670.0	750.0	800.0
Declared Cooling Capacity 35°C Pdc	2,3,5	kW	665.5	744.5	793.8
Declared EER_d 35°C			3.04	3.04	3.06
Declared Cooling Capacity 30°C Pdc	2,3,5	kW	489.2	547.1	583.3
Declared EER_d 30°C			3.83	3.95	4.08
Declared Cooling Capacity 25°C Pdc	2,3,5	kW	312.9	349.8	372.8
Declared EER_d 25°C			4.60	5.05	5.11
Declared Cooling Capacity 20°C Pdc	2,3,5	kW	136.6	152.4	162.3
Declared EER_d 20°C			5.97	5.43	6.31
Sound Power Level		dB(A)	92	92	92
Air Volume		m³/h	247951	289276	330601
Off mode P_{OFF}		kW	0.301	0.301	0.301
Thermostat-off mode P_{TO}		kW	4.473	5.512	6.159
Standby Mode P_{SB}		kW	0.483	0.463	0.473
Crankcase heater mode P_{CK}		kW	0.000	0.000	0.000

(1) Nominal conditions as stated in EU 2016/2281 Table 22.
(2) Nominal conditions as stated in EU 2016/2281 Table 21
(3) Performance data (Nett) is supplied in accordance with EN14511-1:2013.
(4) Performance data (Gross) is supplied excluding absorbed pump power as per EN14511-1:2013.
(5) All performance data based upon standard waterside configuration.

Technical Data

TCF12R18L-13, TCF12R20L-13

Ecodesign

	Notes:		TCF12R18L-13	TCF12R20L-13
SEPR	1,3,5		7.9	7.9
SEPR Tier			Tier 2 (2021)	Tier 2 (2021)
Annual Electricity Consumption		kWh/a	801640.3	843639.1
Rated Refrigerant Capacity P_A	1,3,5	kW	843.2	892.4
Rated Power Input D_A		kW	284.8	303.8
Rated $EER_{DC,A}$			2.96	2.94
Declared Refrigerant Capacity P_B	1,3,5	kW	786.6	832.4
Declared Power Input D_B		kW	181.8	194.8
Declared $EER_{DC,B}$			4.33	4.27
Declared Refrigerant Capacity P_C	1,3,5	kW	729.9	772.4
Declared Power Input D_C		kW	117.8	126.3
Declared $EER_{DC,C}$			6.19	6.12
Declared Refrigerant Capacity P_D	1,3,5	kW	673.2	712.4
Declared Power Input D_D		kW	48.5	49.2
Declared $EER_{DC,D}$			13.88	14.49
SSCEE	2,3,5	%	185.9	186.4
SSCEE Tier			Tier 2 (2021)	Tier 2 (2021)
Rated Cooling Capacity $P_{rated,c}$	2,4,5	kW	850.0	900.0
Declared Cooling Capacity 35°C Pdc	2,3,5	kW	843.2	892.4
Declared EER_d 35°C			2.96	2.94
Declared Cooling Capacity 30°C Pdc	2,3,5	kW	619.5	655.5
Declared EER_d 30°C			4.14	4.19
Declared Cooling Capacity 25°C Pdc	2,3,5	kW	395.9	418.7
Declared EER_d 25°C			5.18	5.26
Declared Cooling Capacity 20°C Pdc	2,3,5	kW	172.2	181.9
Declared EER_d 20°C			6.35	6.30
Sound Power Level		dB(A)	92	92
Air Volume		m³/h	371926	413252
Off mode P_{OFF}		kW	0.301	0.301
Thermostat-off mode P_{TO}		kW	6.766	7.615
Standby Mode P_{SB}		kW	0.483	0.493
Crankcase heater mode P_{CK}		kW	0.000	0.000

(1) Nominal conditions as stated in EU 2016/2281 Table 22.
(2) Nominal conditions as stated in EU 2016/2281 Table 21
(3) Performance data (Nett) is supplied in accordance with EN14511-1:2013.
(4) Performance data (Gross) is supplied excluding absorbed pump power as per EN14511-1:2013.
(5) All performance data based upon standard waterside configuration.

Technical Data

TCF22R10S-22, TCF22R12S-22, TCF22R14S-22

Ecodesign

	Notes:		TCF22R10S-22	TCF22R12S-22	TCF22R14S-22
SEPR	1,3,5		7.8	8.0	7.9
SEPR Tier			Tier 2 (2021)	Tier 2 (2021)	Tier 2 (2021)
Annual Electricity Consumption		kWh/a	464904.2	491892.0	525464.7
Rated Refrigerant Capacity P_A	1,3,5	kW	486.5	526.0	555.6
Rated Power Input D_A		kW	145.4	154.5	161.1
Rated $EER_{DC,A}$			3.35	3.41	3.45
Declared Refrigerant Capacity P_B	1,3,5	kW	453.9	490.7	518.3
Declared Power Input D_B		kW	98.3	103.9	108.5
Declared $EER_{DC,B}$			4.61	4.72	4.78
Declared Refrigerant Capacity P_C	1,3,5	kW	421.2	455.4	480.9
Declared Power Input D_C		kW	64.6	68.9	72.6
Declared $EER_{DC,C}$			6.52	6.61	6.63
Declared Refrigerant Capacity P_D	1,3,5	kW	388.5	420.0	443.6
Declared Power Input D_D		kW	31.8	33.3	36.7
Declared $EER_{DC,D}$			12.22	12.62	12.09
SSCEE	2,3,5	%	188.7	193.2	184.1
SSCEE Tier			Tier 2 (2021)	Tier 2 (2021)	Tier 2 (2021)
Rated Cooling Capacity $P_{rated,c}$	2,4,5	kW	490.0	530.0	560.0
Declared Cooling Capacity 35°C Pdc	2,3,5	kW	486.5	526.0	555.6
Declared EER_d 35°C			3.35	3.41	3.45
Declared Cooling Capacity 30°C Pdc	2,3,5	kW	357.6	386.6	408.2
Declared EER_d 30°C			4.22	4.36	4.47
Declared Cooling Capacity 25°C Pdc	2,3,5	kW	228.6	247.1	260.9
Declared EER_d 25°C			5.48	5.59	5.68
Declared Cooling Capacity 20°C Pdc	2,3,5	kW	99.7	107.6	113.5
Declared EER_d 20°C			5.86	6.05	4.86
Sound Power Level		dB(A)	91	90	90
Air Volume		m³/h	206626	247951	289276
Off mode P_{OFF}		kW	0.301	0.301	0.322
Thermostat-off mode P_{TO}		kW	3.462	3.963	4.396
Standby Mode P_{SB}		kW	0.503	0.513	0.474
Crankcase heater mode P_{CK}		kW	0.000	0.000	0.000

(1) Nominal conditions as stated in EU 2016/2281 Table 22.
(2) Nominal conditions as stated in EU 2016/2281 Table 21
(3) Performance data (Nett) is supplied in accordance with EN14511-1:2013.
(4) Performance data (Gross) is supplied excluding absorbed pump power as per EN14511-1:2013.
(5) All performance data based upon standard waterside configuration.

Technical Data

TCF22R12L-23, TCF22R14L-23, TCF22R16L-23

Ecodesign

	Notes:		TCF22R12L-23	TCF22R14L-23	TCF22R16L-23
SEPR	1,3,5		7.5	7.3	7.4
SEPR Tier			Tier 2 (2021)	Tier 2 (2021)	Tier 2 (2021)
Annual Electricity Consumption		kWh/a	643257.2	732610.4	771091.0
Rated Refrigerant Capacity P_A	1,3,5	kW	646.0	715.2	759.7
Rated Power Input D_A		kW	207.2	226.0	237.2
Rated $EER_{DC,A}$			3.12	3.16	3.20
Declared Refrigerant Capacity P_B	1,3,5	kW	602.7	667.2	708.7
Declared Power Input D_B		kW	137.4	148.7	155.3
Declared $EER_{DC,B}$			4.39	4.49	4.56
Declared Refrigerant Capacity P_C	1,3,5	kW	559.3	619.2	657.7
Declared Power Input D_C		kW	88.3	96.5	101.0
Declared $EER_{DC,C}$			6.34	6.42	6.51
Declared Refrigerant Capacity P_D	1,3,5	kW	516.0	571.2	606.7
Declared Power Input D_D		kW	44.5	54.7	58.1
Declared $EER_{DC,D}$			11.61	10.45	10.44
SSCEE	2,3,5	%	175.4	178.8	182.5
SSCEE Tier			Tier 1 (2018)	Tier 1 (2018)	Tier 2 (2021)
Rated Cooling Capacity $P_{rated,c}$	2,4,5	kW	650.0	720.0	765.0
Declared Cooling Capacity 35°C Pdc	2,3,5	kW	646.0	715.2	759.7
Declared EER_d 35°C			3.12	3.16	3.20
Declared Cooling Capacity 30°C Pdc	2,3,5	kW	475.0	525.7	558.4
Declared EER_d 30°C			3.87	4.02	4.15
Declared Cooling Capacity 25°C Pdc	2,3,5	kW	303.9	336.3	357.1
Declared EER_d 25°C			4.94	5.06	5.18
Declared Cooling Capacity 20°C Pdc	2,3,5	kW	132.8	146.8	155.8
Declared EER_d 20°C			5.54	5.56	5.65
Sound Power Level		dB(A)	92	92	92
Air Volume		m³/h	247951	289276	330601
Off mode P_{OFF}		kW	0.322	0.322	0.322
Thermostat-off mode P_{TO}		kW	3.992	4.780	5.265
Standby Mode P_{SB}		kW	0.484	0.494	0.504
Crankcase heater mode P_{CK}		kW	0.000	0.000	0.000

(1) Nominal conditions as stated in EU 2016/2281 Table 22.
(2) Nominal conditions as stated in EU 2016/2281 Table 21
(3) Performance data (Nett) is supplied in accordance with EN14511-1:2013.
(4) Performance data (Gross) is supplied excluding absorbed pump power as per EN14511-1:2013.
(5) All performance data based upon standard waterside configuration.

Technical Data

TCF22R18L-23, TCF22R20L-23

Ecodesign

	Notes:		TCF22R18L-23	TCF22R20L-23
SEPR	1,3,5		7.1	6.6
SEPR Tier			Tier 2 (2021)	Tier 2 (2021)
Annual Electricity Consumption		kWh/a	888311.3	1017295.0
Rated Refrigerant Capacity P_A	1,3,5	kW	843.4	892.6
Rated Power Input D_A		kW	272.7	290.1
Rated $EER_{DC,A}$			3.09	3.08
Declared Refrigerant Capacity P_B	1,3,5	kW	786.8	832.6
Declared Power Input D_B		kW	175.8	187.4
Declared $EER_{DC,B}$			4.47	4.44
Declared Refrigerant Capacity P_C	1,3,5	kW	730.1	772.6
Declared Power Input D_C		kW	114.4	122.3
Declared $EER_{DC,C}$			6.38	6.32
Declared Refrigerant Capacity P_D	1,3,5	kW	673.4	712.6
Declared Power Input D_D		kW	68.6	87.7
Declared $EER_{DC,D}$			9.82	8.13
SSCEE	2,3,5	%	182.3	183.8
SSCEE Tier			Tier 2 (2021)	Tier 2 (2021)
Rated Cooling Capacity $P_{rated,c}$	2,4,5	kW	850.0	900.0
Declared Cooling Capacity 35°C Pdc	2,3,5	kW	843.4	892.6
Declared EER_d 35°C			3.09	3.08
Declared Cooling Capacity 30°C Pdc	2,3,5	kW	619.7	655.8
Declared EER_d 30°C			4.23	4.30
Declared Cooling Capacity 25°C Pdc	2,3,5	kW	396.1	419.0
Declared EER_d 25°C			5.25	5.34
Declared Cooling Capacity 20°C Pdc	2,3,5	kW	172.4	182.1
Declared EER_d 20°C			5.57	5.57
Sound Power Level		dB(A)	92	92
Air Volume		m³/h	371926	413252
Off mode P_{OFF}		kW	0.322	0.322
Thermostat-off mode P_{TO}		kW	6.578	7.356
Standby Mode P_{SB}		kW	0.484	0.494
Crankcase heater mode P_{CK}		kW	0.000	0.000

(1) Nominal conditions as stated in EU 2016/2281 Table 22.
(2) Nominal conditions as stated in EU 2016/2281 Table 21
(3) Performance data (Nett) is supplied in accordance with EN14511-1:2013.
(4) Performance data (Gross) is supplied excluding absorbed pump power as per EN14511-1:2013.
(5) All performance data based upon standard waterside configuration.

Technical Data

TCF23R12S-24, TCF23R14S-24, TCF23R16S-25, TCF23R18S-25

Ecodesign

	Notes:		TCF23R12S-24	TCF23R14S-24	TCF23R16S-25	TCF23R18S-25
SEPR	1,3,5		7.0	7.1	7.2	8.4
SEPR Tier			Tier 2 (2021)	Tier 2 (2021)	Tier 2 (2021)	Tier 2 (2021)
Annual Electricity Consumption		kWh/a	663872.7	708392.6	754628.6	684487.2
Rated Refrigerant Capacity P_A	1,3,5	kW	626.2	675.7	725.3	774.7
Rated Power Input D_A		kW	196.5	206.4	216.6	230.2
Rated $EER_{DC,A}$			3.19	3.27	3.35	3.37
Declared Refrigerant Capacity P_B	1,3,5	kW	584.2	630.3	676.6	722.7
Declared Power Input D_B		kW	131.8	138.8	146.1	154.6
Declared $EER_{DC,B}$			4.43	4.54	4.63	4.67
Declared Refrigerant Capacity P_C	1,3,5	kW	542.2	585.0	628.0	670.7
Declared Power Input D_C		kW	85.3	90.2	95.6	102.0
Declared $EER_{DC,C}$			6.36	6.49	6.57	6.58
Declared Refrigerant Capacity P_D	1,3,5	kW	500.2	539.7	579.3	618.7
Declared Power Input D_D		kW	51.7	56.1	60.4	41.2
Declared $EER_{DC,D}$			9.68	9.62	9.58	15.03
SSCEE	2,3,5	%	193.4	197.3	191.4	200.1
SSCEE Tier			Tier 2 (2021)	Tier 2 (2021)	Tier 2 (2021)	Tier 2 (2021)
Rated Cooling Capacity $P_{rated,c}$	2,4,5	kW	630.0	680.0	730.0	780.0
Declared Cooling Capacity 35°C Pdc	2,3,5	kW	626.2	675.7	725.3	774.7
Declared EER_d 35°C			3.19	3.27	3.35	3.37
Declared Cooling Capacity 30°C Pdc	2,3,5	kW	460.4	496.7	533.2	569.4
Declared EER_d 30°C			4.18	4.29	4.27	4.32
Declared Cooling Capacity 25°C Pdc	2,3,5	kW	294.6	317.8	341.1	364.2
Declared EER_d 25°C			5.41	5.58	5.55	5.72
Declared Cooling Capacity 20°C Pdc	2,3,5	kW	128.8	138.8	149.0	158.9
Declared EER_d 20°C			6.51	6.54	5.85	6.60
Sound Power Level		dB(A)	92	92	92	92
Air Volume		m³/h	247951	289276	330601	371926
Off mode P_{OFF}		kW	0.322	0.322	0.322	0.322
Thermostat-off mode P_{TO}		kW	3.832	4.318	4.703	5.303
Standby Mode P_{SB}		kW	0.504	0.514	0.524	0.534
Crankcase heater mode P_{CK}		kW	0.000	0.000	0.000	0.000

(1) Nominal conditions as stated in EU 2016/2281 Table 22.
(2) Nominal conditions as stated in EU 2016/2281 Table 21
(3) Performance data (Nett) is supplied in accordance with EN14511-1:2013.
(4) Performance data (Gross) is supplied excluding absorbed pump power as per EN14511-1:2013.
(5) All performance data based upon standard waterside configuration.

Technical Data

TCF23R18L-28, TCF23R20L-28, TCF23R22L-28, TCF23R24L-28

Ecodesign

	Notes:		TCF23R18L-28	TCF23R20L-28	TCF23R22L-28	TCF23R24L-28
SEPR	1,3,5		7.0	6.9	6.7	6.4
SEPR Tier			Tier 2 (2021)	Tier 2 (2021)	Tier 2 (2021)	Tier 2 (2021)
Annual Electricity Consumption		kWh/a	946226.0	1032137.7	1120760.6	1253481.9
Rated Refrigerant Capacity P_A	1,3,5	kW	894.9	954.2	1013.6	1072.8
Rated Power Input D_A		kW	292.1	304.2	320.3	337.7
Rated $EER_{DC,A}$			3.06	3.14	3.16	3.18
Declared Refrigerant Capacity P_B	1,3,5	kW	834.9	890.2	945.6	1000.8
Declared Power Input D_B		kW	193.1	201.2	210.7	221.4
Declared $EER_{DC,B}$			4.32	4.42	4.49	4.52
Declared Refrigerant Capacity P_C	1,3,5	kW	774.9	826.2	877.6	928.8
Declared Power Input D_C		kW	122.4	128.7	135.8	143.1
Declared $EER_{DC,C}$			6.33	6.42	6.46	6.49
Declared Refrigerant Capacity P_D	1,3,5	kW	714.9	762.2	809.6	856.8
Declared Power Input D_D		kW	72.0	83.7	95.4	116.7
Declared $EER_{DC,D}$			9.93	9.10	8.49	7.34
SSCEE	2,3,5	%	184.4	191.5	192.0	192.8
SSCEE Tier			Tier 2 (2021)	Tier 2 (2021)	Tier 2 (2021)	Tier 2 (2021)
Rated Cooling Capacity $P_{rated,c}$	2,4,5	kW	900.0	960.0	1020.0	1080.0
Declared Cooling Capacity 35°C Pdc	2,3,5	kW	894.9	954.2	1013.6	1072.8
Declared EER_d 35°C			3.06	3.14	3.16	3.18
Declared Cooling Capacity 30°C Pdc	2,3,5	kW	658.0	701.6	745.1	788.6
Declared EER_d 30°C			4.15	4.22	4.19	4.19
Declared Cooling Capacity 25°C Pdc	2,3,5	kW	421.2	449.0	476.7	504.4
Declared EER_d 25°C			4.91	5.38	5.42	5.51
Declared Cooling Capacity 20°C Pdc	2,3,5	kW	184.3	196.3	208.3	220.2
Declared EER_d 20°C			6.27	6.25	6.30	6.28
Sound Power Level		dB(A)	93	93	93	93
Air Volume		m³/h	371926	413252	454577	495902
Off mode P_{OFF}		kW	0.375	0.375	0.375	0.375
Thermostat-off mode P_{TO}		kW	5.148	5.764	6.439	7.199
Standby Mode P_{SB}		kW	0.596	0.606	0.616	0.626
Crankcase heater mode P_{CK}		kW	0.000	0.000	0.000	0.000

(1) Nominal conditions as stated in EU 2016/2281 Table 22.
(2) Nominal conditions as stated in EU 2016/2281 Table 21
(3) Performance data (Nett) is supplied in accordance with EN14511-1:2013.
(4) Performance data (Gross) is supplied excluding absorbed pump power as per EN14511-1:2013.
(5) All performance data based upon standard waterside configuration.

Technical Data

TCF24R16S-26, TCF24R18S-26, TCF24R20S-26

Ecodesign

	Notes:		TCF24R16S-26	TCF24R18S-26	TCF24R20S-26
SEPR	1,3,5		7.9	8.1	8.3
SEPR Tier			Tier 2 (2021)	Tier 2 (2021)	Tier 2 (2021)
Annual Electricity Consumption		kWh/a	768234.5	784949.0	805676.3
Rated Refrigerant Capacity P_A	1,3,5	kW	815.7	855.5	895.2
Rated Power Input D_A		kW	256.1	262.0	268.9
Rated $EER_{DC,A}$			3.19	3.26	3.33
Declared Refrigerant Capacity P_B	1,3,5	kW	761.1	798.2	835.2
Declared Power Input D_B		kW	171.5	175.5	180.4
Declared $EER_{DC,B}$			4.44	4.55	4.63
Declared Refrigerant Capacity P_C	1,3,5	kW	706.4	740.8	775.2
Declared Power Input D_C		kW	110.4	113.4	116.7
Declared $EER_{DC,C}$			6.40	6.54	6.64
Declared Refrigerant Capacity P_D	1,3,5	kW	651.7	683.5	715.2
Declared Power Input D_D		kW	49.0	49.7	50.7
Declared $EER_{DC,D}$			13.30	13.76	14.10
SSCEE	2,3,5	%	199.1	201.2	203.4
SSCEE Tier			Tier 2 (2021)	Tier 2 (2021)	Tier 2 (2021)
Rated Cooling Capacity $P_{rated,c}$	2,4,5	kW	820.0	860.0	900.0
Declared Cooling Capacity 35°C Pdc	2,3,5	kW	815.7	855.5	895.2
Declared EER_d 35°C			3.19	3.26	3.33
Declared Cooling Capacity 30°C Pdc	2,3,5	kW	599.9	629.2	658.4
Declared EER_d 30°C			4.24	4.23	4.29
Declared Cooling Capacity 25°C Pdc	2,3,5	kW	384.2	402.9	421.5
Declared EER_d 25°C			5.79	5.88	5.95
Declared Cooling Capacity 20°C Pdc	2,3,5	kW	168.4	176.5	184.7
Declared EER_d 20°C			6.41	6.48	6.52
Sound Power Level		dB(A)	94	93	93
Air Volume		m³/h	330601	371926	413252
Off mode P_{OFF}		kW	0.375	0.375	0.375
Thermostat-off mode P_{TO}		kW	4.270	4.508	4.797
Standby Mode P_{SB}		kW	0.616	0.626	0.636
Crankcase heater mode P_{CK}		kW	0.000	0.000	0.000

(1) Nominal conditions as stated in EU 2016/2281 Table 22.
(2) Nominal conditions as stated in EU 2016/2281 Table 21
(3) Performance data (Nett) is supplied in accordance with EN14511-1:2013.
(4) Performance data (Gross) is supplied excluding absorbed pump power as per EN14511-1:2013.
(5) All performance data based upon standard waterside configuration.

Technical Data

TCF24R22S-27, TCF24R24S-27

Ecodesign

	Notes:		TCF24R22S-27	TCF24R24S-27
SEPR	1,3,5		8.4	8.4
SEPR Tier			Tier 2 (2021)	Tier 2 (2021)
Annual Electricity Consumption		kWh/a	840820.0	882501.5
Rated Refrigerant Capacity P_A	1,3,5	kW	944.8	994.3
Rated Power Input D_A		kW	280.2	292.2
Rated $EER_{DC,A}$			3.37	3.40
Declared Refrigerant Capacity P_B	1,3,5	kW	881.5	927.7
Declared Power Input D_B		kW	188.0	196.7
Declared $EER_{DC,B}$			4.69	4.72
Declared Refrigerant Capacity P_C	1,3,5	kW	818.2	861.0
Declared Power Input D_C		kW	122.2	128.6
Declared $EER_{DC,C}$			6.69	6.69
Declared Refrigerant Capacity P_D	1,3,5	kW	754.8	794.3
Declared Power Input D_D		kW	52.8	55.3
Declared $EER_{DC,D}$			14.30	14.36
SSCEE	2,3,5	%	204.7	211.3
SSCEE Tier			Tier 2 (2021)	Tier 2 (2021)
Rated Cooling Capacity $P_{rated,c}$	2,4,5	kW	950.0	1000.0
Declared Cooling Capacity 35°C Pdc	2,3,5	kW	944.8	994.3
Declared EER_d 35°C			3.37	3.40
Declared Cooling Capacity 30°C Pdc	2,3,5	kW	694.8	731.2
Declared EER_d 30°C			4.34	4.37
Declared Cooling Capacity 25°C Pdc	2,3,5	kW	444.8	468.0
Declared EER_d 25°C			5.99	5.99
Declared Cooling Capacity 20°C Pdc	2,3,5	kW	194.8	204.9
Declared EER_d 20°C			6.52	7.34
Sound Power Level		dB(A)	93	93
Air Volume		m³/h	454577	495902
Off mode P_{OFF}		kW	0.375	0.375
Thermostat-off mode P_{TO}		kW	5.156	5.673
Standby Mode P_{SB}		kW	0.646	0.656
Crankcase heater mode P_{CK}		kW	0.000	0.000

(1) Nominal conditions as stated in EU 2016/2281 Table 22.
(2) Nominal conditions as stated in EU 2016/2281 Table 21
(3) Performance data (Nett) is supplied in accordance with EN14511-1:2013.
(4) Performance data (Gross) is supplied excluding absorbed pump power as per EN14511-1:2013.
(5) All performance data based upon standard waterside configuration.

Technical Data

TCF24R22L-21, TCF24R24L-21

Ecodesign

	Notes:		TCF24R22L-21	TCF24R24L-21
SEPR	1,3,5		7.2	7.7
SEPR Tier			Tier 2 (2021)	Tier 2 (2021)
Annual Electricity Consumption		kWh/a	1137527.9	1116348.7
Rated Refrigerant Capacity P_A	1,3,5	kW	1092.8	1152.0
Rated Power Input D_A		kW	370.4	382.9
Rated $EER_{DC,A}$			2.95	3.01
Declared Refrigerant Capacity P_B	1,3,5	kW	1019.5	1074.7
Declared Power Input D_B		kW	240.8	252.5
Declared $EER_{DC,B}$			4.23	4.26
Declared Refrigerant Capacity P_C	1,3,5	kW	946.1	997.4
Declared Power Input D_C		kW	177.3	159.5
Declared $EER_{DC,C}$			5.34	6.25
Declared Refrigerant Capacity P_D	1,3,5	kW	872.8	920.0
Declared Power Input D_D		kW	67.8	70.5
Declared $EER_{DC,D}$			12.87	13.05
SSCEE	2,3,5	%	188.2	180.2
SSCEE Tier			Tier 2 (2021)	Tier 2 (2021)
Rated Cooling Capacity $P_{rated,c}$	2,4,5	kW	1100.0	1160.0
Declared Cooling Capacity 35°C Pdc	2,3,5	kW	1092.8	1152.0
Declared EER_d 35°C			2.95	3.01
Declared Cooling Capacity 30°C Pdc	2,3,5	kW	803.3	846.8
Declared EER_d 30°C			4.20	4.18
Declared Cooling Capacity 25°C Pdc	2,3,5	kW	513.8	541.5
Declared EER_d 25°C			5.53	5.59
Declared Cooling Capacity 20°C Pdc	2,3,5	kW	224.4	236.2
Declared EER_d 20°C			5.85	4.96
Sound Power Level		dB(A)	95	95
Air Volume		m³/h	454577	495902
Off mode P_{OFF}		kW	0.427	0.427
Thermostat-off mode P_{TO}		kW	7.212	7.977
Standby Mode P_{SB}		kW	0.719	0.729
Crankcase heater mode P_{CK}		kW	0.000	0.000

(1) Nominal conditions as stated in EU 2016/2281 Table 22.
(2) Nominal conditions as stated in EU 2016/2281 Table 21
(3) Performance data (Nett) is supplied in accordance with EN14511-1:2013.
(4) Performance data (Gross) is supplied excluding absorbed pump power as per EN14511-1:2013.
(5) All performance data based upon standard waterside configuration.

Technical Data - TCF X

TCF11X06S-07, TCF11X08S-07, TCF11X06L-11

Ecodesign

	Notes:		TCF11X06S-07	TCF11X08S-07	TCF11X06L-11
SEPR	1,3,5		7.5	7.8	6.2
SEPR Tier			Tier 2 (2021)	Tier 2 (2021)	Tier 2 (2021)
Annual Electricity Consumption		kWh/a	245406.1	247036.6	420211.0
Rated Refrigerant Capacity P_A	1,3,5	kW	248.3	258.3	347.4
Rated Power Input D_A		kW	86.3	84.4	171.7
Rated $EER_{DC,A}$			2.88	3.06	2.02
Declared Refrigerant Capacity P_B	1,3,5	kW	231.7	241.0	324.1
Declared Power Input D_B		kW	56.5	55.8	102.1
Declared $EER_{DC,B}$			4.10	4.32	3.17
Declared Refrigerant Capacity P_C	1,3,5	kW	215.0	223.7	300.7
Declared Power Input D_C		kW	36.8	36.4	62.8
Declared $EER_{DC,C}$			5.84	6.14	4.79
Declared Refrigerant Capacity P_D	1,3,5	kW	198.3	206.3	277.4
Declared Power Input D_D		kW	14.4	15.0	23.5
Declared $EER_{DC,D}$			13.77	13.72	11.82
SSCEE	2,3,5	%	160.1	168.4	145.4
SSCEE Tier			Tier 1 (2018)	Tier 2 (2021)	Not Compliant
Rated Cooling Capacity $P_{rated,c}$	2,4,5	kW	250.0	260.0	350.0
Declared Cooling Capacity 35°C Pdc	2,3,5	kW	248.3	258.3	347.4
Declared EER_d 35°C			2.88	3.06	2.02
Declared Cooling Capacity 30°C Pdc	2,3,5	kW	182.6	189.9	255.3
Declared EER_d 30°C			3.88	4.07	3.07
Declared Cooling Capacity 25°C Pdc	2,3,5	kW	116.8	121.5	163.2
Declared EER_d 25°C			5.19	5.37	4.20
Declared Cooling Capacity 20°C Pdc	2,3,5	kW	77.1	73.9	100.0
Declared EER_d 20°C			3.97	4.26	5.15
Sound Power Level		dB(A)	87	87	87
Air Volume		m³/h	123975	165301	123975
Off mode P_{OFF}		kW	0.249	0.249	0.249
Thermostat-off mode P_{TO}		kW	1.658	1.682	2.588
Standby Mode P_{SB}		kW	0.340	0.350	0.340
Crankcase heater mode P_{CK}		kW	0.000	0.000	0.000

(1) Nominal conditions as stated in EU 2016/2281 Table 22.
(2) Nominal conditions as stated in EU 2016/2281 Table 21
(3) Performance data (Nett) is supplied in accordance with EN14511-1:2013.
(4) Performance data (Gross) is supplied excluding absorbed pump power as per EN14511-1:2013.
(5) All performance data based upon standard waterside configuration.

Technical Data

TCF11X08L-08, TCF11X10L-10, TCF12X08S-09

Ecodesign

	Notes:		TCF11X08L-08	TCF11X10L-10	TCF12X08S-09
SEPR	1,3,5		6.5	6.6	6.7
SEPR Tier			Tier 2 (2021)	Tier 2 (2021)	Tier 2 (2021)
Annual Electricity Consumption		kWh/a	440394.4	459456.6	460816.7
Rated Refrigerant Capacity P_A	1,3,5	kW	382.9	407.4	412.6
Rated Power Input D_A		kW	178.6	177.8	144.1
Rated $EER_{DC,A}$			2.14	2.29	2.86
Declared Refrigerant Capacity P_B	1,3,5	kW	357.2	380.0	384.9
Declared Power Input D_B		kW	106.6	108.1	93.0
Declared $EER_{DC,B}$			3.35	3.52	4.14
Declared Refrigerant Capacity P_C	1,3,5	kW	331.5	352.7	357.2
Declared Power Input D_C		kW	66.2	68.0	59.3
Declared $EER_{DC,C}$			5.01	5.18	6.03
Declared Refrigerant Capacity P_D	1,3,5	kW	305.9	325.4	329.6
Declared Power Input D_D		kW	24.7	26.8	35.4
Declared $EER_{DC,D}$			12.39	12.13	9.30
SSCEE	2,3,5	%	151.6	162.1	161.5
SSCEE Tier			Tier 1 (2018)	Tier 1 (2018)	Tier 1 (2018)
Rated Cooling Capacity $P_{rated,c}$	2,4,5	kW	385.0	410.0	415.0
Declared Cooling Capacity 35°C Pdc	2,3,5	kW	382.9	407.4	412.6
Declared EER_d 35°C			2.14	2.29	2.86
Declared Cooling Capacity 30°C Pdc	2,3,5	kW	281.5	299.5	303.3
Declared EER_d 30°C			3.30	3.46	3.98
Declared Cooling Capacity 25°C Pdc	2,3,5	kW	180.2	191.6	194.1
Declared EER_d 25°C			4.02	4.61	4.94
Declared Cooling Capacity 20°C Pdc	2,3,5	kW	96.9	93.8	73.2
Declared EER_d 20°C			5.68	5.71	4.18
Sound Power Level		dB(A)	87	87	89
Air Volume		m³/h	165301	206626	165301
Off mode P_{OFF}		kW	0.249	0.249	0.301
Thermostat-off mode P_{TO}		kW	2.139	2.625	2.445
Standby Mode P_{SB}		kW	0.350	0.360	0.453
Crankcase heater mode P_{CK}		kW	0.000	0.000	0.000

(1) Nominal conditions as stated in EU 2016/2281 Table 22.
(2) Nominal conditions as stated in EU 2016/2281 Table 21
(3) Performance data (Nett) is supplied in accordance with EN14511-1:2013.
(4) Performance data (Gross) is supplied excluding absorbed pump power as per EN14511-1:2013.
(5) All performance data based upon standard waterside configuration.

Technical Data

TCF12X10S-05, TCF12X12S-05, TCF12X14S-05

Ecodesign

	Notes:		TCF12X10S-05	TCF12X12S-05	TCF12X14S-05
SEPR	1,3,5		6.4	8.4	8.3
SEPR Tier			Tier 2 (2021)	Tier 2 (2021)	Tier 2 (2021)
Annual Electricity Consumption		kWh/a	552078.4	452194.7	479301.4
Rated Refrigerant Capacity P_A	1,3,5	kW	476.7	506.3	535.9
Rated Power Input D_A		kW	157.1	159.7	166.2
Rated $EER_{DC,A}$			3.03	3.17	3.22
Declared Refrigerant Capacity P_B	1,3,5	kW	444.7	472.3	499.9
Declared Power Input D_B		kW	102.5	105.6	110.3
Declared $EER_{DC,B}$			4.34	4.47	4.53
Declared Refrigerant Capacity P_C	1,3,5	kW	412.7	438.3	463.9
Declared Power Input D_C		kW	66.8	69.4	72.8
Declared $EER_{DC,C}$			6.18	6.31	6.37
Declared Refrigerant Capacity P_D	1,3,5	kW	380.7	404.3	427.9
Declared Power Input D_D		kW	47.3	25.5	27.6
Declared $EER_{DC,D}$			8.05	15.88	15.49
SSCEE	2,3,5	%	188.4	190.8	190.1
SSCEE Tier			Tier 2 (2021)	Tier 2 (2021)	Tier 2 (2021)
Rated Cooling Capacity $P_{rated,c}$	2,4,5	kW	480.0	510.0	540.0
Declared Cooling Capacity 35°C Pdc	2,3,5	kW	476.7	506.3	535.9
Declared EER_d 35°C			3.03	3.17	3.22
Declared Cooling Capacity 30°C Pdc	2,3,5	kW	350.3	372.1	393.8
Declared EER_d 30°C			4.04	4.16	4.25
Declared Cooling Capacity 25°C Pdc	2,3,5	kW	224.0	237.9	251.7
Declared EER_d 25°C			5.39	5.41	5.55
Declared Cooling Capacity 20°C Pdc	2,3,5	kW	97.7	103.7	109.6
Declared EER_d 20°C			6.41	6.40	5.98
Sound Power Level		dB(A)	89	90	90
Air Volume		m³/h	206626	247951	289276
Off mode P_{OFF}		kW	0.301	0.301	0.301
Thermostat-off mode P_{TO}		kW	3.347	3.655	4.063
Standby Mode P_{SB}		kW	0.463	0.473	0.483
Crankcase heater mode P_{CK}		kW	0.000	0.000	0.000

(1) Nominal conditions as stated in EU 2016/2281 Table 22.
(2) Nominal conditions as stated in EU 2016/2281 Table 21
(3) Performance data (Nett) is supplied in accordance with EN14511-1:2013.
(4) Performance data (Gross) is supplied excluding absorbed pump power as per EN14511-1:2013.
(5) All performance data based upon standard waterside configuration.

Technical Data

TCF12X12L-12, TCF12X14L-12, TCF12X16L-12

Ecodesign

	Notes:		TCF12X12L-12	TCF12X14L-12	TCF12X16L-12
SEPR	1,3,5		6.3	6.5	7.5
SEPR Tier			Tier 2 (2021)	Tier 2 (2021)	Tier 2 (2021)
Annual Electricity Consumption		kWh/a	703211.8	710512.7	727157.6
Rated Refrigerant Capacity P_A	1,3,5	kW	596.6	616.5	734.9
Rated Power Input D_A		kW	223.7	215.5	269.3
Rated $EER_{DC,A}$			2.67	2.86	2.73
Declared Refrigerant Capacity P_B	1,3,5	kW	556.6	575.2	685.6
Declared Power Input D_B		kW	140.7	137.9	168.3
Declared $EER_{DC,B}$			3.96	4.17	4.07
Declared Refrigerant Capacity P_C	1,3,5	kW	516.6	533.8	636.2
Declared Power Input D_C		kW	87.8	87.3	108.3
Declared $EER_{DC,C}$			5.88	6.11	5.88
Declared Refrigerant Capacity P_D	1,3,5	kW	476.6	492.5	586.9
Declared Power Input D_D		kW	56.1	58.6	42.7
Declared $EER_{DC,D}$			8.50	8.40	13.74
SSCEE	2,3,5	%	167.6	168.5	167.1
SSCEE Tier			Tier 1 (2018)	Tier 1 (2018)	Tier 1 (2018)
Rated Cooling Capacity $P_{rated,c}$	2,4,5	kW	600.0	620.0	740.0
Declared Cooling Capacity 35°C Pdc	2,3,5	kW	596.6	616.5	734.9
Declared EER_d 35°C			2.67	2.86	2.73
Declared Cooling Capacity 30°C Pdc	2,3,5	kW	438.7	453.3	540.2
Declared EER_d 30°C			3.57	3.73	3.78
Declared Cooling Capacity 25°C Pdc	2,3,5	kW	280.8	290.2	345.4
Declared EER_d 25°C			4.48	4.26	4.86
Declared Cooling Capacity 20°C Pdc	2,3,5	kW	122.9	127.0	150.7
Declared EER_d 20°C			6.08	6.22	5.12
Sound Power Level		dB(A)	90	90	90
Air Volume		m³/h	247951	289276	330601
Off mode P_{OFF}		kW	0.301	0.301	0.301
Thermostat-off mode P_{TO}		kW	3.444	3.494	5.095
Standby Mode P_{SB}		kW	0.473	0.483	0.493
Crankcase heater mode P_{CK}		kW	0.000	0.000	0.000

(1) Nominal conditions as stated in EU 2016/2281 Table 22.
(2) Nominal conditions as stated in EU 2016/2281 Table 21
(3) Performance data (Nett) is supplied in accordance with EN14511-1:2013.
(4) Performance data (Gross) is supplied excluding absorbed pump power as per EN14511-1:2013.
(5) All performance data based upon standard waterside configuration.

Technical Data

TCF12X18L-13, TCF12X20L-13

Ecodesign

	Notes:		TCF12X18L-13	TCF12X20L-13
SEPR	1,3,5		7.7	7.7
SEPR Tier			Tier 2 (2021)	Tier 2 (2021)
Annual Electricity Consumption		kWh/a	734734.9	748054.3
Rated Refrigerant Capacity P_A	1,3,5	kW	754.9	774.7
Rated Power Input D_A		kW	270.6	272.7
Rated $EER_{DC,A}$			2.79	2.84
Declared Refrigerant Capacity P_B	1,3,5	kW	704.2	722.7
Declared Power Input D_B		kW	169.7	171.5
Declared $EER_{DC,B}$			4.15	4.21
Declared Refrigerant Capacity P_C	1,3,5	kW	653.5	670.7
Declared Power Input D_C		kW	109.0	110.5
Declared $EER_{DC,C}$			6.00	6.07
Declared Refrigerant Capacity P_D	1,3,5	kW	602.9	618.7
Declared Power Input D_D		kW	43.5	44.7
Declared $EER_{DC,D}$			13.87	13.83
SSCEE	2,3,5	%	177.4	180.2
SSCEE Tier			Tier 1 (2018)	Tier 2 (2021)
Rated Cooling Capacity $P_{rated,c}$	2,4,5	kW	760.0	780.0
Declared Cooling Capacity 35°C Pdc	2,3,5	kW	754.9	774.7
Declared EER_d 35°C			2.79	2.84
Declared Cooling Capacity 30°C Pdc	2,3,5	kW	554.9	569.4
Declared EER_d 30°C			3.86	3.94
Declared Cooling Capacity 25°C Pdc	2,3,5	kW	354.9	364.1
Declared EER_d 25°C			4.97	5.06
Declared Cooling Capacity 20°C Pdc	2,3,5	kW	154.9	158.9
Declared EER_d 20°C			6.04	6.08
Sound Power Level		dB(A)	90	90
Air Volume		m³/h	371926	413252
Off mode P_{OFF}		kW	0.301	0.301
Thermostat-off mode P_{TO}		kW	5.143	5.350
Standby Mode P_{SB}		kW	0.503	0.513
Crankcase heater mode P_{CK}		kW	0.000	0.000

(1) Nominal conditions as stated in EU 2016/2281 Table 22.
(2) Nominal conditions as stated in EU 2016/2281 Table 21
(3) Performance data (Nett) is supplied in accordance with EN14511-1:2013.
(4) Performance data (Gross) is supplied excluding absorbed pump power as per EN14511-1:2013.
(5) All performance data based upon standard waterside configuration.

Technical Data

TCF22X10S-22, TCF22X12S-22, TCF22X14S-22

Ecodesign

	Notes:		TCF22X10S-22	TCF22X12S-22	TCF22X14S-22
SEPR	1,3,5		8.0	8.1	8.1
SEPR Tier			Tier 2 (2021)	Tier 2 (2021)	Tier 2 (2021)
Annual Electricity Consumption		kWh/a	408021.0	450352.5	474139.5
Rated Refrigerant Capacity P_A	1,3,5	kW	437.3	486.7	516.3
Rated Power Input D_A		kW	134.4	144.9	150.7
Rated $EER_{DC,A}$			3.25	3.36	3.43
Declared Refrigerant Capacity P_B	1,3,5	kW	408.0	454.0	481.7
Declared Power Input D_B		kW	88.6	96.7	100.9
Declared $EER_{DC,B}$			4.61	4.70	4.77
Declared Refrigerant Capacity P_C	1,3,5	kW	378.7	421.4	447.0
Declared Power Input D_C		kW	57.2	63.2	66.3
Declared $EER_{DC,C}$			6.62	6.66	6.74
Declared Refrigerant Capacity P_D	1,3,5	kW	349.3	388.7	412.3
Declared Power Input D_D		kW	27.2	30.2	32.1
Declared $EER_{DC,D}$			12.84	12.89	12.86
SSCEE	2,3,5	%	168.1	191.3	193.9
SSCEE Tier			Tier 1 (2018)	Tier 2 (2021)	Tier 2 (2021)
Rated Cooling Capacity $P_{rated,c}$	2,4,5	kW	440.0	490.0	520.0
Declared Cooling Capacity 35°C Pdc	2,3,5	kW	437.3	486.7	516.3
Declared EER_d 35°C			3.25	3.36	3.43
Declared Cooling Capacity 30°C Pdc	2,3,5	kW	321.5	357.8	379.5
Declared EER_d 30°C			4.20	4.30	4.41
Declared Cooling Capacity 25°C Pdc	2,3,5	kW	205.7	228.8	242.6
Declared EER_d 25°C			5.70	5.61	5.62
Declared Cooling Capacity 20°C Pdc	2,3,5	kW	78.3	99.9	105.8
Declared EER_d 20°C			3.75	5.82	5.96
Sound Power Level		dB(A)	89	90	90
Air Volume		m³/h	206626	247951	289276
Off mode P_{OFF}		kW	0.322	0.322	0.322
Thermostat-off mode P_{TO}		kW	2.683	3.284	3.676
Standby Mode P_{SB}		kW	0.484	0.494	0.504
Crankcase heater mode P_{CK}		kW	0.000	0.000	0.000

(1) Nominal conditions as stated in EU 2016/2281 Table 22.
(2) Nominal conditions as stated in EU 2016/2281 Table 21
(3) Performance data (Nett) is supplied in accordance with EN14511-1:2013.
(4) Performance data (Gross) is supplied excluding absorbed pump power as per EN14511-1:2013.
(5) All performance data based upon standard waterside configuration.

Technical Data

TCF22X12L-23, TCF22X14L-23, TCF22X16L-23

Ecodesign

	Notes:		TCF22X12L-23	TCF22X14L-23	TCF22X16L-23
SEPR	1,3,5		7.2	7.6	6.9
SEPR Tier			Tier 2 (2021)	Tier 2 (2021)	Tier 2 (2021)
Annual Electricity Consumption		kWh/a	614360.2	602127.0	799109.2
Rated Refrigerant Capacity P_A	1,3,5	kW	596.7	616.7	735.1
Rated Power Input D_A		kW	210.2	202.5	247.9
Rated $EER_{DC,A}$			2.84	3.04	2.97
Declared Refrigerant Capacity P_B	1,3,5	kW	556.7	575.3	685.8
Declared Power Input D_B		kW	133.2	130.3	157.0
Declared $EER_{DC,B}$			4.18	4.41	4.37
Declared Refrigerant Capacity P_C	1,3,5	kW	516.7	534.0	636.5
Declared Power Input D_C		kW	83.0	82.5	101.6
Declared $EER_{DC,C}$			6.22	6.48	6.27
Declared Refrigerant Capacity P_D	1,3,5	kW	476.7	492.7	587.1
Declared Power Input D_D		kW	42.7	41.4	63.0
Declared $EER_{DC,D}$			11.15	11.91	9.32
SSCEE	2,3,5	%	152.0	165.4	174.0
SSCEE Tier			Not Compliant	Tier 1 (2018)	Tier 1 (2018)
Rated Cooling Capacity $P_{rated,c}$	2,4,5	kW	600.0	620.0	740.0
Declared Cooling Capacity 35°C Pdc	2,3,5	kW	596.7	616.7	735.1
Declared EER_d 35°C			2.84	3.04	2.97
Declared Cooling Capacity 30°C Pdc	2,3,5	kW	438.8	453.5	540.4
Declared EER_d 30°C			3.73	3.89	3.99
Declared Cooling Capacity 25°C Pdc	2,3,5	kW	280.9	290.3	345.7
Declared EER_d 25°C			3.61	4.24	5.04
Declared Cooling Capacity 20°C Pdc	2,3,5	kW	123.0	127.2	150.9
Declared EER_d 20°C			5.30	5.45	5.22
Sound Power Level		dB(A)	90	90	90
Air Volume		m³/h	247951	289276	330601
Off mode P_{OFF}		kW	0.322	0.322	0.322
Thermostat-off mode P_{TO}		kW	3.305	3.348	4.860
Standby Mode P_{SB}		kW	0.494	0.504	0.514
Crankcase heater mode P_{CK}		kW	0.000	0.000	0.000

(1) Nominal conditions as stated in EU 2016/2281 Table 22.
(2) Nominal conditions as stated in EU 2016/2281 Table 21
(3) Performance data (Nett) is supplied in accordance with EN14511-1:2013.
(4) Performance data (Gross) is supplied excluding absorbed pump power as per EN14511-1:2013.
(5) All performance data based upon standard waterside configuration.

Technical Data

TCF22X18L-23, TCF22X20L-23

Ecodesign

	Notes:		TCF22X18L-23	TCF22X20L-23
SEPR	1,3,5		7.0	7.1
SEPR Tier			Tier 2 (2021)	Tier 2 (2021)
Annual Electricity Consumption		kWh/a	802162.3	812174.6
Rated Refrigerant Capacity P_A	1,3,5	kW	755.0	774.8
Rated Power Input D_A		kW	246.2	247.2
Rated $EER_{DC,A}$			3.07	3.13
Declared Refrigerant Capacity P_B	1,3,5	kW	704.3	722.8
Declared Power Input D_B		kW	156.9	158.2
Declared $EER_{DC,B}$			4.49	4.57
Declared Refrigerant Capacity P_C	1,3,5	kW	653.7	670.8
Declared Power Input D_C		kW	101.4	102.6
Declared $EER_{DC,C}$			6.44	6.54
Declared Refrigerant Capacity P_D	1,3,5	kW	603.0	618.8
Declared Power Input D_D		kW	63.8	64.8
Declared $EER_{DC,D}$			9.46	9.54
SSCEE	2,3,5	%	167.5	181.6
SSCEE Tier			Tier 1 (2018)	Tier 2 (2021)
Rated Cooling Capacity $P_{rated,c}$	2,4,5	kW	760.0	780.0
Declared Cooling Capacity 35°C Pdc	2,3,5	kW	755.0	774.8
Declared EER_d 35°C			3.07	3.13
Declared Cooling Capacity 30°C Pdc	2,3,5	kW	555.0	569.6
Declared EER_d 30°C			4.09	4.19
Declared Cooling Capacity 25°C Pdc	2,3,5	kW	355.0	364.3
Declared EER_d 25°C			4.36	5.28
Declared Cooling Capacity 20°C Pdc	2,3,5	kW	155.0	159.0
Declared EER_d 20°C			5.31	5.38
Sound Power Level		dB(A)	90	90
Air Volume		m³/h	371926	413252
Off mode P_{OFF}		kW	0.322	0.322
Thermostat-off mode P_{TO}		kW	5.011	5.185
Standby Mode P_{SB}		kW	0.524	0.534
Crankcase heater mode P_{CK}		kW	0.000	0.000

(1) Nominal conditions as stated in EU 2016/2281 Table 22.
(2) Nominal conditions as stated in EU 2016/2281 Table 21
(3) Performance data (Nett) is supplied in accordance with EN14511-1:2013.
(4) Performance data (Gross) is supplied excluding absorbed pump power as per EN14511-1:2013.
(5) All performance data based upon standard waterside configuration.

Technical Data

TCF23X12S-24, TCF23X14S-24, TCF23X16S-25, TCF23X18S-25

Ecodesign

	Notes:		TCF23X12S-24	TCF23X14S-24	TCF23X16S-25	TCF23X18S-25
SEPR	1,3,5		6.7	7.0	7.0	8.3
SEPR Tier			Tier 2 (2021)	Tier 2 (2021)	Tier 2 (2021)	Tier 2 (2021)
Annual Electricity Consumption		kWh/a	649673.5	679172.5	725762.8	662985.8
Rated Refrigerant Capacity P_A	1,3,5	kW	586.7	636.3	685.9	735.3
Rated Power Input D_A		kW	251.3	208.2	217.9	229.2
Rated $EER_{DC,A}$			2.34	3.06	3.15	3.21
Declared Refrigerant Capacity P_B	1,3,5	kW	547.4	593.6	639.9	686.0
Declared Power Input D_B		kW	128.9	135.7	143.2	152.1
Declared $EER_{DC,B}$			4.25	4.37	4.47	4.51
Declared Refrigerant Capacity P_C	1,3,5	kW	508.0	550.9	593.9	636.7
Declared Power Input D_C		kW	81.8	87.1	92.7	99.3
Declared $EER_{DC,C}$			6.21	6.32	6.40	6.41
Declared Refrigerant Capacity P_D	1,3,5	kW	468.7	508.3	547.9	587.3
Declared Power Input D_D		kW	51.1	52.7	57.0	39.2
Declared $EER_{DC,D}$			9.18	9.64	9.61	15.00
SSCEE	2,3,5	%	162.4	192.4	192.7	193.9
SSCEE Tier			Tier 1 (2018)	Tier 2 (2021)	Tier 2 (2021)	Tier 2 (2021)
Rated Cooling Capacity $P_{rated,c}$	2,4,5	kW	590.0	640.0	690.0	740.0
Declared Cooling Capacity 35°C Pdc	2,3,5	kW	586.7	636.3	685.9	735.3
Declared EER_d 35°C			2.34	3.06	3.15	3.21
Declared Cooling Capacity 30°C Pdc	2,3,5	kW	431.5	467.8	504.3	540.6
Declared EER_d 30°C			3.42	4.19	4.16	4.22
Declared Cooling Capacity 25°C Pdc	2,3,5	kW	276.2	299.4	322.7	345.9
Declared EER_d 25°C			4.82	5.59	5.56	5.63
Declared Cooling Capacity 20°C Pdc	2,3,5	kW	120.9	131.0	141.2	151.1
Declared EER_d 20°C			5.37	6.19	6.27	6.20
Sound Power Level		dB(A)	91	91	91	91
Air Volume		m³/h	247951	289276	330601	371926
Off mode P_{OFF}		kW	0.375	0.375	0.375	0.375
Thermostat-off mode P_{TO}		kW	3.285	3.739	4.108	4.669
Standby Mode P_{SB}		kW	0.596	0.606	0.616	0.626
Crankcase heater mode P_{CK}		kW	0.000	0.000	0.000	0.000

(1) Nominal conditions as stated in EU 2016/2281 Table 22.
(2) Nominal conditions as stated in EU 2016/2281 Table 21
(3) Performance data (Nett) is supplied in accordance with EN14511-1:2013.
(4) Performance data (Gross) is supplied excluding absorbed pump power as per EN14511-1:2013.
(5) All performance data based upon standard waterside configuration.

Technical Data

TCF23X18L-28, TCF23X20L-28, TCF23X22L-28, TCF23X24L-28

Ecodesign

	Notes:		TCF23X18L-28	TCF23X20L-28	TCF23X22L-28	TCF23X24L-28
SEPR	1,3,5		6.7	6.7	6.9	6.2
SEPR Tier			Tier 2 (2021)	Tier 2 (2021)	Tier 2 (2021)	Tier 2 (2021)
Annual Electricity Consumption		kWh/a	901527.8	1000250.1	982593.8	1226050.4
Rated Refrigerant Capacity P_A	1,3,5	kW	815.9	895.1	910.1	1013.7
Rated Power Input D_A		kW	296.7	318.7	310.1	350.0
Rated $EER_{DC,A}$			2.75	2.81	2.93	2.90
Declared Refrigerant Capacity P_B	1,3,5	kW	761.2	835.1	849.1	945.7
Declared Power Input D_B		kW	187.1	202.8	199.9	223.0
Declared $EER_{DC,B}$			4.07	4.12	4.25	4.24
Declared Refrigerant Capacity P_C	1,3,5	kW	706.5	775.1	788.1	877.7
Declared Power Input D_C		kW	116.2	127.1	126.2	142.8
Declared $EER_{DC,C}$			6.08	6.10	6.24	6.15
Declared Refrigerant Capacity P_D	1,3,5	kW	651.9	715.1	727.1	809.7
Declared Power Input D_D		kW	68.1	77.7	75.4	110.4
Declared $EER_{DC,D}$			9.57	9.20	9.64	7.34
SSCEE	2,3,5	%	175.4	176.9	180.1	182.2
SSCEE Tier			Tier 1 (2018)	Tier 1 (2018)	Tier 2 (2021)	Tier 2 (2021)
Rated Cooling Capacity $P_{rated,c}$	2,4,5	kW	820.0	900.0	915.0	1020.0
Declared Cooling Capacity 35°C Pdc	2,3,5	kW	815.9	895.1	910.1	1013.7
Declared EER_d 35°C			2.75	2.81	2.93	2.90
Declared Cooling Capacity 30°C Pdc	2,3,5	kW	600.1	658.2	669.3	745.3
Declared EER_d 30°C			3.94	4.03	4.06	4.03
Declared Cooling Capacity 25°C Pdc	2,3,5	kW	384.3	421.4	428.5	476.9
Declared EER_d 25°C			4.79	4.89	4.95	5.34
Declared Cooling Capacity 20°C Pdc	2,3,5	kW	168.5	184.5	187.7	208.5
Declared EER_d 20°C			5.81	5.71	5.85	5.65
Sound Power Level		dB(A)	92	92	92	92
Air Volume		m³/h	371926	413252	454577	495902
Off mode P_{OFF}		kW	0.375	0.375	0.375	0.375
Thermostat-off mode P_{TO}		kW	4.121	4.933	4.948	6.260
Standby Mode P_{SB}		kW	0.626	0.636	0.646	0.656
Crankcase heater mode P_{CK}		kW	0.000	0.000	0.000	0.000

(1) Nominal conditions as stated in EU 2016/2281 Table 22.
(2) Nominal conditions as stated in EU 2016/2281 Table 21
(3) Performance data (Nett) is supplied in accordance with EN14511-1:2013.
(4) Performance data (Gross) is supplied excluding absorbed pump power as per EN14511-1:2013.
(5) All performance data based upon standard waterside configuration.

Technical Data

TCF24X16S-26, TCF24X18S-26, TCF24X20S-26

Ecodesign

	Notes:		TCF24X16S-26	TCF24X18S-26	TCF24X20S-26
SEPR	1,3,5		7.8	8.0	8.1
SEPR Tier			Tier 2 (2021)	Tier 2 (2021)	Tier 2 (2021)
Annual Electricity Consumption		kWh/a	715443.1	763452.2	785982.8
Rated Refrigerant Capacity P_A	1,3,5	kW	746.5	816.0	855.7
Rated Power Input D_A		kW	262.1	270.6	276.6
Rated $EER_{DC,A}$			2.85	3.02	3.09
Declared Refrigerant Capacity P_B	1,3,5	kW	696.5	761.3	798.4
Declared Power Input D_B		kW	168.4	176.2	180.9
Declared $EER_{DC,B}$			4.14	4.32	4.41
Declared Refrigerant Capacity P_C	1,3,5	kW	646.5	706.6	741.0
Declared Power Input D_C		kW	107.3	112.4	116.3
Declared $EER_{DC,C}$			6.03	6.29	6.37
Declared Refrigerant Capacity P_D	1,3,5	kW	596.5	652.0	683.7
Declared Power Input D_D		kW	41.5	46.1	47.2
Declared $EER_{DC,D}$			14.36	14.16	14.49
SSCEE	2,3,5	%	185.3	194.0	194.9
SSCEE Tier			Tier 2 (2021)	Tier 2 (2021)	Tier 2 (2021)
Rated Cooling Capacity $P_{rated,c}$	2,4,5	kW	750.0	820.0	860.0
Declared Cooling Capacity 35°C Pdc	2,3,5	kW	746.5	816.0	855.7
Declared EER_d 35°C			2.85	3.02	3.09
Declared Cooling Capacity 30°C Pdc	2,3,5	kW	549.2	600.2	629.4
Declared EER_d 30°C			3.95	4.19	4.15
Declared Cooling Capacity 25°C Pdc	2,3,5	kW	351.8	384.4	403.1
Declared EER_d 25°C			5.33	5.78	5.84
Declared Cooling Capacity 20°C Pdc	2,3,5	kW	154.4	168.6	176.7
Declared EER_d 20°C			6.09	6.02	6.03
Sound Power Level		dB(A)	91	92	92
Air Volume		m³/h	330601	371926	413252
Off mode P_{OFF}		kW	0.427	0.427	0.427
Thermostat-off mode P_{TO}		kW	3.462	4.027	4.305
Standby Mode P_{SB}		kW	0.719	0.729	0.739
Crankcase heater mode P_{CK}		kW	0.000	0.000	0.000

(1) Nominal conditions as stated in EU 2016/2281 Table 22.
(2) Nominal conditions as stated in EU 2016/2281 Table 21
(3) Performance data (Nett) is supplied in accordance with EN14511-1:2013.
(4) Performance data (Gross) is supplied excluding absorbed pump power as per EN14511-1:2013.
(5) All performance data based upon standard waterside configuration.

Technical Data

TCF24X22S-27, TCF24X24S-27 , TCF24X22L-21, TCF24X24L-21

Ecodesign

	Notes:		TCF24X22S-27	TCF24X24S-27	TCF24X22L-21	TCF24X24L-21
SEPR	1,3,5		8.2	8.2	7.3	7.4
SEPR Tier			Tier 2 (2021)	Tier 2 (2021)	Tier 2 (2021)	Tier 2 (2021)
Annual Electricity Consumption		kWh/a	825416.7	869694.2	1060746.3	1081772.2
Rated Refrigerant Capacity P_A	1,3,5	kW	905.3	954.9	1033.7	1073.3
Rated Power Input D_A		kW	287.9	300.4	394.7	401.0
Rated $EER_{DC,A}$			3.14	3.18	2.62	2.68
Declared Refrigerant Capacity P_B	1,3,5	kW	844.7	890.9	964.4	1001.3
Declared Power Input D_B		kW	189.3	198.2	250.7	254.6
Declared $EER_{DC,B}$			4.46	4.49	3.85	3.93
Declared Refrigerant Capacity P_C	1,3,5	kW	784.0	826.9	895.0	929.3
Declared Power Input D_C		kW	122.3	128.9	154.4	157.6
Declared $EER_{DC,C}$			6.41	6.41	5.80	5.90
Declared Refrigerant Capacity P_D	1,3,5	kW	723.3	762.9	825.7	857.3
Declared Power Input D_D		kW	49.6	52.5	63.4	64.7
Declared $EER_{DC,D}$			14.57	14.53	13.03	13.24
SSCEE	2,3,5	%	195.3	205.4	177.8	179.3
SSCEE Tier			Tier 2 (2021)	Tier 2 (2021)	Tier 1 (2018)	Tier 2 (2021)
Rated Cooling Capacity $P_{rated,c}$	2,4,5	kW	910.0	960.0	1040.0	1080.0
Declared Cooling Capacity 35°C Pdc	2,3,5	kW	905.3	954.9	1033.7	1073.3
Declared EER_d 35°C			3.14	3.18	2.62	2.68
Declared Cooling Capacity 30°C Pdc	2,3,5	kW	665.9	702.2	760.0	789.1
Declared EER_d 30°C			4.14	4.17	4.08	4.09
Declared Cooling Capacity 25°C Pdc	2,3,5	kW	426.4	449.6	486.3	504.9
Declared EER_d 25°C			5.87	5.88	5.36	5.43
Declared Cooling Capacity 20°C Pdc	2,3,5	kW	186.9	197.0	212.6	220.7
Declared EER_d 20°C			6.01	7.27	5.27	5.30
Sound Power Level		dB(A)	92	93	93	93
Air Volume		m³/h	454577	495902	454577	495902
Off mode P_{OFF}		kW	0.427	0.427	0.427	0.427
Thermostat-off mode P_{TO}		kW	4.650	5.140	6.300	6.708
Standby Mode P_{SB}		kW	0.749	0.759	0.749	0.759
Crankcase heater mode P_{CK}		kW	0.000	0.000	0.000	0.000

(1) Nominal conditions as stated in EU 2016/2281 Table 22.
(2) Nominal conditions as stated in EU 2016/2281 Table 21
(3) Performance data (Nett) is supplied in accordance with EN14511-1:2013.
(4) Performance data (Gross) is supplied excluding absorbed pump power as per EN14511-1:2013.
(5) All performance data based upon standard waterside configuration.

After Sales

Warranty

All Airedale products or parts (non consumable) supplied for installation within the UK mainland and commissioned by an Airedale engineer, carry a full Parts & Labour warranty for a period of 12 months from the date of commissioning or 18 months from the date of despatch, whichever is the sooner.

Parts or Equipment supplied by Airedale for installation within the UK or for Export that are properly commissioned in accordance with Airedale standards and specification, not commissioned by an Airedale engineer; carry a 12 month warranty on non consumable Parts only from the date of commissioning or 18 months from the date of despatch, whichever is the sooner.

Parts or equipment installed or commissioned not to acceptable Airedale standards or specification invalidate all warranty.

Warranty is only valid in the event that

In the period between delivery and commissioning the equipment:

- is properly protected & serviced as per the Airedale installation & maintenance manual provided
- where applicable the glycol content is maintained to the correct level.

In the event of a problem being reported and once warranty is confirmed* as valid under the given installation and operating conditions, the Company will provide the appropriate warranty coverage (as detailed above) attributable to the rectification of any affected Airedale equipment supplied (excluding costs for any specialist access or lifting equipment that must be ordered by the customer).

*Once warranty is confirmed, maintenance must be continued to validate the warranty period.

Any spare part supplied by Airedale under warranty shall be warranted for the unexpired period of the warranty or 3 months from delivery, whichever period is the longer. To be read in conjunction with the Airedale Conditions of Sale - Warranty and Warranty Procedure, available upon request.

Procedure

When a component part fails, a replacement part should be obtained through our Spares department. If the part is considered to be under warranty, the following details are required to process this requirement. Full description of part required, including Airedale's part number, if known. The original equipment serial number. An appropriate purchase order number.

A spares order will be raised under our warranty system and the replacement part will be despatched, usually within 24 hours should they be in stock. When replaced, the faulty part must be returned to Airedale with a suitably completed and securely attached "Faulty Component Return" (FCR) tag. FCR tags are available from Airedale and supplied with each Warranty order.

On receipt of the faulty part, suitably tagged, Airedale will pass to its Warranty department, where it will be fully inspected and tested in order to identify the reason for failure, identifying at the same time whether warranty is justified or not.

On completion of the investigation of the returned part, a full "Report on Goods Returned" will be issued. On occasion the release of this complete report may be delayed as component manufacturers become involved in the investigation. When warranty is allowed, a credit against the Warranty invoice will be raised. Should warranty be refused the Warranty invoice becomes payable on normal terms.

Exclusions

Warranty may be refused for the following reasons.

- Misapplication of product or component
- Incorrect site installation
- Incomplete commissioning documentation
- Inadequate site installation
- Inadequate site maintenance
- Damage caused by mishandling
- Replaced part being returned damaged without explanation
- Unnecessary delays incurred in return of defective component

Returns analysis

All faulty components returned under warranty are analysed on a monthly basis as a means of verifying component and product reliability as well as supplier performance. It is important that all component failures are reported correctly.

Head Office
Airedale International Air Conditioning Ltd
Leeds Road
Rawdon
Leeds LS19 6JY
Tel: +44 (0) 113 2391000
Fax:+44 (0) 113 2507219
E-mail enquiries@airedale.com
Web www.airedale.com